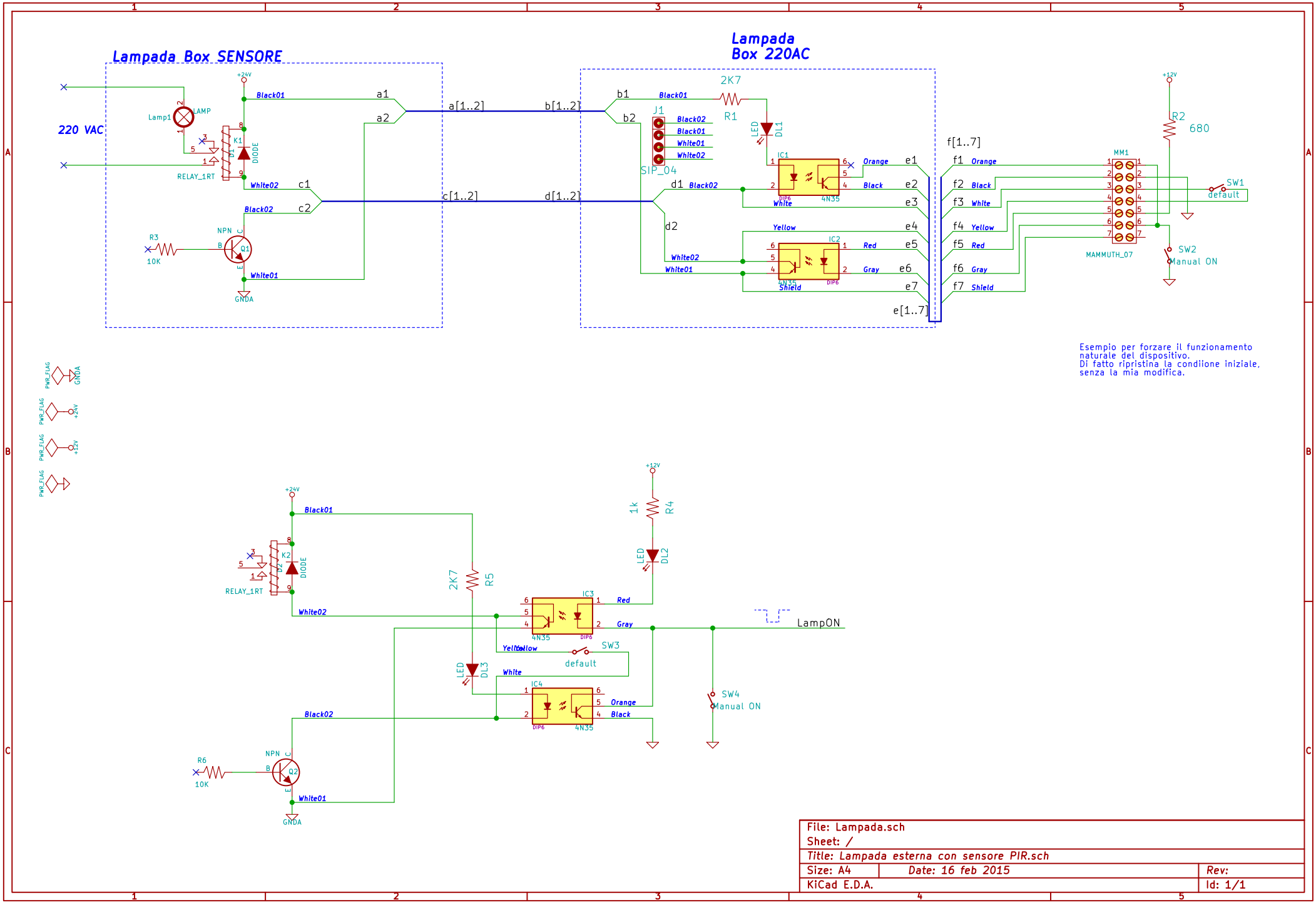

File: Lampada.sch		
Sheet: /		
Title: Lampada esterna con sensore PIR.sch		
Size: A4	Date: 16 feb 2015	Rev:
KiCad E.D.A.		Id: 1/1