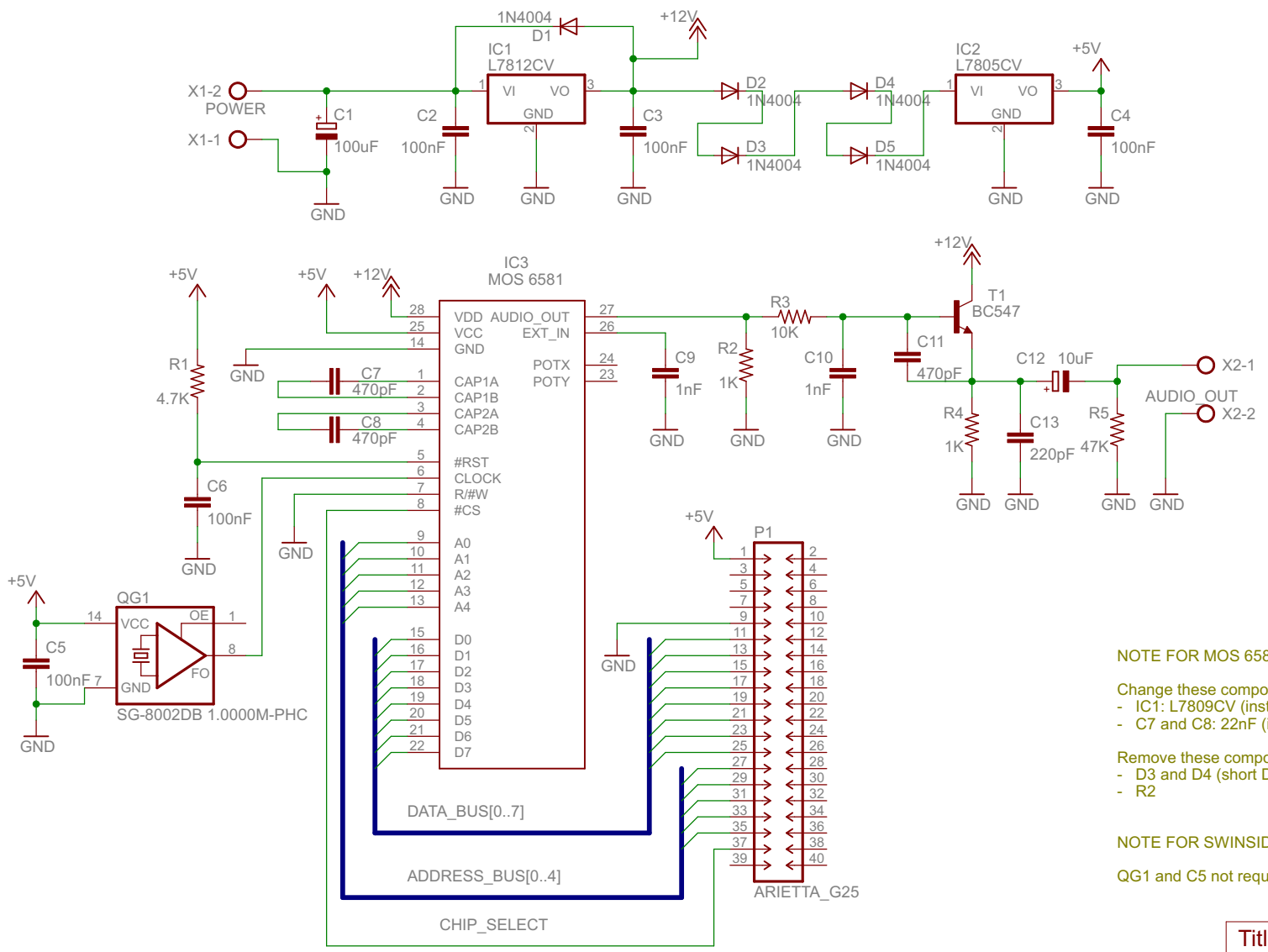

NOTE FOR MOS 6582/8580:

Change these components:
- IC1: L7809CV (instead of L7812CV) [IMPORTANT!]
- C7 and C8: 22nF (instead 470pF)

Remove these components:
- D3 and D4 (short D2 with D5)
- R2

NOTE FOR SWINSID:

QG1 and C5 not required

Title: SidBerry_AriettaG25	
Author: Alessio Lombardo	
05/08/2020 12:51:04	
Sheet: 1/1	Rev: 1