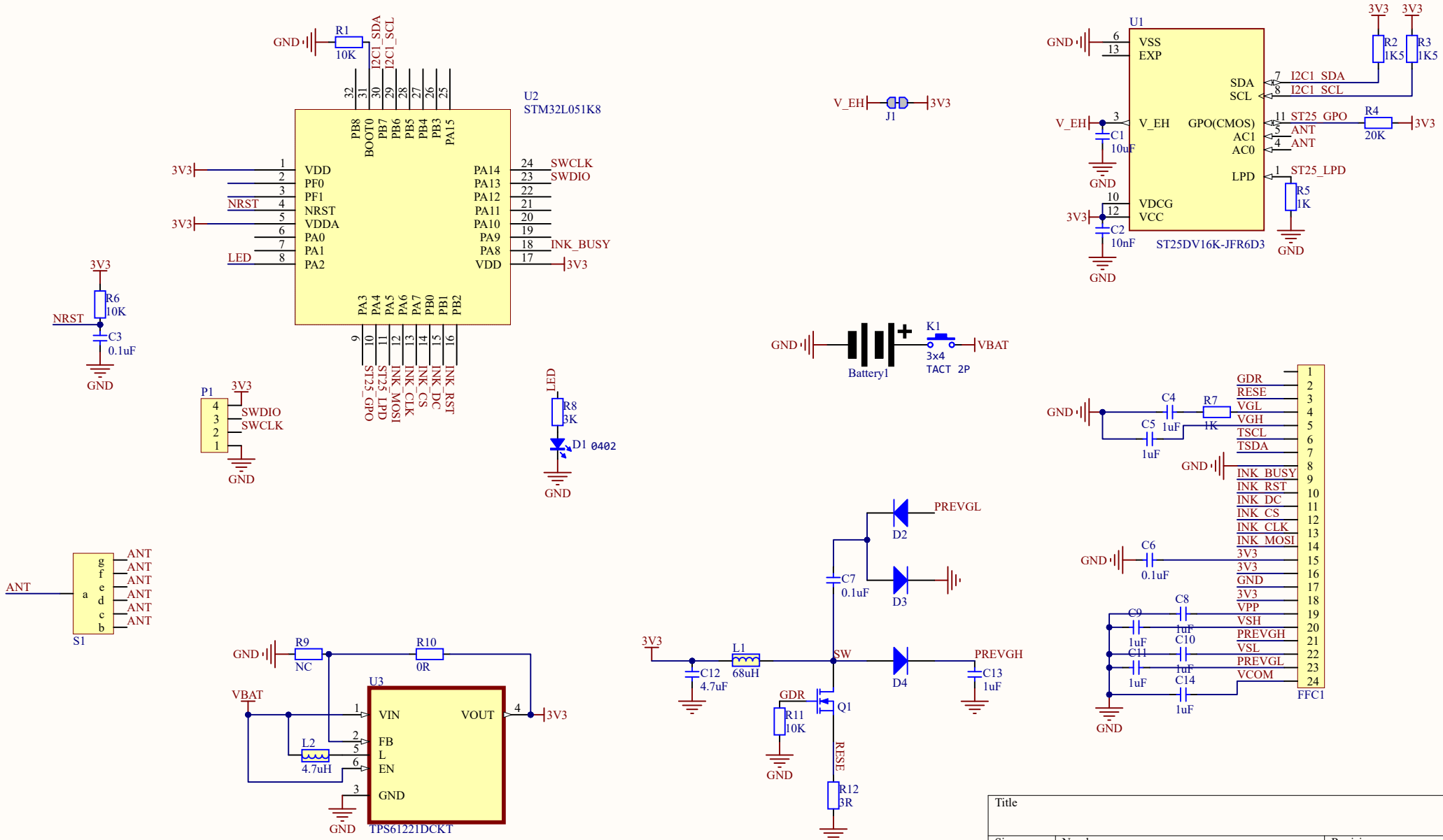

Title		
Size A4	Number	Revision
Date: 5/23/2024		Sheet of
File: C:\Users\levis\Downloads\L-ink.SchDoc		Drawn By: