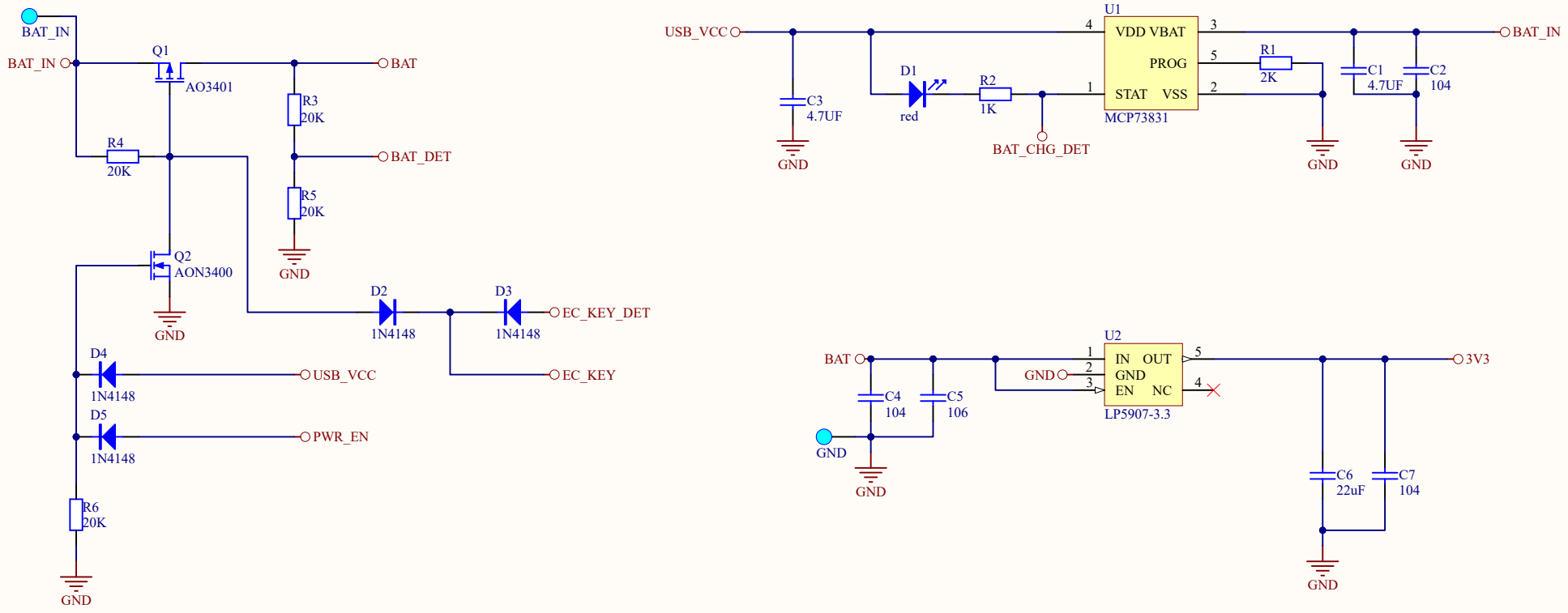

Title		
Size A4	Number	Revision
Date: 5/23/2024		Sheet of
File: C:\Users\..\X-Track_Power.SchDoc		Drawn By: