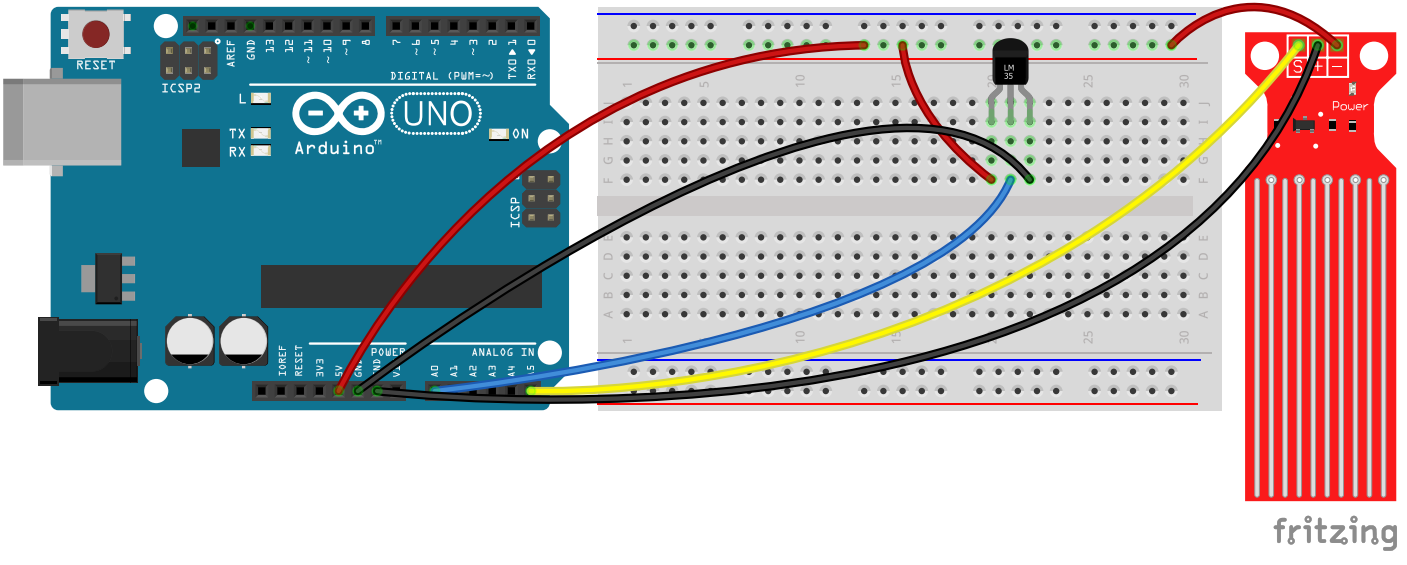
RESET
ICSP2
AREF
GND
13
12
11
10
9
8
7
6
5
4
3
2
TX→1
RX←0
DIGITAL (PWM=~)
L
TX
RX
UNO
Arduino
ON
ICSP
IOREF
RESET
3V3
5V
GND
GND
Vin
POWER
ANALOG IN
A0
A1
A2
A3
A4
A5
LM
35
S
+
-
Power
fritzing