ASSEMBLY INSTRUCTION

Item No.:AC05

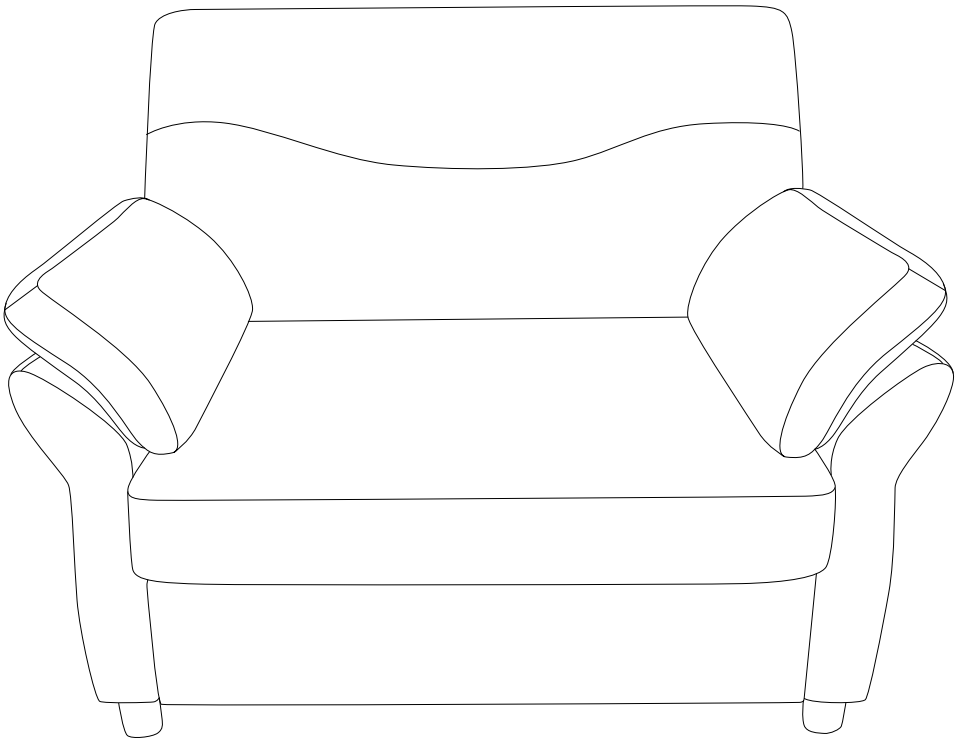

Components List

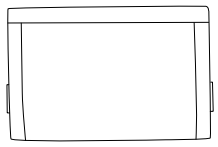

H X1

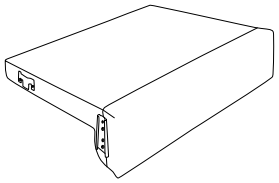

I X1

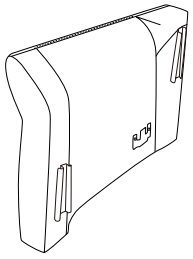

J-L X1

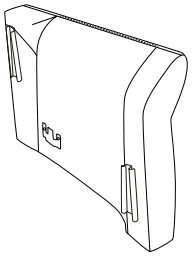

J-R X1

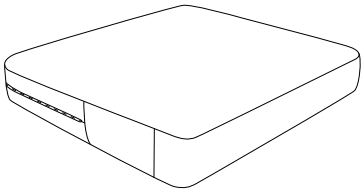

K X1

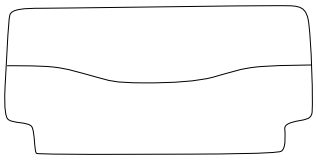

L X1

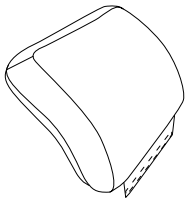

M-L X1

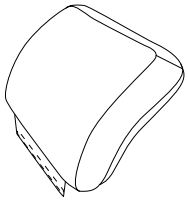

M-R X1

Hardware List

D

X4

STEP 1

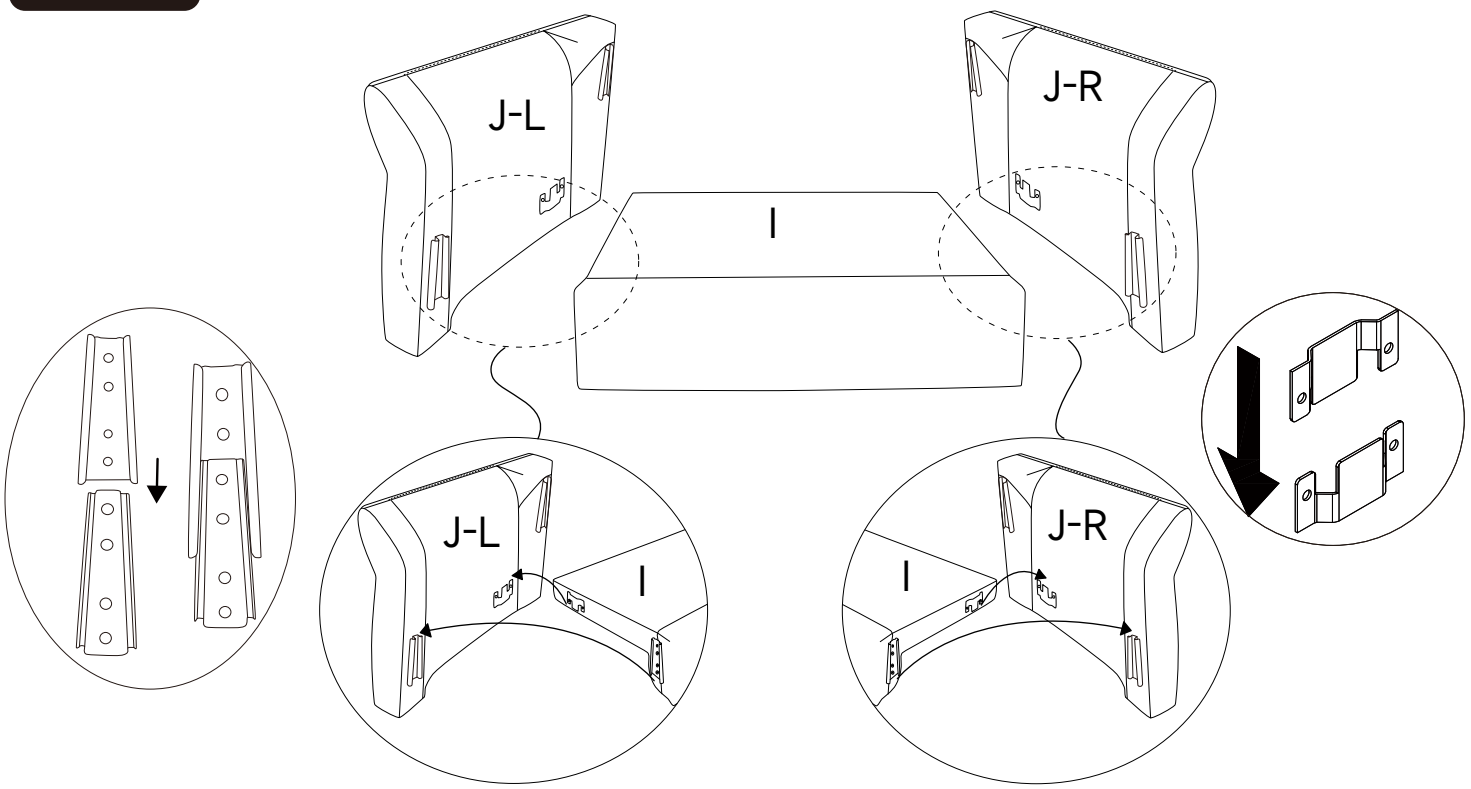

STEP 2

	DX4

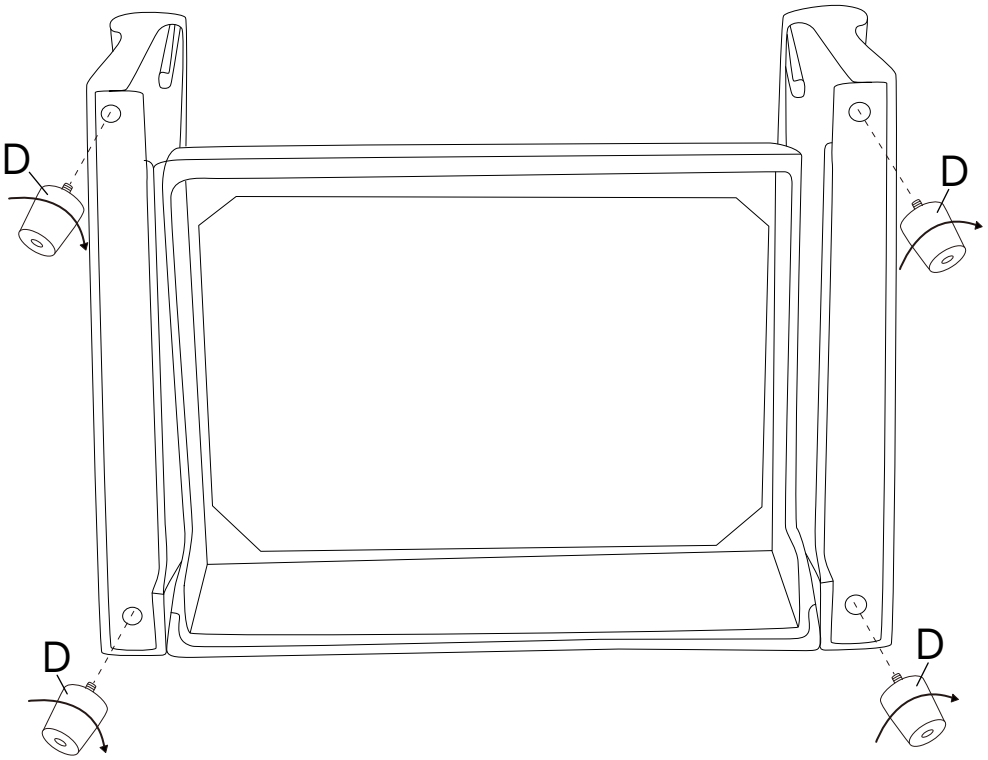

STEP 3

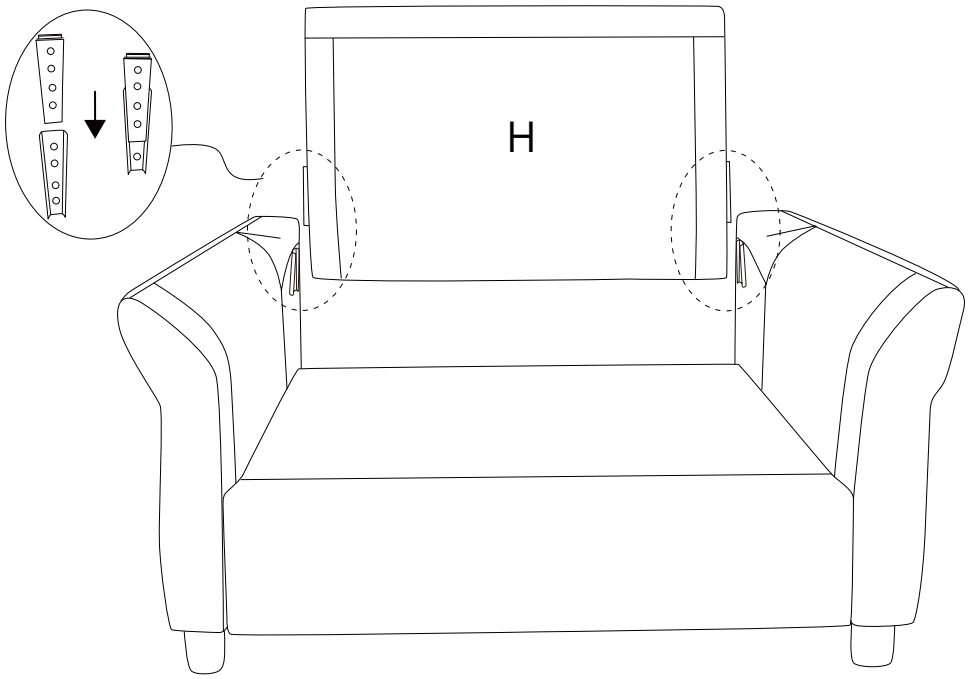

STEP 4

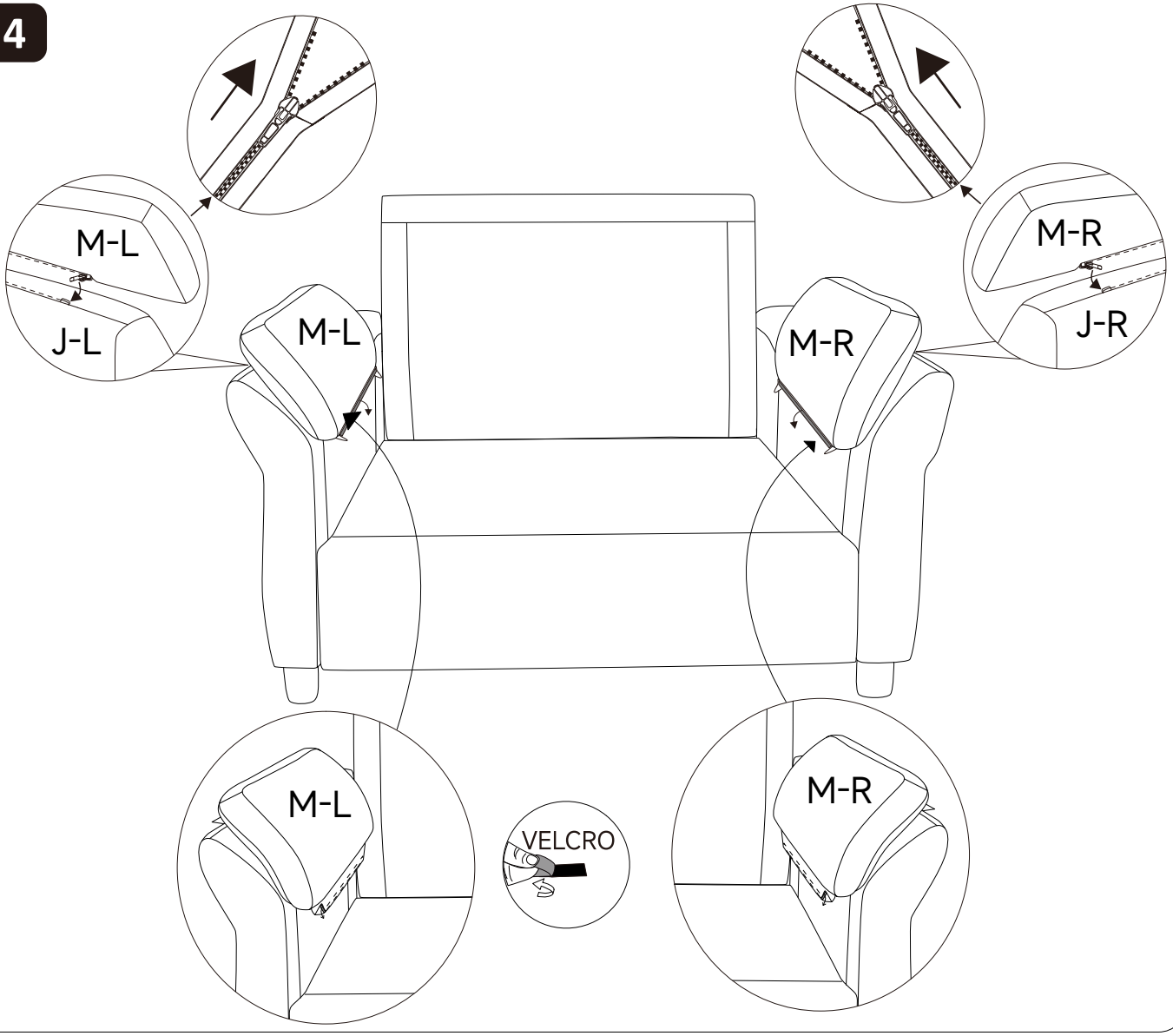

STEP 5

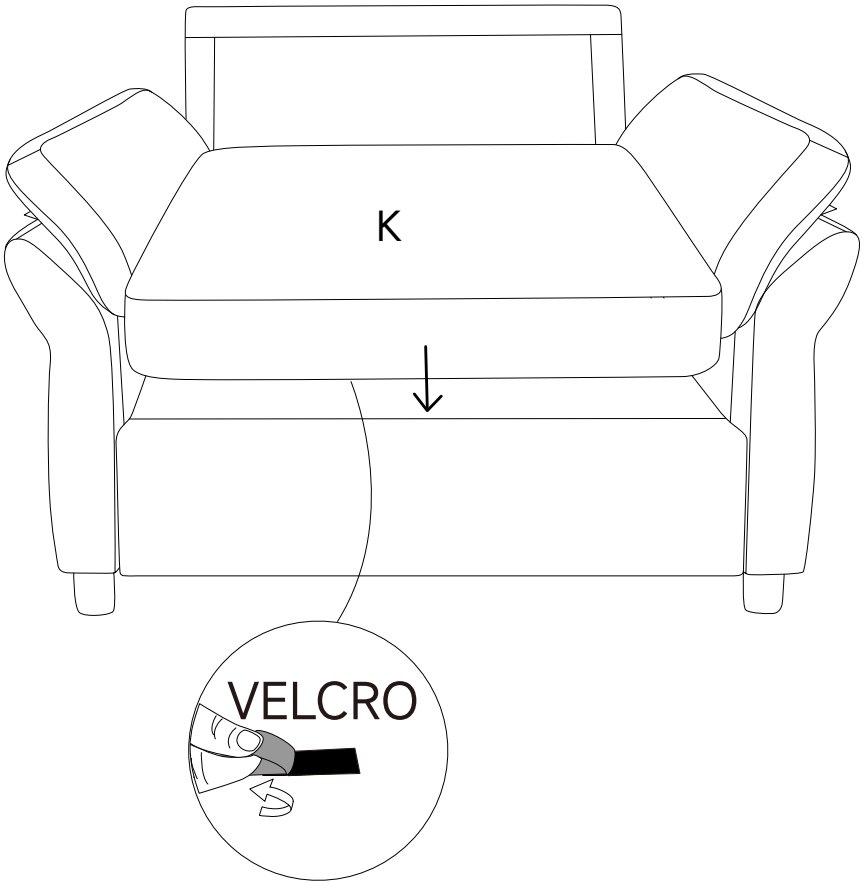

STEP 6

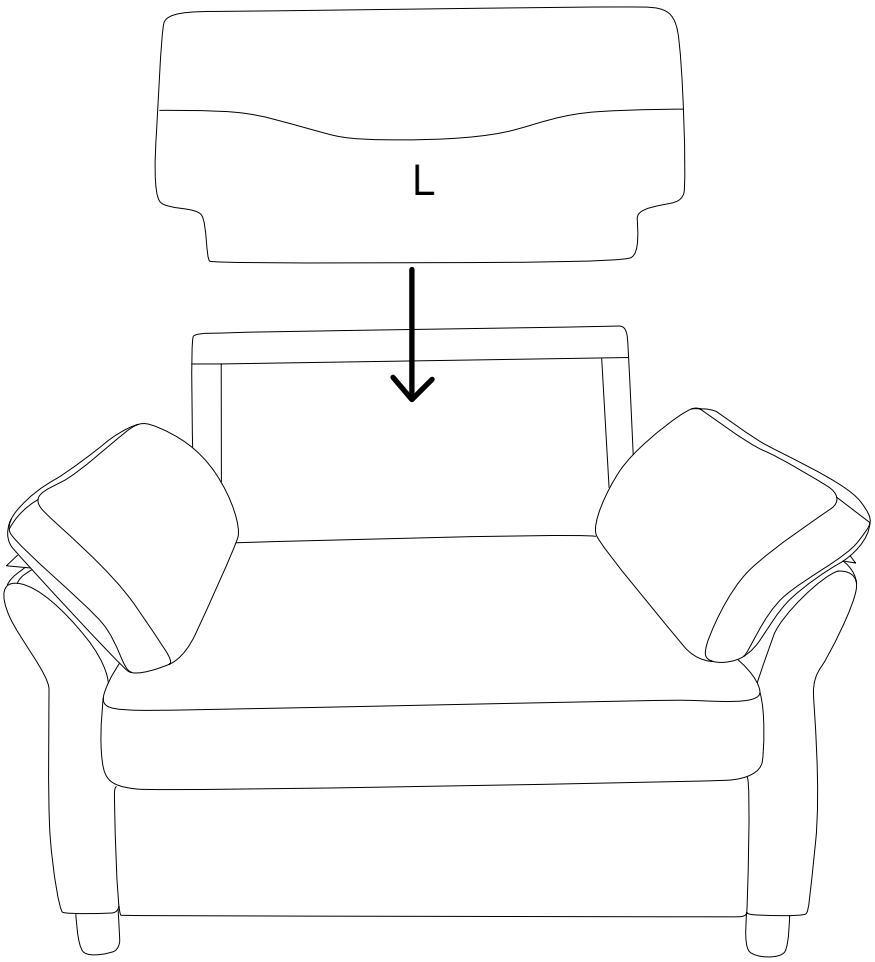

STEP 7

The cushion is in compression package . Just take out and plump up for hours . 48 hours is better for reaching its full size . Follow the assembly instructions to assemble after reach its full size .

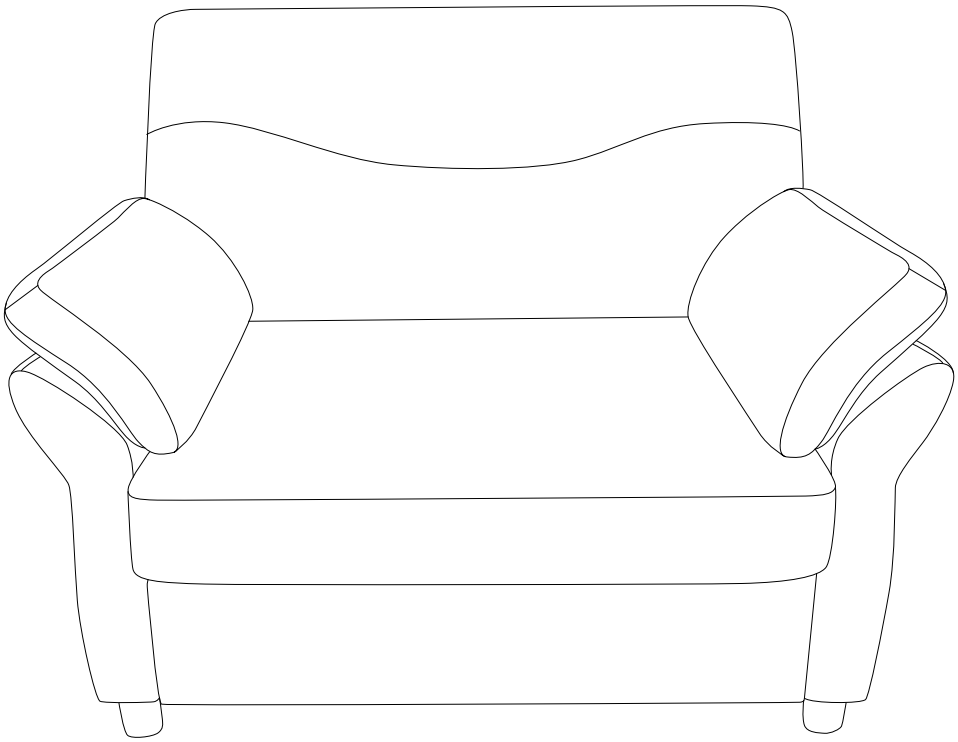

QUESTIONS? CONTACT US:

- Email:customerservice@hkfoam.com

If in any case, you are not 100% happy with the item received,would you please contact us first and give us a chance to make it right for you? All of our products are covered by warranty and we will do our best to address any of your concerns. We are dedicated to your 100% satisfaction with your order.