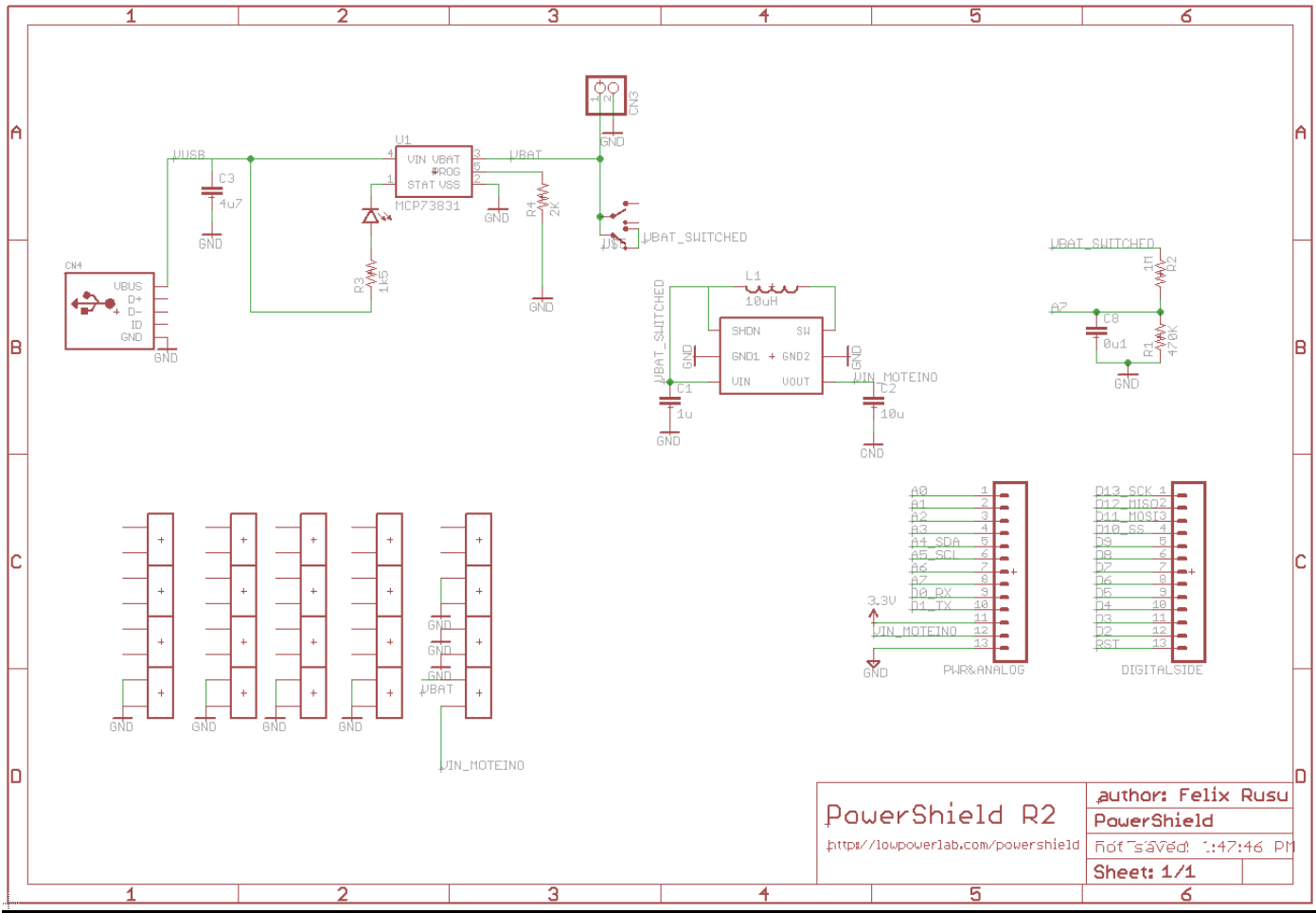
PowerShield R2
http://lowpowerlab.com/powershield
author: Felix Rusu
PowerShield
Sheet: 1/1
U1
MCP73831
VIN VBAT
PROG
STAT VSS
VUSB
VBAT
VBAT_SWITCHED
VIN_MOTEINO
CN4
VBUS
D+
D-
ID
GND
L1
10uH
SHDN
SW
GND1
GND2
VIN
VOUT
C1
1u
C2
10u
C3
4u7
R1
470K
R2
1M
R3
1M5
R4
2K
C8
0u1
CN3
PWR&ANALOG
DIGITALSIDE
3.3V

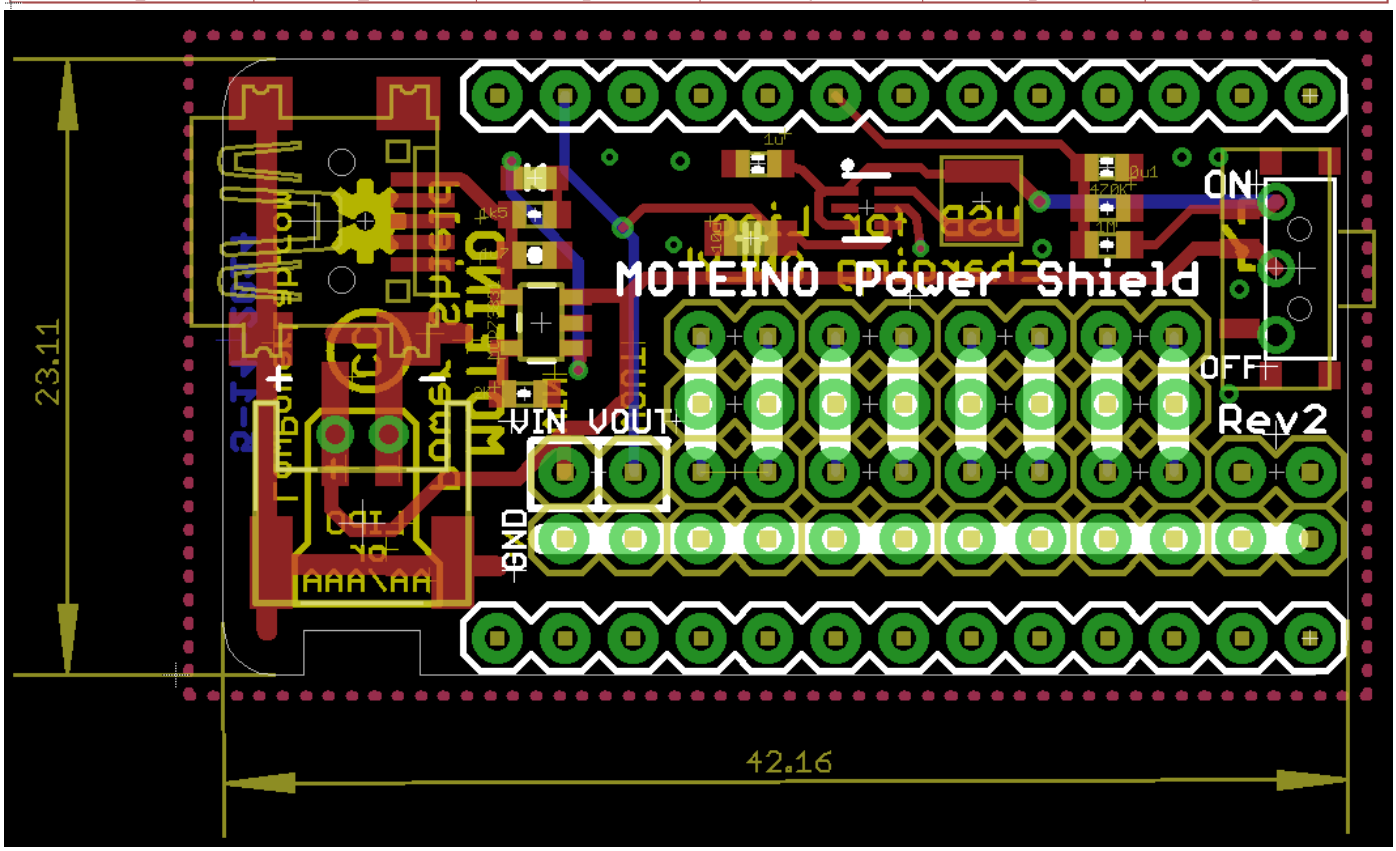
MOTEINO Power Shield
ON
OFF
Rev2
VIN VOUT
GND
23.11
42.16