KUSH THAKUR

Touch-Free Switch Control Panel for Elevators-Designed in KiCad

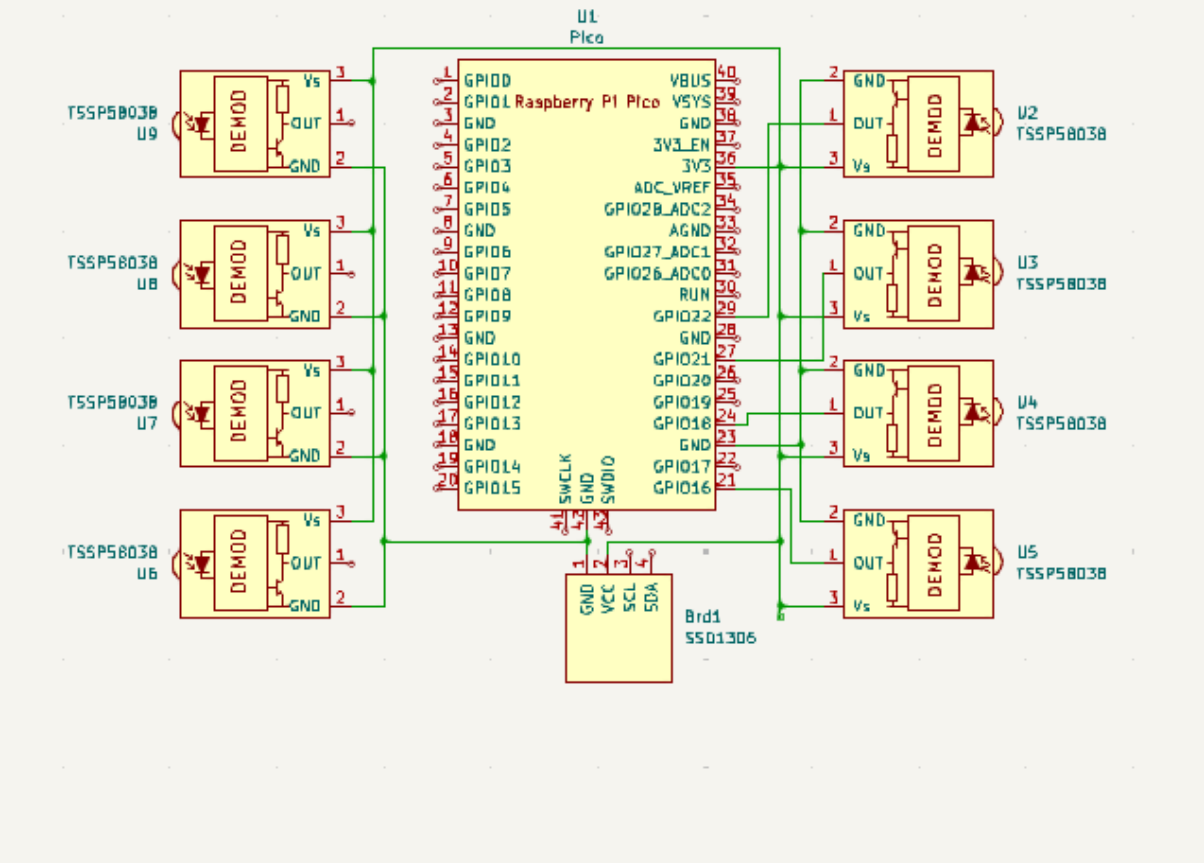

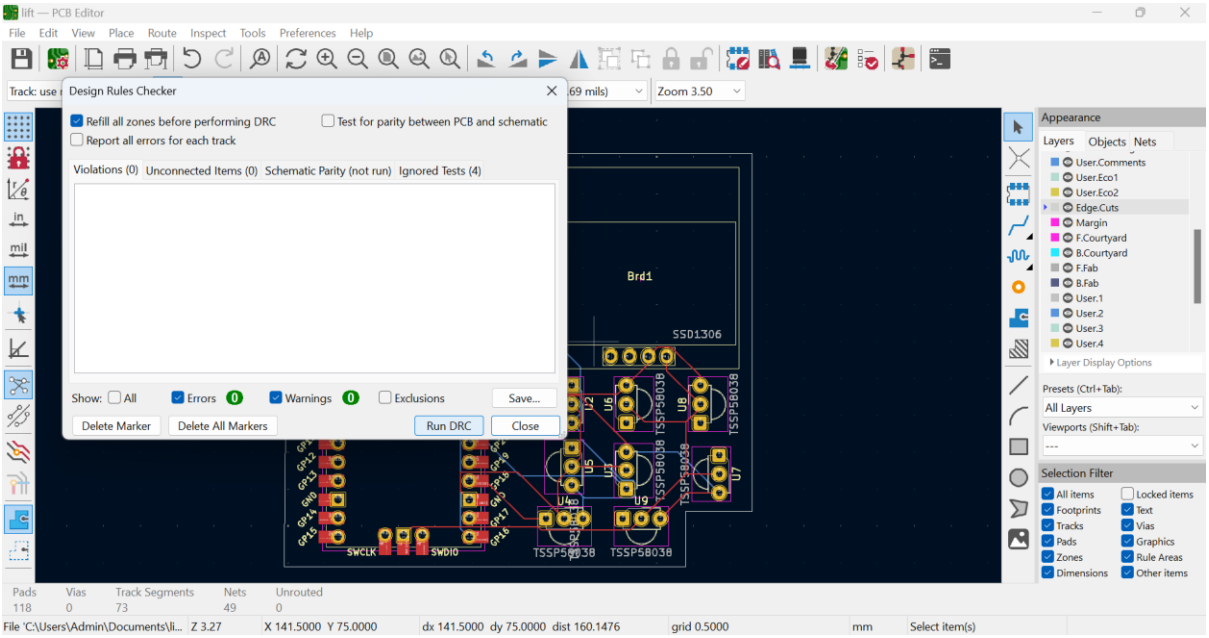

Fig 1: DRC

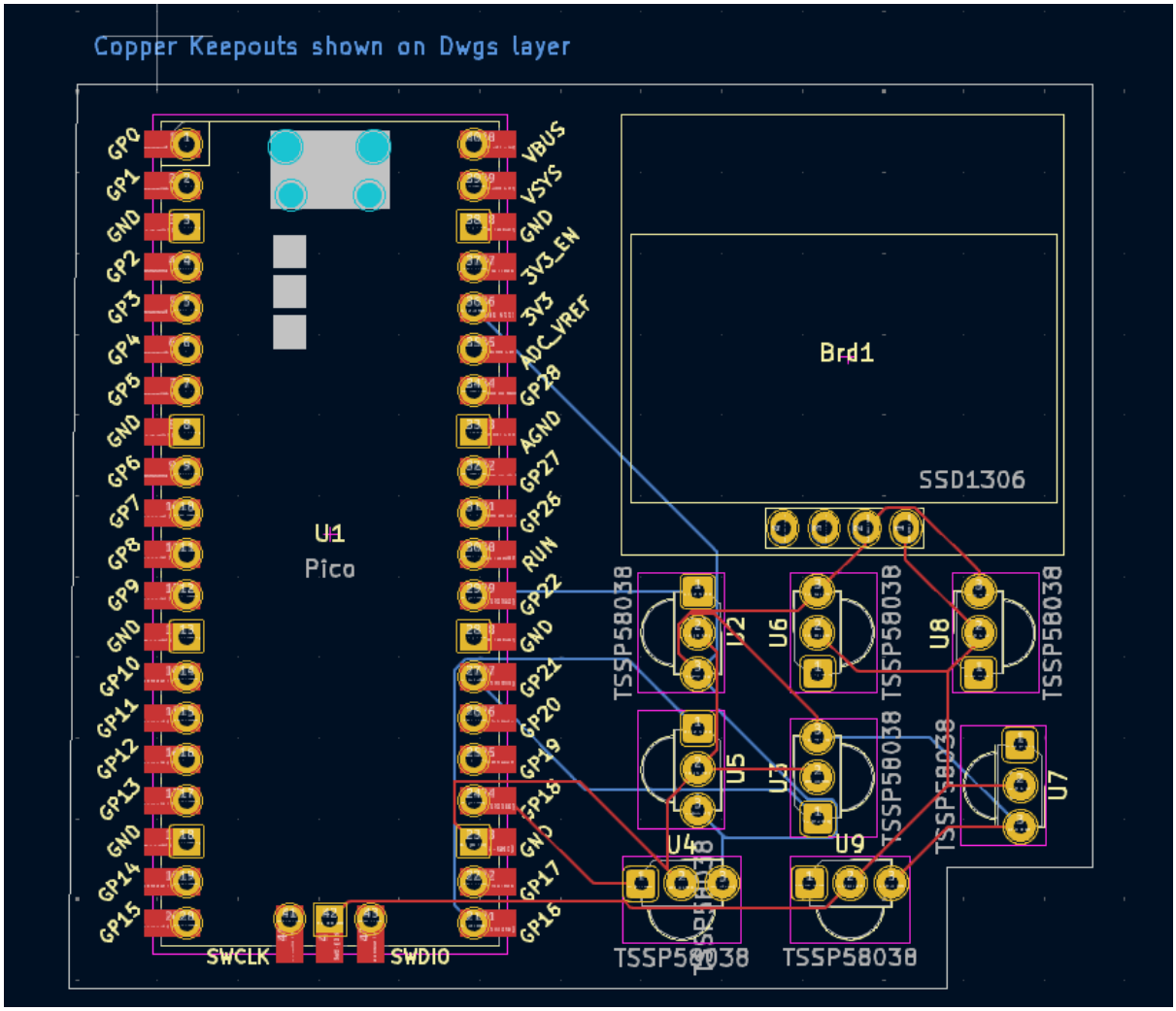
Copper Keepouts shown on Dwgs layer
U1
Pico
Brd1
SSD1306
SWCLK
SWDIO
TSSP58038
U2
U6
U8
U5
U3
U7
U4
U9

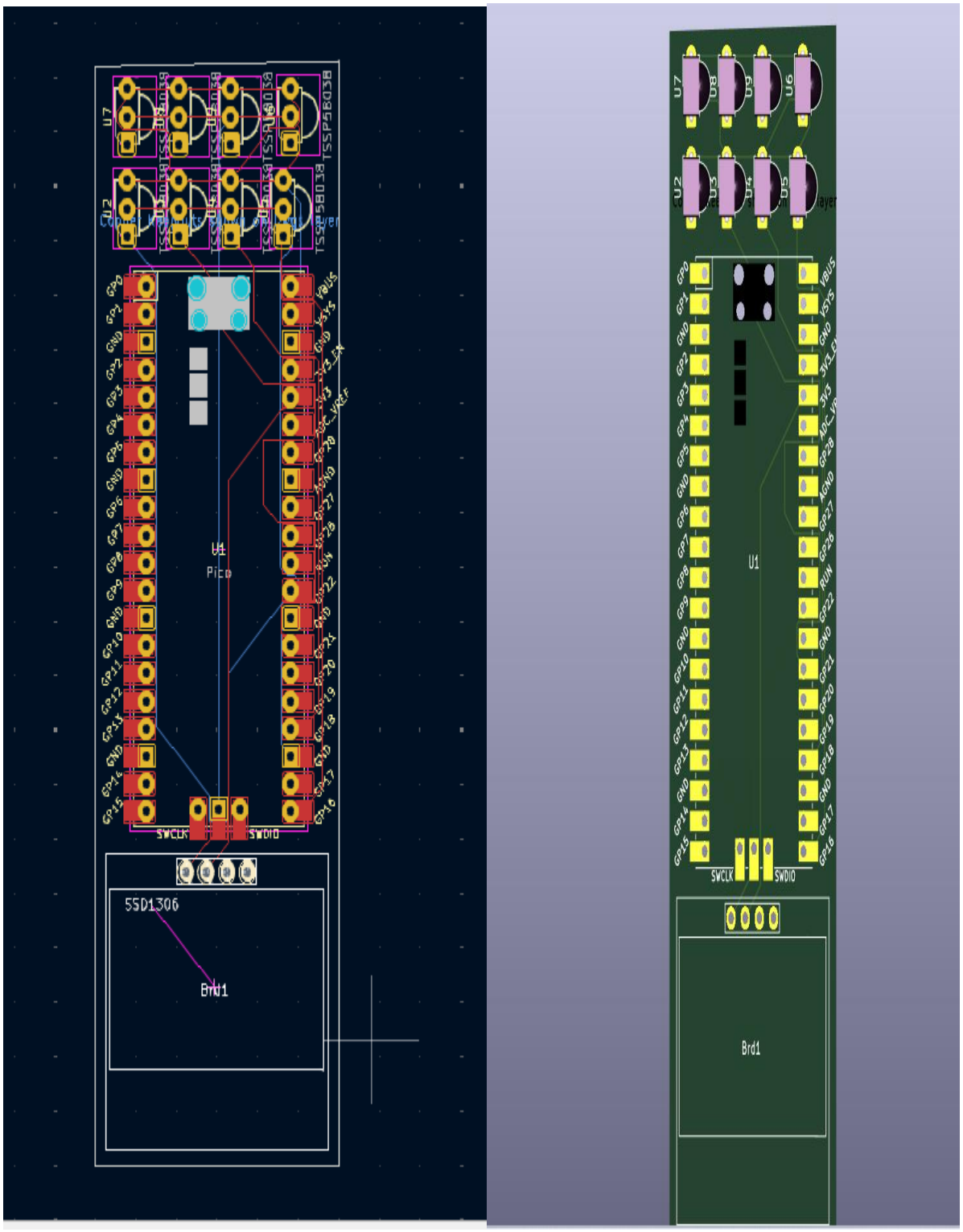
U7
U2
U1
Pico
SWCLK
SWDIO
SSD1306
Brd1
U7
U8
U9
U6
U2
U3
U4
U5
U1
SWCLK
SWDIO
Brd1