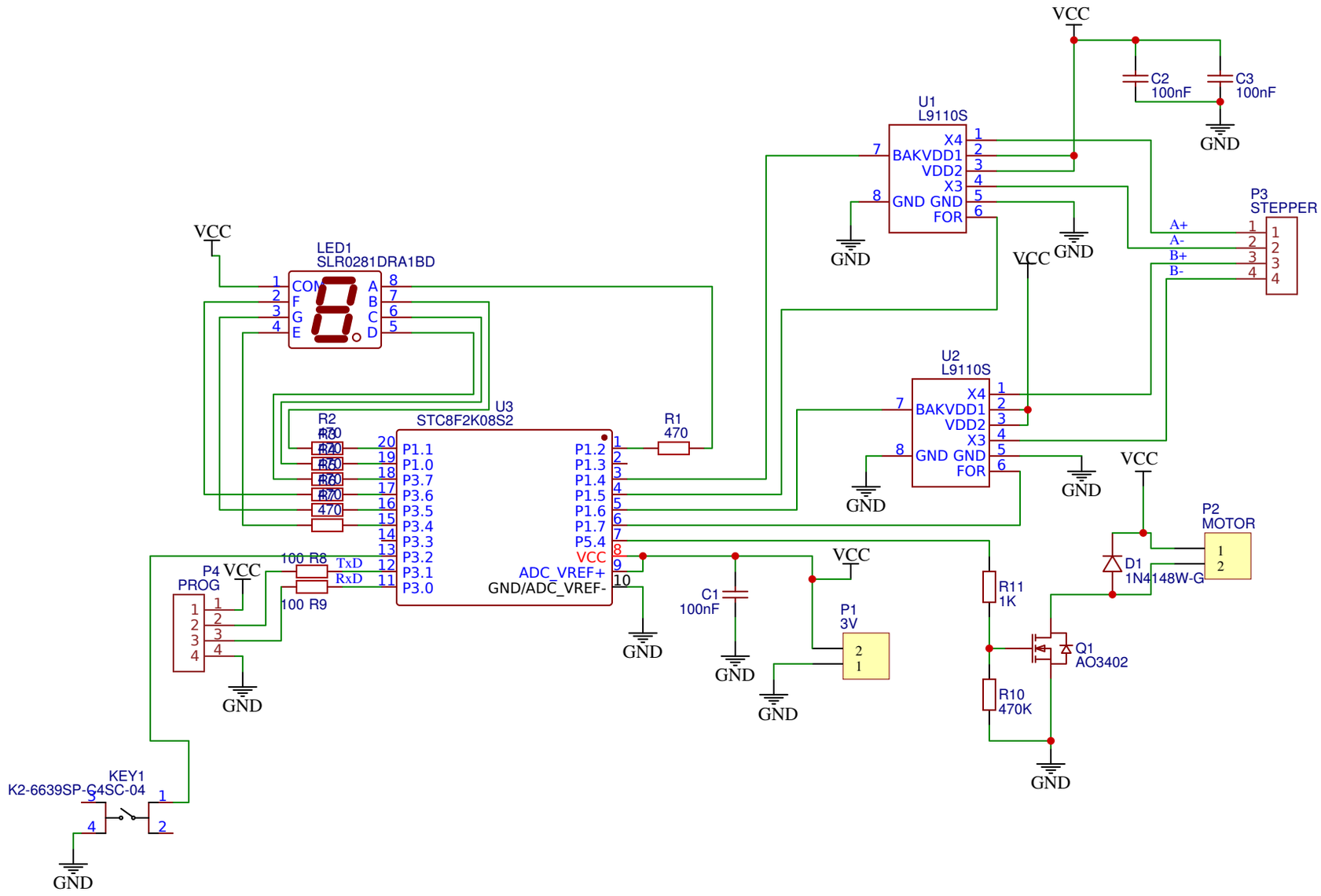

TITLE: Sheet_1		REV: 1.0
立创EDA	Company: Your Company	Sheet: 1/1
	Date: 2019-04-21 Drawn By: cpholzn	