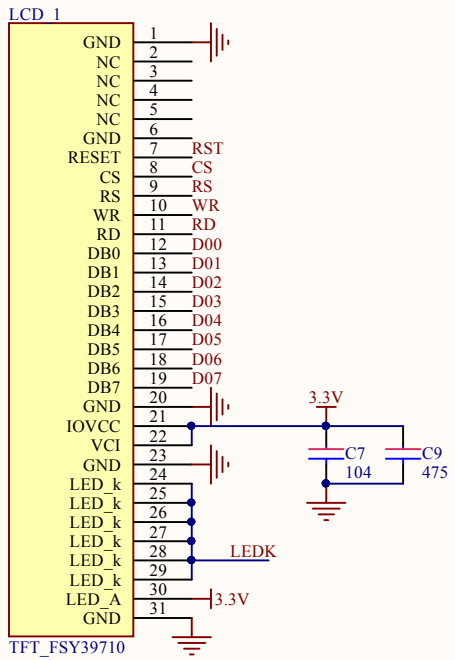

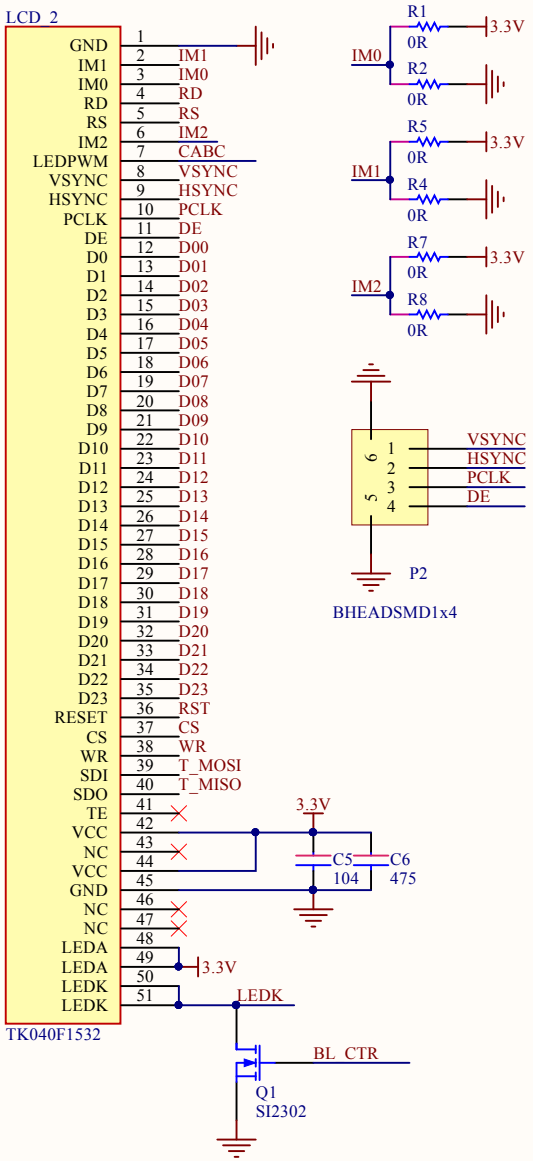

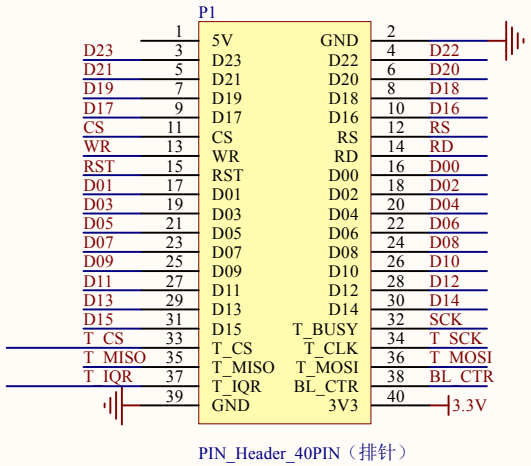

接口选择通过跳电阻的方式实现：

IM2 IM1 IM0 => 000 =>IIC
IM2 IM1 IM0 => 001 =>RGB888
IM2 IM1 IM0 => 010 =>XXX
IM2 IM1 IM0 => 011 =>XXX
IM2 IM1 IM0 => 100 =>MCU 8 位
IM2 IM1 IM0 => 101 =>MCU 16 位
IM2 IM1 IM0 => 110 =>MCU 18 位
IM2 IM1 IM0 => 111 =>MCU 24 位

Title		
Size A4	Number	Revision
Date: 2017-05-10		Sheet of
File: D:\Tiky hardware design\..\4.0寸 TK040F1532.SchDoc		Drawn By:

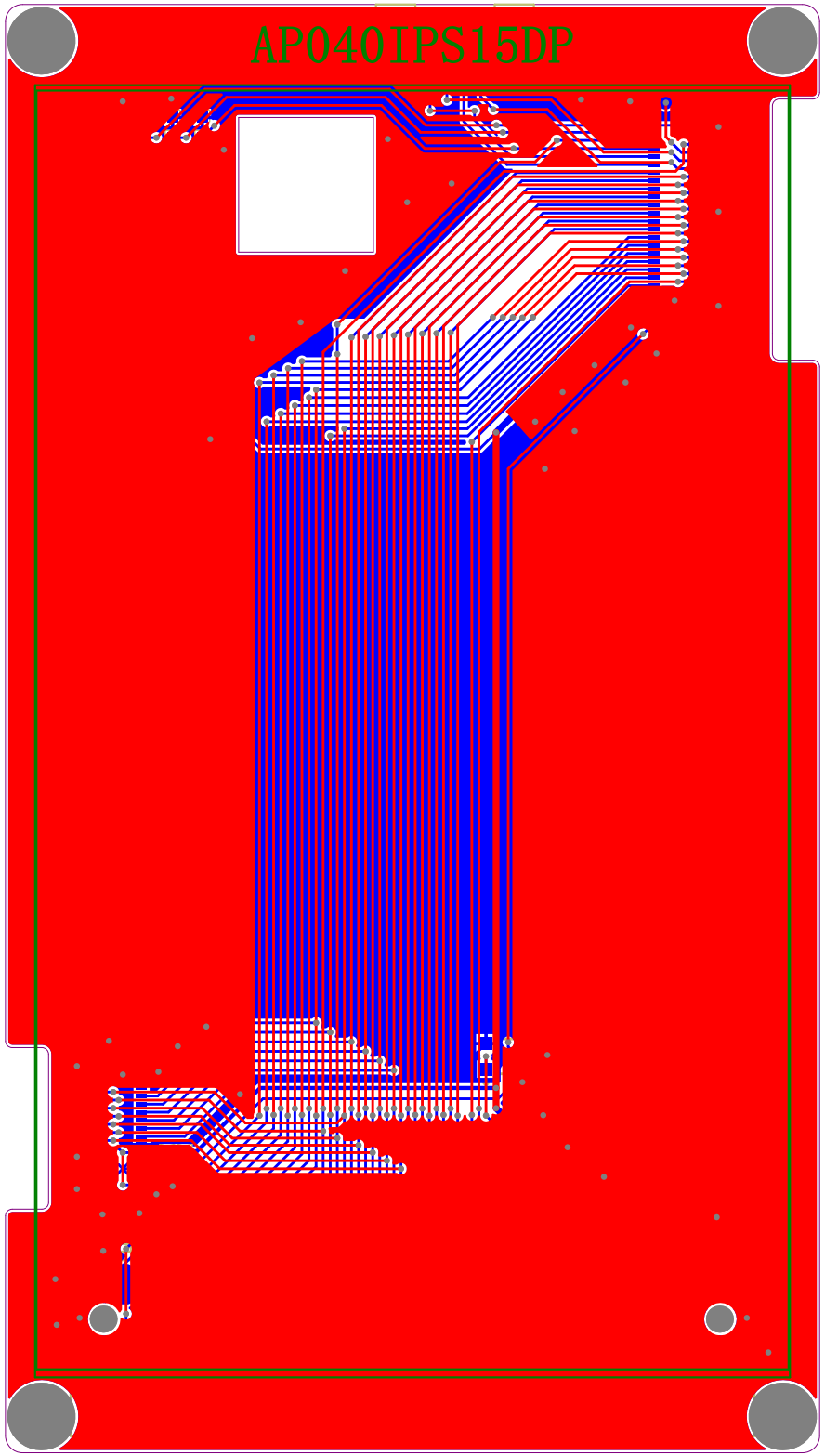
AP040IPS15DP