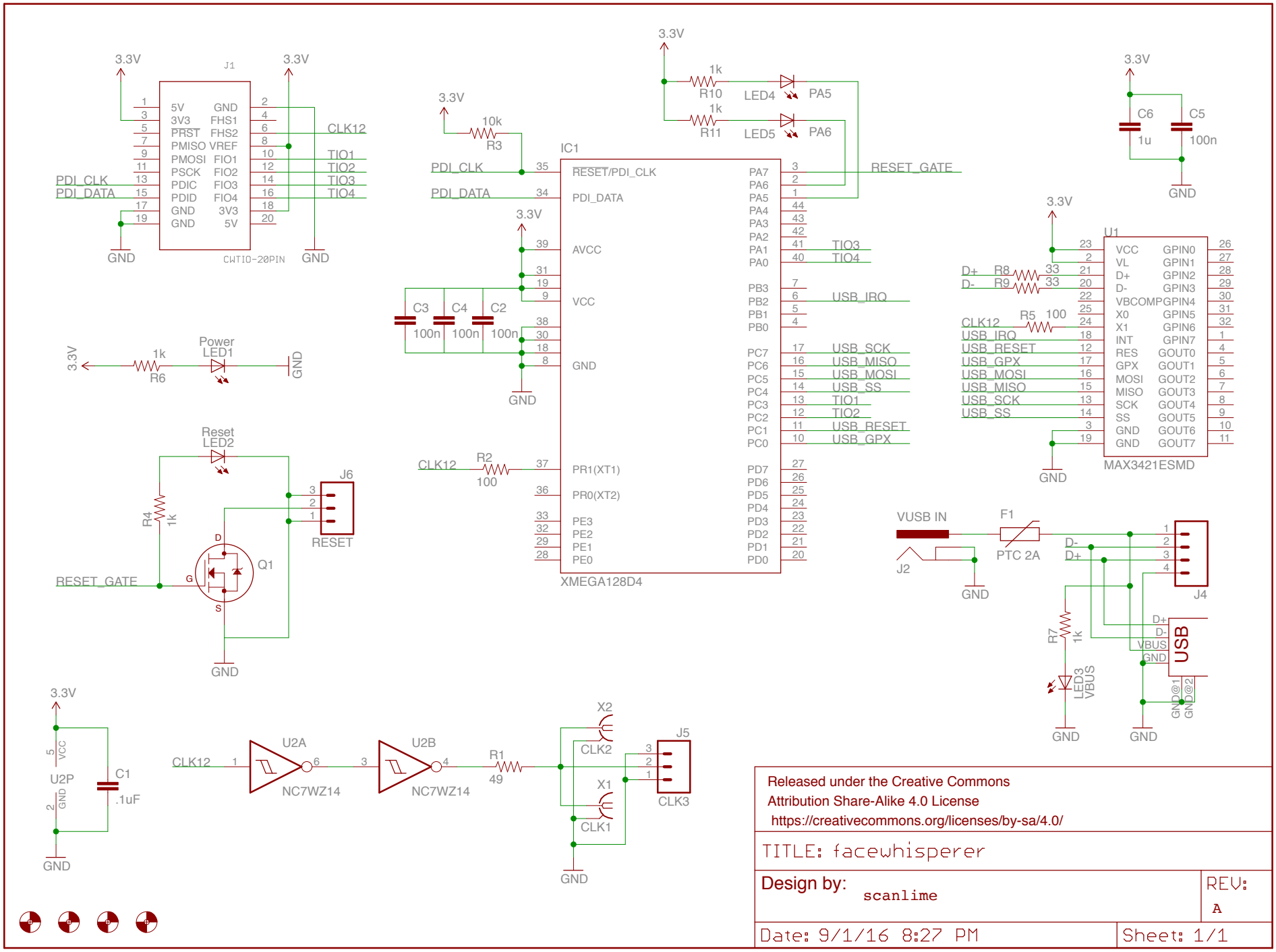

Released under the Creative Commons
Attribution Share-Alike 4.0 License
https://creativecommons.org/licenses/by-sa/4.0/

TITLE: facewhisperer

Design by: scanlime

REV: A

Date: 9/1/16 8:27 PM

Sheet: 1/1