2021 IEEE International Symposium on Circuits and Systems (ISCAS) | 978-1-7281-9201-7/20/$31.00 ©2021 IEEE | DOI: 10.1109/ISCAS51556.2021.9401323

A High-Performance OTA With Hybrid of Inverter-Based OTA and Nauta OTA For high Speed Applications

Ximing Fu[1], Kamal El-Sankary[1] and Yadong Yin[2]
[1]Electrical and Computer Engineering, Dalhousie University, Halifax, NS, Canada
[2]School of Physics and Information Engineering, Fuzhou University, Fujian 350000, China

***Abstract*— Operational transconductance amplifiers (OTAs) are widely employed as active elements in filters, data converters, and buffer amplifiers. Inverter-based implementation of OTAs is an attractive approach for low voltage realization of analog subsystems. However, there are still fundamental challenges such as how to simultaneously achieve high DC gain, bandwidth, speed, and good noise performance based on existing inverter-based OTA architectures. In this paper, a new two stage OTA, hybrid with current reuse inverter OTA and Nauta transconductor is proposed to improving performance by taking advantages of their own merits. The introduced architecture is keeping the merits of Nauta transconductor such as high bandwidth, high speed and the superior input referred noise performance of the current reuse inverter-based OTA. Furthermore, in order to reduce the PVT variations, bulk tuning circuits based on "detecting-feedback" loop applied on CMFB and the output stage of Nauta transconductor is proposed to dynamically tune the output DC levels under PVT variations. The proposed new hybrid OTA is implemented in 180nm CMOS technology and achieves very competitive performance compares with all inverter based OTAs and the other state-of-the-art OTAs.**

***Index Terms*— inverter based, Nauta transconductor, DC gain, low voltage, process variation tolerance, GBW, slew rate, input referred noise**

I. INTRODUCTION

Operational transconductance amplifiers (OTAs) are widely employed as active elements in filters, data converters, ADC drivers and buffer amplifiers. The OTA represents the main building block of many analog circuitry, and to achieve low-voltage operation with sufficiently high dc gain, bandwidth, speed, and superior noise performance at lower supply voltages is very challenging. The Nauta OTA [9] is a simple structure using several inverters which does not contain any internal nodes. Its remarkable performance has been proved to have larger DC gain, speed and lower power supply voltage and higher output swing [9]-[11]. However, several important drawbacks appear with the Nauta structures. Nauta transconductor relies on output conductance cancellation to achieve high DC-gain. In order to improve the conductance cancellation effect and reduce the influence by PVT variations, the Nauta transconductor must be designed in long channel MOS devices which defeat the purpose to achieve wider bandwidth and therefore makes it less attractive for high speed applications. Moreover, large input referred noise limits its

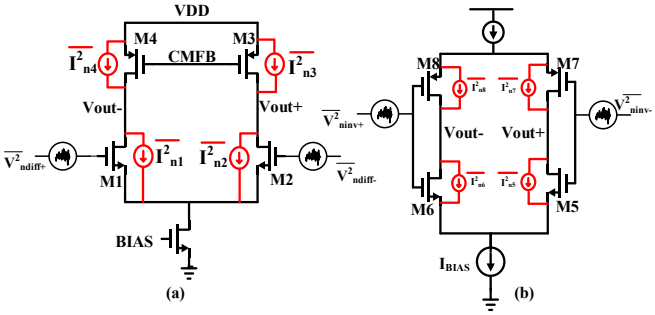

Fig.1 noise model in differential input pair (a) and (b) current reuse inverter-based OTA

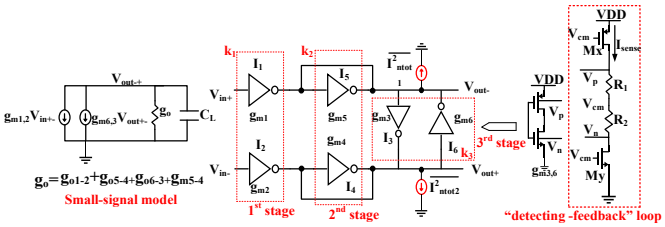

Fig.2 Nauta transconductor with PVT compensation and its small-signal model

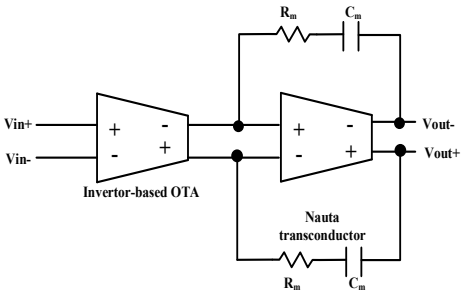

Fig.3 proposed two-stage OTA with hybrid inverter-based OTA and Nauta transconductor

applications such as in the communication systems or ADC driver Opamps which require good noise response from the OTAs.

Meanwhile, compares with conventional differential pair input OTAs, current reuse Inverter-based OTAs shows more superior noise performance than conventional class A/AB or two stage architectures. As it is shown in Fig.1. g_{m1} is assumed to be equal to the inverter transconductance $g_{m6} + g_{m8}$ for the sake of comparison. The noise factor (NF) for the inverter is much less than that for the corresponding differential pair. This is

Authorized licensed use limited to: Università degli Studi di Brescia. Downloaded on July 25,2024 at 08:59:20 UTC from IEEE Xplore. Restrictions apply.

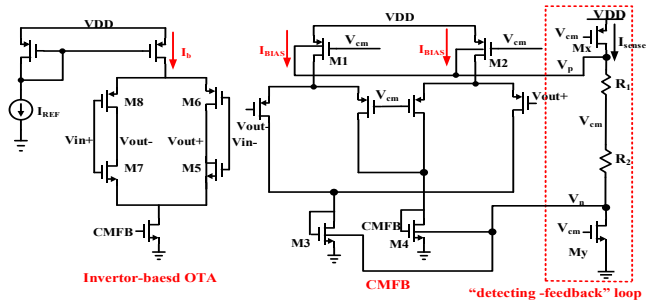

Fig.4 proposed current reuse inverter-based OTA with PVT compensation using "detecting feedback" loop

fundamentally because all the transistors in the inverter contribute both to the signal transconductance and to the noise whereas in the differential pair load transistor (M_3 and M_4) in Fig.1(a) contribute only to the noise. Besides, the inevitable drawbacks for current reuse Inverter-based OTAs is the need of a large input transistor size to achieve good noise response and larger gain. This introduces large parasitiscs and hence reduces the circuits speed and bandwidth. Meanwhile, two-stage OTA based on current reuse inverter-based OTA will achieve higher bandwidth and speed at the sacrifice of excessive power consumption which makes it less appealing to high speed applications.

To overcome the previous challenges, this paper proposes a hybird two-stage OTA combination (shown in Fig.3) which combines the current reuse inverter-based OTA for the first stage to have better input referred noise and Nauta transconductor in the second stage to improve gain and speed. Moreover, Bulk tuning circuits based on "detecting-feedback" loop is proposed to reduce the PVT variations in the proposed OTA. This paper is organized as follows. In Section II, the detailed analysis in terms of input referred noise, DC gain, and speed will be given for the proposed OTA. In Section III, the bulk biasing circuit and its working principle on how to improve the OTA PVT immunity will be analyzed. In Section IV, the post layout simulations based on two-stage current reuse inverter-based OTA, two-stage Nauta transconductor and the proposed architecture will be compared together to validate the proposed design principles. In Section V, the conclusion is drawn.

II. PROPOSED OTA DESIGN ANALYSIS

A. Noise analysis in current reuse inverter-based OTA, differential pair and Nauta transconductor

Because of the importance of the first stage in the total input referred noise, the total approximate input-referred noise of inverter-based OTA (Fig.1(b)) is calculated as the following:

$$\overline{V_n^2} = \frac{4KT\gamma}{g_{m8}+g_{m6}} + \frac{k_n}{W_8L_8C_{ox}f} + \frac{k_p}{W_6L_6C_{ox}f} \tag{1}$$

While for comparison with the conventional differential pair input stage in Fig.1(a), the input referred noise can be calculated as the following:

$$\overline{V_n^2} = 4KT\gamma\left(\frac{1}{g_{m1}} + \frac{g_{m4}}{{g_{m1}}^2}\right) + \frac{k_p{g_{m4}}^2}{W_4L_4C_{ox}{g_{m1}}^2f} + \frac{k_n}{W_1L_1C_{ox}f} \tag{2}$$

In the above equation γ is approximately 2/3, k is the Boltzmann constant and T is temperature in Kelvin. The effect of the flicker noise will be reduced by increasing the size of the transistors. However, as it is shown in the noise equivalent circuits model in Fig.2, Nauta transconductor has the dominant noise source from the thermal noise from the MOSFETs, Where $g_{mn} + g_{mp} = g_{minv}$ And the total output equivalent noise current as follows:

$$\overline{I_n^2} = 4KT\gamma \sum_{i=1}^{6} g_{minv} \tag{3}$$

From the total output equivalent noise current, the input referred noise can be derived as:

$$\overline{V_n^2} = \frac{4KT\gamma \sum_{i=1}^{6} g_{minv}}{{g_{mid}}^2} \tag{4}$$

$$g_{mid} = \left(V_{DD} - V_{thn} + V_{thp}\right)\sqrt{\beta_n\beta_p} \tag{5}$$

where $\beta_n = \mu_n C_{ox}\frac{W_n}{L_n}$, $\beta_n = \mu_p C_{ox}\frac{W_p}{L_p}$, V_{th} is the threshold voltage of the input transistors. g_{mid} is the first input transconductance of Nauta transconductor, Noise factor can be defined as NF.

$$NF_{diff} = \frac{1}{g_{m1}}\left(1 + \frac{g_{m4}}{g_{m1}}\right) \tag{6}$$

$$NF_{inv} = \frac{1}{g_{m6}+g_{m8}} \tag{7}$$

$$NF_{Nauta} = \frac{1}{g_{mid}}\left(\frac{\sum_{i=1}^{6} g_{minv}}{g_{mid}}\right) \tag{8}$$

as we can see from (6)-(8), the comparison result for Noise factor among the previously analyzed 3 cases are:

$$NF_{inv} < NF_{diff} < NF_{Nauta} \tag{9}$$

Based on (9), the Nauta transconductor is not appropriate as a first stage amplifier due to the excessive large input referred noise. Therefore, to achieve low input referred noise, the proper choice is to use current reuse inverter-based OTA as the first stage for optimum noise performance.

B. DC gain and Speed advantages

The proposed two-stage OTA in Fig. 3 is designed with a first stage using a current reuse inverter-based OTA and a second stage using a Nauta transconductor. The analysis in this section is to emphasize the advantages of DC gain, and speed for the combination between Nauta transconductor and current reuse inverter-based OTA. For high frequency applications, Nauta transconductor must be designed in short-channel transistors, resulting in a less effective conductance cancellation. Therefore, in order to achieve enough DC gain, a first stage OTA is required. Moreover, since the first stage inverter-based OTA is designed in large transistor sizes, Nauta transconductor will be deployed into the second stage to push the non-dominant pole far away from the dominant pole of the inverter-based OTA as far as the noise and bandwidth are concerned. By doing so, the miller compensation capacitor can be significantly reduced under the same phase margin.

According to the small signal analysis for Nauta transconductor the single stage AC response can be derived as (10) where R_{dm} refers to the differential-mode output resistance:

Authorized licensed use limited to: Università degli Studi di Brescia. Downloaded on July 25,2024 at 08:59:20 UTC from IEEE Xplore. Restrictions apply.

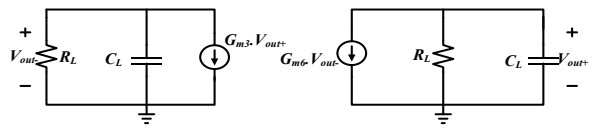

Fig.5 back to back Inverters linearized model during track and-latch of Nauta transconductor

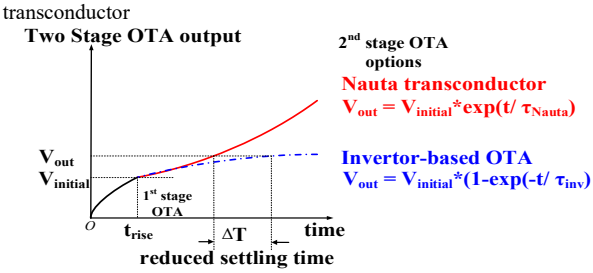

Fig.6 Settling time comparison between inverter-based OTA and Nauta transconductor

$$A_{v_nauta} = \frac{g_{mid}}{g_{dm}} = \frac{g_{mid}}{(g_{ds1}+g_{ds5}+g_{ds6}+g_{m5}-g_{m6})} \quad (10)$$

Fig.4 shows the structure of the proposed inverter-based low-voltage amplifier. The dc gain of a single stage inverter-based OTA is given by:

$$A_{invertor} \approx (g_{mn} + g_{mp})(r_{on}//r_{op}) \approx g_{mid} r_{out} \quad (11)$$

where g_m is the device transconductance, and r_o is the device. Compares between (10) and (11), it is clear that Nauta transconductor offers larger DC gain due to conductance cancellation under the same power. Therefore, the final voltage gain of the proposed 2-stage OTA is expressed as the following:

$$A_0 = \frac{0.5 r_o * m^2 \beta_n \beta_p}{g_{ds1}+g_{ds5}+g_{ds6}+K_2 g_{ds5}-K_3 g_{ds6}} \quad (12)$$

With reasonable assumptions made based on (13)-(14)

$$m = V_{DD} - V_{thn} + V_{thp} = constant \quad (13)$$

$$\beta_n \approx \beta_p \approx \beta_{n,p}\ , K_{1-3} = \frac{g_{m1-3}}{g_{ds1-3}} \quad (14)$$

Assume common-mode output currents is minimized, β_n should be chosen close to β_p. The dc gain is only limited by second stage mismatch. Moreover, Nauta transconductor introduced in the second stage will help us to improve speed and maintain bandwidth. The proposed OTA can maintain high speed without suffering from excessive power penalty, due to the absence of internal nodes of Nauta transconductor and the only parasitic poles are due to the finite transit time of the carriers in the MOSFET channel. This helps to reduce the miller compensation capacitor under the same phase margin, which proves it is a good choice to improve the bandwidth. Also, the proposed OTA architecture will significantly reduce small signal settling time introduced from Nauta transconductor, as it reduces the settling time by using its back-to-back inverter gain from the output compared to two-stage inverter-based OTA solution. This will reduce the second stage time constant in the transient phase and hence the overall OTA speed will be improved. To calculate the OTA speed improvement, the two pair of inverters at the output of Nauta transconductor with $G_{m1} = g_{m3}$ and $G_{m2} = g_{m6}$ are assumed in the linear mode as it is shown in Fig.5. Each of the inverters can be linearized as a voltage controlled current source driving the RC output load and its KCL equation can be written:

$$G_{m1,2}, V_{x,y} = -C_L \frac{dV_{y,x}}{dt} - \frac{V_{y,x}}{R_o} \quad (15)$$

The solution is given as the following:

$$(A_{v3} - 1)\, V_x - (A_{v6} - 1)\, V_y = \tau \frac{d\Delta V}{dt} + \Delta V \quad (16)$$

Where A_{v3} and A_{v6} are the gain of the first and second inverter respectively. τ is the output time constant, $\Delta V = V_x - V_y$ is the start-up voltage difference at the output from the first stage. By designing $A_v = A_{v3} = A_{v6}$, the second stage back-to-back inverter output gain can be simplified as:

$$A_{btb} = exp(\frac{A_v - 1}{\tau} t) \quad (17)$$

To observe the final settling time reduction of the proposed OTA, start with the general open loop transfer function as :

$$A_{vopen}(s) = \frac{A_0}{(1+\frac{s}{\omega_1})(1+\frac{s}{\omega_2})} \quad (18)$$

the Nauta transconductor reduces the settling time of the proposed OTA by the inverter gain as it is shown in Fig.6. Closed loop transfer function is derived as:

$$A_{vclosed}(s) = \frac{A_{vopen}(s)}{1+A_{vopen}(s)} = \frac{A_0 \omega_1 \omega_2}{A_0 \omega_1 \omega_2 + (s+\omega_1)(s+\omega_2)} \quad (19)$$

While the CMOS two-stage Miller-compensated OTA can be considered as a second-order system in the closed loop. the transfer function can be approximated as:

$$A_{vclosed}(s) = \frac{\frac{A_0}{1+A_0}\omega_n{}^2}{s^2 + 2\delta\omega_n s + \omega_n{}^2} \quad (20)$$

$$\omega_n{}^2 = (A_0 + 1)\omega_1 \omega_2 \quad (21)$$

$$2\delta\omega_n = \omega_1 + \omega_2 \quad (22)$$

δ and ω_n are refers as the damping factor and natural frequency. Noticing that the damping factor is a function of ω_2, and assume $\omega_1 << \omega_2$ δ can be approximated as (23)

$$\delta = \frac{\omega_1 + \omega_2}{2\omega_n} = \frac{\omega_1 + \omega_2}{2\sqrt{(A_0+1)\omega_1\omega_2}} \approx \frac{\omega_2}{2\sqrt{GBW\omega_2}} \quad (23)$$

Due to the second stage time constant reduction in the time-domain, the time constant has been reduced by $\frac{\tau_2}{A_v - 1}$, which causes δ to increase by $\sqrt{A_v - 1}$. Meanwhile, complex poles $s_{1,2} = -\delta\omega_n \pm \sqrt{\delta^2 - 1}\omega_n$, and $\omega_d = \sqrt{\delta^2 - 1}\omega_n$ which refers to the damping frequency and hence settling time is approximated as in (24), which is obviously been reduced.

$$T_d = \frac{2\pi}{\omega_n\sqrt{\delta^2 - 1}} \approx \frac{2\pi}{\sqrt{GBW\omega_2}\sqrt{(A_v - 1)\delta^2 - 1}} \text{ and } \omega_2 > 4GBW \quad (24)$$

III. PVT COMPENSATED BIASING CIRCUITS

Bandgap reference voltage is used for generating a mid-supply common-mode voltage V_{cm}. A simple "detecting-feedback" bulk tuning circuit (shown in Fig.2 and Fig.4) is used for reducing the PVT variations. Since without effective compensating biasing scheme, the proposed OTA are not immune to PVT variations because of changing I_{bias} in the CMFB and the output current from Nauta transconductor under process variations. This would influence the output common mode level in the first stage which deteriorates the common mode level deviation of proposed OTA output. This may cause significant change on the entire OTA performance. As an example, when I_{bias} of the CMFB in Fig.4 changes, the

Authorized licensed use limited to: Università degli Studi di Brescia. Downloaded on July 25,2024 at 08:59:20 UTC from IEEE Xplore. Restrictions apply.

detecting transistor Mx,y current I_{sense} changes in the same direction. Therefore, the parameter fluctuation of CMFB is compensated by the setup of a "detecting-feedback" loop. When process corner is ff or fs (increased power consumption), the detected current I_{sense} reaches the maximum. The relationship $V_{P,n} = V_{cm}$ (+-) $I_{sense} \times R_{1,2}$ will change the feedback bulk voltage in the opposite direction for M_{1-2} , M_{3-4} to decreases power consumption. When process corner is ss or sf (reduced power consumption), The feedback signal V_{Bulk} arrives at the bulk of $M_{1,2}$, M_{3-4} will adjust their values accordingly, leads to a decrease in the V_{th} as well as an increase in the transconductance. Therefore, the DC level fluctuation of the proposed OTA is compensated by the setup of a "detecting-feedback" loop and robustness of the circuit is improved.

IV. PROPOSED OTA LAYOUT AND POST LAYOUT SIMULATIONS

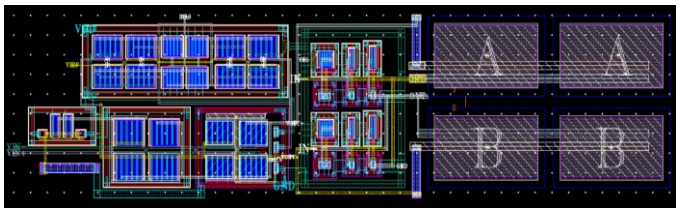

Fig.7 proposed two-stage OTA layout

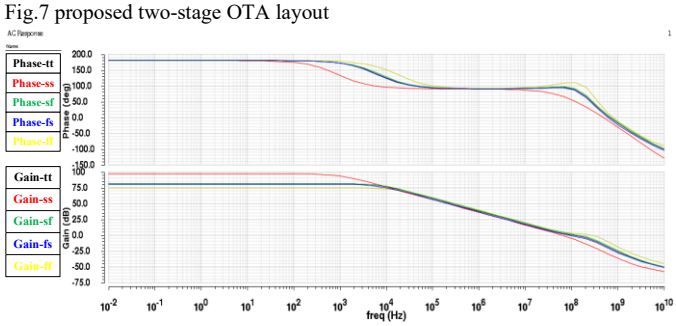

Fig.8 proposed OTA AC response under 5 different process corners

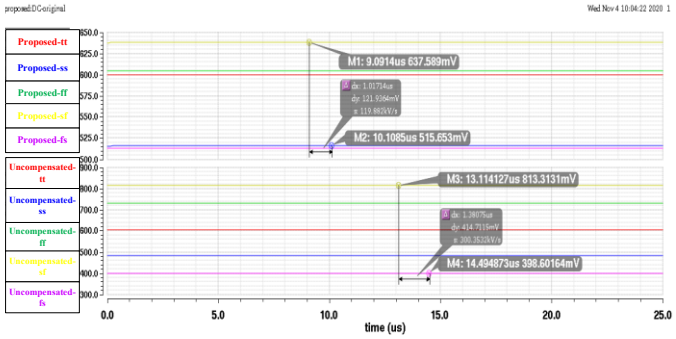

Fig.9 proposed OTA "detecting feedback" loop PVT compensation for common mode level deviations under 5 different process corners

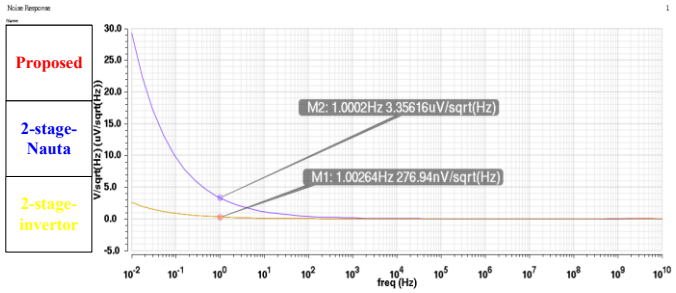

Fig.10 noise response comparison between proposed OTA, two-stage current reuse inverter-based OTA, two-stage Nauta transconductor OTA

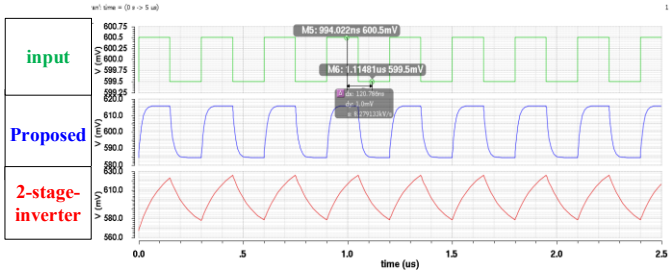

Fig.11 settling time comparison between 2stage inverter-based OTA and proposed architecture in closed loop configuration

A prototype of proposed two-stage OTA is designed in 180nm CMOS technology where Fig.7 shows its layout. Fig.8 shows the proposed OTA AC response for 5 different corners under 1.2V power supply. It is clear that the proposed OTA architecture is immune to PVT variations due to the proposed "detecting feedback" loop compensation. The nominal DC gain is designed to be 81dB with open loop bandwidth 140MHz under 5pF load capacitor. Fig.9 shows the proposed "detecting feedback" loop PVT compensation for proposed two-stage OTA, the common mode level has been accurately calibrated and improved under worst case corners. Fig.10 shows the noise response comparison with 2-stage inverter-based OTA, 2-stage Nauta transconductor and proposed hybrid OTA architecture. The input referred noise is greatly improved to have inverter-based OTA as the first stage. Fig.11 shows the settling time can be much better to have second stage OTA as Nauta transconductor compared with 2-stage inverter-based OTA. Finally, Table I shows of the performance comparison of the proposed OTA with state-of-art designs.

TABLE I
Summary Of Results and Comparison With Other Works

Parameter	***This work**	**[1]	**[2]	**[3]	**[4]	**[5]	**[6]
Technology	**180nm**	180nm	180nm	180nm	130nm	350nm	180nm
Supply	**1.2**	3.3	0.9	0.7	1.2	2	1.2
Power(uW)	**300**	1380	80	25.4	210	----	1.17
A0(dB)	**81**	68	90	57.5	70	45	33
GBW(MHz)	**140**	21	12.5	3	35	2.3	182Hz
SR+-(V/us)	**23/43**	22/24	31/28	1.8/3.8	19.5/-	18/20	----
Input referred noise	**2uVrms (0.1Hz-10KHz)**	----	27nV/$\sqrt{Hz}$ @1MHz	100nV/$\sqrt{Hz}$	14.14nV/$\sqrt{Hz}$	----	0.34 uVrms
THD	**<1% (-44dB)**	-54dB	-50dB	<1%	----	-68dB	1.5%
FOM(MHz*pF/mW)	**2333**	456	2250	2360	1750	----	2500

*Post Layout Simulations **Measurement Results

VI. CONCLUSION

In this paper, the proposed new two-stage OTA using two-stage current reuse inverter-based OTA and Nauta transconductor. The post layout simulation shows excellent DC gain, GBW, speed, input referred noise characteristics which is suitable for high speed applications. Moreover, the proposed simple bulk-tuning "detecting feedback" loop biasing circuit improves the immunity to PVT variations and hence improves the robustness of the proposed OTA architecture. The proposed OTA has competitive performance compared with state-of-Art OTAs.

Authorized licensed use limited to: Università degli Studi di Brescia. Downloaded on July 25,2024 at 08:59:20 UTC from IEEE Xplore. Restrictions apply.

References

[1] J. Aguado-Ruiz, A. Lopez-Martin, J. Lopez-Lemus and J. Ramirez-Angulo, "Power Efficient Class AB Op-Amps With High and Symmetrical Slew Rate," in IEEE Transactions on Very Large Scale Integration (VLSI) Systems, vol. 22, no. 4, pp. 943-947, April 2014, doi: 10.1109/TVLSI.2013.2256946.

[2] S. Pourashraf, J. Ramirez-Angulo, A. J. Lopez-Martin and R. González-Carvajal, "A Highly Efficient Composite Class-AB–AB Miller Op-Amp With High Gain and Stable From 15 pF Up To Very Large Capacitive Loads," in IEEE Transactions on Very Large Scale Integration (VLSI) Systems, vol. 26, no. 10, pp. 2061-2072, Oct. 2018, doi: 10.1109/TVLSI.2018.2830365.

[3] E. Cabrera-Bernal, S. Pennisi, A. D. Grasso, A. Torralba, and R. G. Carvajal, "0.7-V three-stage class-AB CMOS operational transconductance amplifier," *IEEE Trans. Circuits Syst. I, Reg. Papers*, vol. 63, no. 11, pp. 1807–1815, Nov. 2016.

[4] M. Figueiredo, R. Santos-Tavares, E. Santin, J. Ferreira, G. Evans, and J. Goes, "A two-stage fully differential inverter-based self-biased CMOS amplifier with high efficiency," *IEEE Trans. Circuits Syst. I, Reg. Papers*, vol. 58, no. 7, pp. 1591–1603, Jul. 2011.

[5] G. Giustolisi, A. D. Grasso and S. Pennisi, "High-Drive and Linear CMOS Class-AB Pseudo-Differential Amplifier," in IEEE Transactions on Circuits and Systems II: Express Briefs, vol. 54, no. 2, pp. 112-116, Feb. 2007, doi: 10.1109/TCSII.2006.886239.

[6] S. Song *et al.*, "A low-voltage chopper-stabilized amplifier for fetal ECG monitoring with a 1.41 power efficiency factor," *IEEE Trans. Biomed. Circuits Syst.*, vol. 9, no. 2, pp. 237–247, Apr. 2015.

[7] M. Yavari, N. Maghari, and O. Shoaei, "An accurate analysis of slew rate for two-stage CMOS opamps," *IEEE Trans. on Circuits and Systems II:Express Briefs*, vol. 52, no. 3, pp. 164–167, March 2005.

[8] H. Zhang and G. Shi, "Symbolic behavioral modeling for slew and settling analysis of operational amplifiers," *2011 IEEE 54th International Midwest Symposium on Circuits and Systems (MWSCAS),* Seoul, 2011, pp. 1-4, doi: 10.1109/MWSCAS.2011.6026581.

[9] A. P. Nicholson, A. Iberzanov, J. Jenkins, T. J. Hamilton, and T. Lehmann, "A statistical design approach for a digitally programmable mismatch-tolerant high-speed Nauta structure differential OTA in 65-nm CMOS," IEEE Trans. Very Large Scale Integr. (VLSI) Syst., vol. 24, no. 9, pp. 2899–2910, Sep. 2016.

[10] S. Kumaravel, A. Gupta, and B. Venkataramani, "VLSI implementation of G*m*-C filter using modified Nauta OTA with double CMOS pair," in *Proc. IEEE Recent Adv. Intell. Comput. Syst. (RAICS)*, Sep. 2011, pp. 216–220.

[11] A. N. Irfansyah, L. Pham, A. Nicholson, T. Lehmann, J. Jenkins, and T. Hamilton, "Nauta OTA in a second-order continuous-time delta sigma modulator," in *Proc. IEEE 57th Int. Midwest Symp. Circuits Syst. (MWSCAS)*, Aug. 2014, pp. 849–852.

Authorized licensed use limited to: Università degli Studi di Brescia. Downloaded on July 25,2024 at 08:59:20 UTC from IEEE Xplore. Restrictions apply.