A Statistical Design Approach for a Digitally Programmable Mismatch-Tolerant High-Speed Nauta Structure Differential OTA in 65-nm CMOS

Andrew Peter Nicholson, Artemij Iberzanov, Julian Jenkins, Tara Julia Hamilton, *Member, IEEE*, and Torsten Lehmann, *Senior Member, IEEE*

***Abstract*— The Nauta structure differential operational transconductance amplifier (OTA) is introduced as a solution to an amplifier design in deep submicrometer CMOS. This simple high-speed inverter-based architecture uses a negative conductance dc gain enhancement technique to produce high dc gains and large unity gain frequencies. The design tradeoff is that the achievable dc gain is proportional to transistor device matching. Our analysis shows that fixed width Nauta structure OTAs have low dc gains due to variations, and thus viable Nauta OTAs need to have tuning mechanisms available to correct for mismatch. This paper presents a digitally programmable Nauta structure OTA architecture built using digital-to-transconductance converters (DTCs). These DTCs are designed to allow for flexibility in producing digital tuning solutions to the device mismatch problem using Nauta OTAs. We present a theoretical analysis of the digital Nauta OTA solution space for high dc gains and a statistical framework to estimate the likelihood of achieving certain gain specifications. Experimental results from a 65-nm CMOS prototype shows that the architecture achieves an average dc gain of greater than 60 dB in line with the minimum expected gain of 59 dB, and on-chip unity gain bandwidth is inferred above 5.8 GHz.**

***Index Terms*— Digitally assisted analog design, Nauta structure OTA, submicrometer CMOS analog design.**

I. Introduction

We present a conceptual design for a digitally programmable Nauta structure operational transconductance amplifier (OTA) [1], [2] and experimental results from a chip prototype implemented in 65-nm CMOS. The amplifier design covered here is a fully differential OTA architecture using a negative conductance dc gain enhancement technique. The Nauta structure is an alternative analog design for nanometer CMOS amplifier implementations that, otherwise, suffer from problems, such as limited intrinsic gain, reduced voltage headroom, small linear output range, and large output conductance of short channel devices [3], [4]. Common styles of a traditional analog amplifier architecture used within the literature targeting deep submicrometer CMOS include the telescopic OTA, telescopic OTA with regulated cascodes, folded-cascode OTA, and two stage Miller compensated variants, such as a telescopic stage followed by a common-source stage [5]–[7]. These OTAs are all limited within the deep submicrometer region to low dc gain and small linear output range. The telescopic OTA has a limited linear output range, which can be increased at the expense of large device dimensions and more parasitic capacitances and lower gain-bandwidth product. Single-stage OTAs using regulated cascodes offer higher dc gain at the expense of increased current consumption, and two-stage variants can offer rail-to-rail output swing with more current and area consumption. All of these standard designs are susceptible to device mismatch, which will further reduce their performance.

Our digital Nauta OTA architecture is a response to the challenge of designing analog circuitry further into the deep submicrometer CMOS—an active mismatch cancelation technique that allow OTAs to maintain high dc gain and high bandwidth at the same time as scaling down in area and power consumption. As [8] explores in detail, in 90 nm and smaller processes, simply scaling up the width and the length of MOS transistors to overcome mismatch is no longer a viable approach due to gate leakage effects. By only increasing width, mismatch can be minimized at the expense of power consumption. Annema *et al.* [8] concluded that mismatch cancelation is needed to break the area-power-matching relation.

Besides explicit digitally assisted techniques, more innovation is needed in the design of commercial analog circuits besides the standard practice of using large devices and higher currents in order to reduce mismatch and increase performance. While these techniques have proved to be successful, for the most part, the increase in power consumption and the increased size of the devices required to ensure correct operation make them extremely expensive components on any chip [9]. However, analog circuits cannot be entirely replaced with digital ones, and therefore, with the decrease in minimum feature size, the overhead of the analog

Manuscript received September 7, 2015; revised December 16, 2015; accepted January 20, 2016. Date of publication February 24, 2016; date of current version August 23, 2016. This work was supported by the Australian Research Council under Grant LP100200275.

A. P. Nicholson, A. Iberzanov, and T. Lehmann are with the School of Electrical Engineering and Telecommunications, University of New South Wales, Sydney, NSW 2052, Australia (e-mail: intothemist@gmail.com; z3215001@zmail.unsw.edu.au; t.lehmann@unsw.edu.au).

J. Jenkins is with Perceptia Devices Inc., Sydney, NSW 2064, Australia (e-mail: julian@perceptia.com).

T. J. Hamilton is with The MARCS Institute, University of Western Sydney, Penrith, NSW, 2751, Australia (email: T.Hamilton@westernsydney.edu.au).

Color versions of one or more of the figures in this paper are available online at http://ieeexplore.ieee.org.

Digital Object Identifier 10.1109/TVLSI.2016.2526048

1063-8210 © 2016 IEEE. Personal use is permitted, but republication/redistribution requires IEEE permission.
See http://www.ieee.org/publications_standards/publications/rights/index.html for more information.

Authorized licensed use limited to: Università degli Studi di Brescia. Downloaded on July 25,2024 at 07:36:38 UTC from IEEE Xplore. Restrictions apply.

circuits on any IC increases. Thus, Nauta's architecture is an attractive option as it is a high bandwidth structure due its lack of internal nodes, which can achieve high gains at low V_{DD}, scaling into the deep submicrometer regime—contrasting with the conventional cascoded op-amps, which become increasingly difficult to design in these conditions.

Within the literature, the Nauta architecture has found recent use in low-power, low-pass, and bandpass CMOS RF filter implementations [10]–[13], continuous time delta sigma converters [14], [15], pipeline analog to digital converter (ADCs) [16], and high-frequency continuous time filters [4]. Research work on enhancing the Nauta structure analog performance with digitally assisted techniques includes reconfigurable transconductance cells for use in programmable bandwidth filter architectures in [17] and [18], and digital calibration techniques of positive feedback structures are explored in [19] and [20]. We propose a digital-to-transconductance converter (DTC) whose internal architecture is mismatch tolerant, contains no internal signal carrying nodes, and is programmed by an N-bit code word, setting the value of transconductance [21]. Its mismatch tolerant design means that multiple code words may map to the same value of transconductance, however, it provides a strong likelihood of a continuous range of output transconductance even under conditions of device mismatch. A DTC is implemented as an array of tristate CMOS inverters using a nonbinary-scaled ratio of transistor width, each controlled digitally, allowing for a process of tuning the effective overall width. Each CMOS inverter in the original Nauta transconductor design is replaced by a DTC controlled by on-chip memory. We have a digitally programmable framework to implement the transconductance difference between the appropriate DTCs to enable high dc gains within the OTA.

The mode of programming intended for the presented device architecture is a 1-D solution space, searchable by an automatic tuning circuit that calibrates the transconductance difference to output conductance within the accuracy of the minimum transconductance step available in a DTC. The design presented here is a flexible prototyping platform—it is assumed that for a fixed application, such as an amplifier implementing a multiplying digital-to-analog converter, once minimum design specifications are fixed in terms of unity gain bandwidth and minimum dc gain, the number of design degrees of freedom is reduced.

This paper is organized as follows. Section II is an introduction to the Nauta structure OTA, Section III is the analysis of a fixed sized Nauta structure OTA, Section IV analyzes the DTC used as the programmable unit within the digital Nauta OTA, Section V deals with the architecture and analysis of the digital Nauta structure OTA, Section VI is transistor level simulations of the digital OTA, Section VII is chip results and comparisons to theoretical models, Section VIII is a calibration scheme and a digital tuning circuit, and finally, Section IX is the conclusion and future work.

II. Nauta Transconductor Introduction

This section is based on Nauta's work on a differential transconductor element composed of six

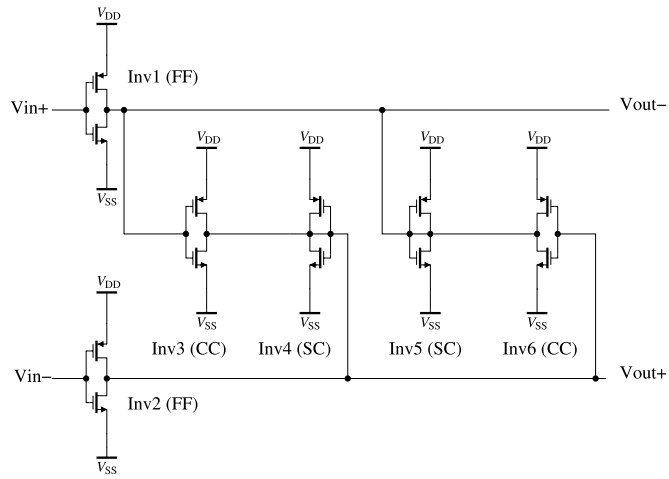

Fig. 1. Nauta OTA architecture showing the six canonical CMOS inverters.

inverters [1]—two feed-forward (FF), two cross-coupled (CC), and two self-coupled (SC) as presented in Fig. 1. The operational model is based on the principle of a dc gain enhancement obtained using a negative resistance load, for each path in the differential signal. Referring to Fig. 1, the negative resistance is formed by the CC (Inv6) and SC (Inv5) inverter pair with reference to the FF inverter (Inv1) and correspondingly by the (Inv3, Inv4) pair to (Inv2) given the correct transistor widths for the negative transconductance to be formed. Considering just one side of the differential path (Inv1, Inv5, Inv6), the ac small signal gain from V_{in+} to V_{out-} is

$$|A_V| = g_{m,\mathrm{FF}} \cdot r_{\mathrm{load}}. \tag{1}$$

In (1), we define the following.

1) $g_{m,\mathrm{FF}}$ is the transconductance of the FF inverter.
2) $r_o = (g_{\mathrm{ds1}} + g_{\mathrm{ds5}} + g_{\mathrm{ds6}})^{-1} = (\sum g_{\mathrm{ds}})^{-1}$ is the output resistance of the three inverters in one side of the differential signal path.
3) $R_n = (g_{m5} - g_{m6})^{-1} = (\Delta g_m)^{-1}$ is the negative load presented by the SC and CC inverters.
4) $r_{\mathrm{load}} = (\sum g_{\mathrm{ds}} + \Delta g_m)^{-1}$.

We can see that if R_n is chosen to be negative and equal to r_o, then (1) predicts an infinite r_{load} and dc gain. We can cause R_n to go negative by choosing the SC inverter's width to be smaller than the CC inverter's width, referring to the simplified long-channel MOSFET model equation $g_m = (W/L)\mu C_{\mathrm{ox}}(V_{\mathrm{gs}} - V_{\mathrm{TH}})$ for a device in saturation, and $g_{\mathrm{ds}} = (W/L)\mu C_{\mathrm{ox}}(V_{\mathrm{gs}} - V_{\mathrm{TH}})^2\lambda$ where the symbols have their usual meaning. The equation for maximum dc gain is given by solving for infinite r_{load}

$$\sum g_{\mathrm{ds}} - \Delta g_m = 0. \tag{2}$$

The dc gain achievable is bound by the device mismatch error in transistor transconductance. The practical upper bound of gain as limited by the precision of device matching can be formulated as follows:

$$A_V = \frac{g_{m,\mathrm{FF}}}{\sum g_{\mathrm{ds}} + \triangle g_m + \delta g_m} \tag{3}$$

Authorized licensed use limited to: Università degli Studi di Brescia. Downloaded on July 25,2024 at 07:36:38 UTC from IEEE Xplore. Restrictions apply.

where δg_m is the overall mismatch in the desired ideal transconductance difference (Δg_m). Common-mode stability needs to be ensured via $g_{m5} + g_{m6} > g_{m1}$ to ensure an overall common-mode gain less than 1.

An analytical solution of (2) for maximum dc gain under ideal matched conditions, given $W_{\mathrm{CC}} > W_{\mathrm{SC}}$, is as follows:

$$\left|(W_{\mathrm{SC}} - W_{\mathrm{CC}})\frac{1}{L}\mu C_{\mathrm{ox}}(V_{\mathrm{gs}} - V_{\mathrm{TH}})\right| = (W_{\mathrm{FF}} + W_{\mathrm{CC}} + W_{\mathrm{SC}})\frac{1}{L}\mu C_{\mathrm{ox}}(V_{\mathrm{gs}} - V_{\mathrm{TH}})^2\lambda$$

$$|W_{\mathrm{SC}} - W_{\mathrm{CC}}| = (W_{\mathrm{FF}} + W_{\mathrm{CC}} + W_{\mathrm{SC}}) \cdot \frac{g_{\mathrm{ds,unit}}}{g_{m,\mathrm{unit}}}$$

$$\therefore W_{\mathrm{CC}} = (\zeta + \xi) \cdot W_{\mathrm{SC}} + \xi \cdot W_{\mathrm{FF}} \tag{4}$$

where $\zeta^{-1} = 1 - g_{\mathrm{ds,unit}}/g_{m,\mathrm{unit}}$ and $\xi = \zeta \cdot g_{\mathrm{ds,unit}}/g_{m,\mathrm{unit}}$. $W_{\mathrm{SC}}, W_{\mathrm{CC}}$, and W_{FF} are, respectively, the total width of the SC, CC, and FF nMOS transistor. We define $g_{\mathrm{ds,unit}}$ as the output conductance and $g_{m,\mathrm{unit}}$ as the transconductance of the smallest width, minimum length inverter in the 65-nm CMOS process. To determine pMOS widths, we simply use the ratio of pMOS/nMOS used for the smallest balanced inverter. For our purposes, the ratio is 2, as will be discussed in Section IV.

As emphasized in [19], the achievable yield of high gain OTAs using this technique is dependent upon the method of achieving the minimization of mismatch in transconductance across process and temperature variations. The yield is a dual condition on the minimum acceptable dc gain and an overall positive net load resistance, that is, the sign of (2) is positive, to ensure dc phase stability and minimize hysteresis. The positive feedback architecture of the OTA means that hysteresis is an issue—the hysteresis width is proportional to the amount of unbalanced positive feedback due to CC inverters.

III. Analysis of a Fixed Width Nauta Structure OTA

This section analyzes achievable parametric yields using simple fixed width Nauta structure OTAs by simulating the impacts of device mismatch to highlight the need for a digitally programmable solution. With reference to Fig. 1, our OTA under an analysis consists of FF inverters (Inv1, Inv2) sized with nMOS 54.3 μm using five fingers of 10.86 μm and pMOS using ten fingers of 10.86 μm. CC inverters have ten pMOS fingers and five nMOS fingers. SC inverters have 20 pMOS fingers and 10 nMOS fingers. All transistors are chosen at the minimum device length of 65 nm. AC simulations were conducted at a fixed low frequency varying the SC inverters (Inv4, Inv5) finger width by 5-nm increments to evaluate the dc gain at a fixed CC finger width. Using a parametric evaluation across CC (Inv3, Inv6) finger widths again stepping 5-nm increments, we can plot a 2-D surface of optimal width pairs (Inv5, Inv6 and Inv3, Inv4) for maximum dc gain under ideal matched conditions. Fig. 2 shows the parametric line of (4) under fixed FF inverter width, W_{FF} equal to 54.3 μm. From this data, we can determine the line of best fit for maximum gain is given as

$$W_{\mathrm{CC}} = 1.3 \cdot W_{\mathrm{SC}} + 7.156\ \mu\mathrm{m}. \tag{5}$$

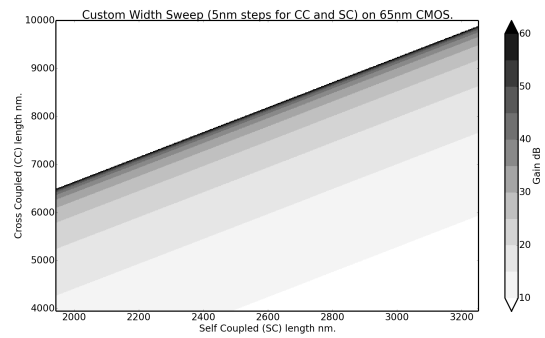

Fig. 2. DC gain surface across CC and SC nMOS finger width. W_{FF} equal to 54.3 μm.

TABLE I

Fixed Width Nauta Structure OTA Statistics for Matched Simulations and 1024 Monte Carlo Mismatch Trials. SC and CC Widths Given Are the Finger Width in μm. W_{FF} Equal to 54.3 μm

W_{SC}	W_{CC}	A_V dB	$\overline{f_T}, \overline{f_3}$ GHz	$\overline{A_V}, \sigma(A_V)$ dB	Yield %
1.310	4.86	74.1	5.1, 0.10	35.5, 6.0	98.8
1.695	5.86	66.2	5.0, 0.12	34.3, 5.9	98.1
2.085	6.86	77.7	4.8, 0.12	33.6, 5.8	98.8
2.470	7.86	80.2	4.7, 0.13	32.8, 5.7	98.7
2.855	8.86	75.0	4.6, 0.13	32.2, 5.8	98.8
3.240	9.86	76.4	4.5, 0.14	31.6, 5.7	99.6
3.625	10.86	78.4	4.4, 0.14	31.2, 5.7	99.8

This implies an approximation of $(g_{\mathrm{ds,unit}}/g_{m,\mathrm{unit}}) = 0.1$. Analyzing the data behind Fig. 2, we can calculate the number of high gain solutions, e.g., $\geq$75 dB, as a fraction of the total solution space, and we can determine the average distance, (ΔW_{SC} and ΔW_{CC}) (nm), in transistor width between these high gain solutions. The data reveal that across differently sized variants of a fixed-width Nauta OTA, high gain solutions $\geq$75 dB are 31% of the solution space, and that the average distance in transistor width between solutions is $\Delta W_{\mathrm{SC}} = 56$ nm and $\Delta W_{\mathrm{CC}} = 74$ nm.

Running 1024 Monte Carlo mismatch trials at selected fixed width configurations to simulate the effect of process variation on performance shows a large reduction in average dc gain from the predictions under matched conditions, and a decrease in yield via the possibility of having an overall negative net load resistance. Table I shows a summary of performance data at a selection of optimal width pairs derived from (5). It shows the simulated dc gain under matched conditions simulated via an open-loop configuration loaded with 1 pF on each differential output. The table then summarizes statistics produced via the Monte Carlo trials: mean unity gain frequency and mean bandwidth, and mean and standard deviation of dc gain and yield, as determined solely by low-frequency phase response. There is an inverse relationship between yield and average gain, because the more the condition of maximum gain is approximately true the more chance of an overall negative net load resistance. Average achievable gain decreases slightly as finger width W_{SC} and W_{CC} increases due to decreased output resistance across SC and CC inverters for a fixed W_{FF} size.

Authorized licensed use limited to: Università degli Studi di Brescia. Downloaded on July 25,2024 at 07:36:38 UTC from IEEE Xplore. Restrictions apply.

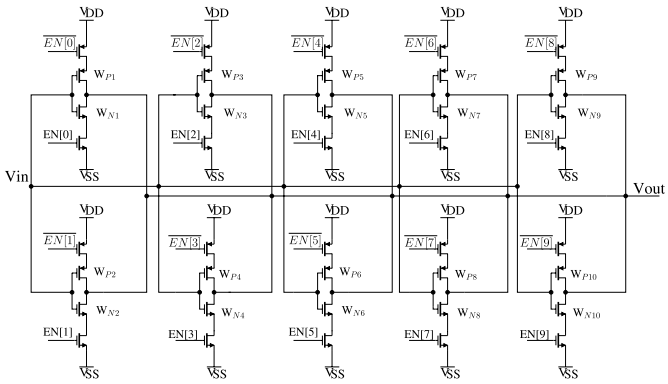

Fig. 3. 10-bit DTC—ten tristate CMOS inverters connected in parallel.

From this summary, we conclude that designing a fixed width Nauta structure OTA will produce low yields for high gain requirements and will require some form of digital tuning to overcome device mismatch.

IV. Digital-to-Transconductance Converter

The 10-bit DTC architecture is shown in Fig. 3 and is presented in more depth in [21]. The architecture for an N-bit converter is composed of N nonlinearly width-scaled, minimum length, CMOS tristate inverters connected in parallel and assumed to be biased at the ideal common-mode voltage. For the 65-nm CMOS process, the smallest inverter available is pMOS/nMOS width 240/120 nm. The width scaling ratio between every successive inverter is chosen to maximize the range of transconductance available while minimizing the possibilities of effective tuning loss under mismatch. Our design goal of continuous transconductance output from the converter is to allow sufficient control to achieve the operating conditions that are required for setting high gain within a Nauta structure OTA under conditions of transistor mismatch, temperature variation, and output common-mode errors. Our N-bit DTC's digital control settings are, herein, referred to as the code word.

Our constraints are to design a structure that provides a complete coverage over the entire range of transconductance output within the tuning accuracy of the converter, i.e., the minimum-sized transistor's transconductance value. This requires observing the differences in the steps of output transconductance at each adjacent code-word transition to determine if there is a complete range of achievable transconductance output within the converter's accuracy. Less important is the measure of converter integral nonlinearity over the code-word range—this is due to the converter's role embedded into a larger programmable Nauta structure OTA.

Four CMOS transistors and two control lines are used for each bit of converter accuracy. The crucial design variable is the chosen widths for each individual inverter, in particular, the ratio of widths in each successive transistor comprising the N tristate inverters. A classical binary weighted structure is obtained using an exact ratio of 2 between the widths in successive code words.

The design tradeoff, when choosing the transistor width scaling ratio required to achieve our design goal, is between maximizing the achievable output range of transconductance versus the possibility of introducing a positive differential nonlinearity (DNL) under mismatch conditions. Using Monte Carlo mismatch trials, we can simulate the sizing of different transistor ratios to ascertain the achievable output transconductance range and an acceptable level of confidence that our structure does not contain positive DNL under mismatch conditions.

We define the DNL of the converter for a given code word, j, as $\mathrm{DNL}_j = (g_{m,j+1} - g_{m,j}/g_{m,\mathrm{lsb}}) - 1$, where $g_{m,j}$ is the transconductance at a given code word j and $g_{m,\mathrm{lsb}}$ is the minimum transconductance step. Positive DNL implies that between two adjacent code words, we skip an interval of achievable output transconductance, since we are increasing greater than the minimum transconductance step. Negative DNL implies that the transition between code words reduces in transconductance, possibly overlapping with the previous code words.

As shown in [21], we settle on a transistor width a scaling ratio of 1.8 as an acceptable tradeoff in yield and output range after examining DTC DNL statistics produced from Monte Carlo trials across a range of scaling ratios. Referencing Fig. 3 for the definitions of W_{Nx} and W_{Px}, we have

$$\begin{aligned} W_{N1} : W_{P1} &= 120\ \mathrm{nm} : 240\ \mathrm{nm} \\ W_{Ni} : W_{Pi} &= 1.8 \cdot W_{N(i-1)} : 1.8 \cdot W_{P(i-1)} \\ &\text{for } 1 < i \leq 10. \end{aligned}$$

The Monte Carlo trials predict that the DTC minimum unit of transconductance is $g_{m,\mathrm{unit}} = 70\ \mu\mathrm{S}$ with standard deviation $\sigma(g_{m,\mathrm{unit}}) = 10\ \mu\mathrm{S}$, simulating 200 mV around the ideal common-mode voltage. Output conductance is simulated at $g_{\mathrm{ds,unit}} = 7\ \mu\mathrm{S}$ and $\sigma(g_{\mathrm{ds,unit}}) = 2\ \mu\mathrm{S}$. We, therefore, claim an approximate ratio of $(g_{\mathrm{ds,unit}}/g_{m,\mathrm{unit}}) = 0.1$ from DTC transconductance and output conductance curves, which corresponds to the value found in the simulation of a range of fixed width Nauta structure OTAs.

V. Digitally Programmable Differential Nauta Structure OTA Analysis

A. Theory

Fig. 4 shows the schematic of the proposed architecture. It is a digitally programmable differential Nauta structure OTA, using digital buses to be able to independently control the width of any of the six canonical inverters within the structure. The dual 60-bit buses (active high, active low) are shown, which drive tristating of the ten inverters per DTC. The architecture is derived from that shown in Fig. 1, which transforms each canonical inverter involved within the Nauta structure OTA into a DTC. Each canonical inverter thus becomes a bank of ten width-scaled tristate inverters digitally tunable in terms of transconductance and output conductance. Our digital OTA uses six 10-bit DTCs to form the complete differential architecture. The total digital word size for our architecture of a single stage differential OTA is 60 bits.

We estimate the effect of the discrete size of switchable elements on the dc gain of our differential OTA using the transconductor theory presented in Section II. We estimate the

Authorized licensed use limited to: Università degli Studi di Brescia. Downloaded on July 25,2024 at 07:36:38 UTC from IEEE Xplore. Restrictions apply.

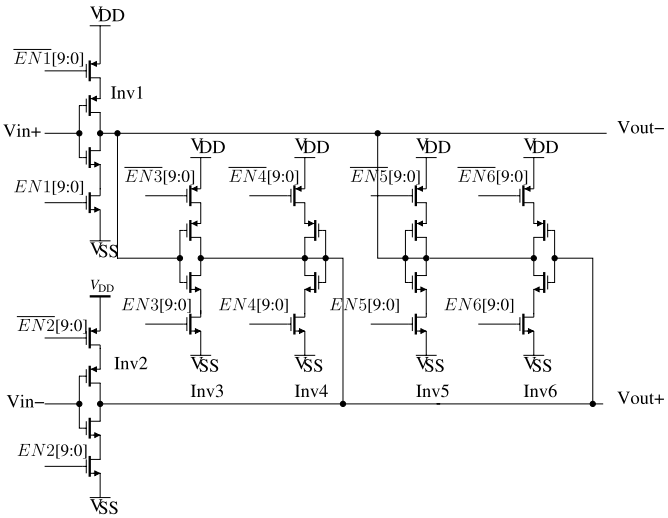

Fig. 4. Nauta structure differential OTA using six 10-bit DTCs.

minimum gain that we should expect in an average case—it is the probabilistic expectation of the gain only assuming the ability to program a solution—that is, there exists a programming pair representing the CC and SC enabled width that satisfies (2) within the resolution of the smallest inverter. We assume that (2) is satisfied by the programming of the six DTCs and that the device mismatch error is totally modeled by δg_m. The digital tuning process means that we have a smallest increment in inverter width, which is an estimate of the error δg_m. In particular, we can write according to (3)

$$\begin{aligned} A_V^{\text{trim}} &> \frac{\sum_{i=1}^{N} E_i \cdot g_{m,i}}{\delta g_m} \\ &> \frac{\sum_{i=1}^{N} E_i \cdot g_{m,i}}{\frac{1}{2} \cdot g_{m,\text{unit}}} \end{aligned} \tag{6}$$

where $E_i = \{0, 1\}$ for $1 \leq i \leq N$ indicates whether that particular indexed inverter in the FF DTC is enabled or not and takes the value one or zero accordingly. N is the number of bits in the DTC. We define $g_{m,i}$ as the transconductance of the ith smallest width, minimum length inverter in the 65-nm CMOS process, where $i = 1$ is the smallest inverter and $i = N$ is the largest inverter.

We switch now from a notation measured in the total width of the respective transistors' width (W_{SC}, W_{CC}, and W_{FF}) to one measured in the total equivalent smallest width inverters (M_{SC}, M_{CC}, and M_{FF}). M_{FF} is the number of FF inverters turned ON, M_{CC} is the number of CC inverters turned ON, and similarly, M_{SC} is the number of SC inverters as measured in the equivalent number of smallest width inverters. M_{avail} is the total number of such inverters available to turn sc on—in our scheme, M_{avail} is 452 per DTC (rounded to the nearest integer). To determine the programming code word from the values of M_{SC}, M_{CC}, and M_{FF}, we need to convert from a number representing equivalent smallest width inverters to the encoding used within the DTC, taking into account the width scaling ratio of 1.8.

Using our digital control scheme, we can turn ON a certain number of each of the FF, CC, and SC inverters, adding to an equivalent M_T smallest width, minimum length inverters, to try to satisfy (2).

Output conductance is given as

$$\sum g_{\text{ds}} = M_T \cdot g_{\text{ds,unit}} = (M_{\text{FF}} + M_{\text{CC}} + M_{\text{SC}}) \cdot g_{\text{ds,unit}}. \tag{7}$$

To make our negative conductance condition, we program a difference in CC and SC transistors, $M_\Delta = M_{\text{SC}} - M_{\text{CC}}$, which we define as

$$(M_{\text{SC}} - M_{\text{CC}}) \cdot g_{m,\text{unit}} = M_\Delta \cdot g_{m,\text{unit}}. \tag{8}$$

Combining (7) and (8), we have the condition of maximum gain for a digital Nauta OTA as follows:

$$\begin{aligned} |M_\Delta \cdot g_{m,\text{unit}}| &= M_T \cdot g_{\text{ds,unit}} \\ |(M_{\text{SC}} - M_{\text{CC}}) \cdot g_{m,\text{unit}}| &= (M_{\text{FF}} + M_{\text{CC}} + M_{\text{SC}}) \cdot g_{\text{ds,unit}}. \end{aligned}$$

Solving for the number of SC transistors to enable for maximum dc gain, where $M_{\text{CC}} > M_{\text{SC}}$, gives

$$M_{\text{SC}} = (\zeta - \xi) \cdot M_{\text{CC}} - \xi \cdot M_{\text{FF}} \tag{9}$$

where $\zeta^{-1} = 1 + (g_{\text{ds,unit}}/g_{m,\text{unit}})$ and $\xi = \zeta \cdot (g_{\text{ds,unit}}/g_{m,\text{unit}})$.

Using an approximation of $g_{\text{ds,unit}}/g_{m,\text{unit}}$, we can find values for ζ and ξ, which then allows us to find maximum dc gain solutions to (9). First, we can rewrite the expected minimum gain from (6) as

$$\begin{aligned} A_V^{\text{trim}} &> \frac{M_{\text{FF}} \cdot g_{m,\text{unit}}}{\frac{1}{2} \cdot g_{m,\text{unit}}} \\ &> 2 \cdot M_{\text{FF}}. \end{aligned} \tag{10}$$

We note that this equation for expected minimum gain implies that for a given dc gain specification, we can estimate the minimum area required. The gain specification sets the ratio of smallest to largest transconductance elements. Thus, for increasing dc gain, the required area scales up linearly. Power consumption and unity gain bandwidth also scale linearly with increasing area—this is different from the traditional analog design tradeoff. As related in [22] and [23], there are fundamental physical limits that set a bandwidth-power-accuracy tradeoff, and that the matching of minimum size nMOS devices is becoming worse with decreasing feature size. Digital programmability allows a postfabrication active cancelation scheme to alleviate device mismatch.

Second, we can estimate the unity gain frequency of the OTA using

$$f_T = \frac{M_{\text{FF}} \cdot g_{m,\text{unit}}}{2\pi \cdot C_{\text{total}}}. \tag{11}$$

We find the total load capacitance, C_{total}, using an analysis of the two states (enabled or disabled) of the tristate CMOS inverters in either one of the three roles as FF, CC, or SC. It can be shown that this total load capacitance is modeled as follows:

$$\begin{aligned} C_{\text{total}} = {} & 12 \cdot C_{\text{gd}} \cdot M_{\text{avail}} + 6 \cdot C_{\text{db}} \cdot M_{\text{avail}} \\ & + 3 \cdot C_{\text{gs}} \cdot (M_{\text{CC}} + M_{\text{SC}}) \end{aligned} \tag{12}$$

where capacitances $C_{\text{gd}}, C_{\text{db}}$, and C_{gs} have their usual meaning.

Authorized licensed use limited to: Università degli Studi di Brescia. Downloaded on July 25,2024 at 07:36:38 UTC from IEEE Xplore. Restrictions apply.

Finally, we combine (11) and (12) to show the limits of intrinsic unity gain bandwidth. We make a simplifying assumption about the settings of FF inverters, and with $\varrho = (M_{\mathrm{CC}} + M_{\mathrm{SC}})/M_{\mathrm{avail}}$

$$f_T = \frac{g_{m,\mathrm{unit}}}{2\pi} \cdot (12 \cdot C_{\mathrm{gd}} + 6 \cdot C_{\mathrm{db}} + 3 \cdot C_{\mathrm{gs}} \cdot \varrho). \quad (13)$$

Following Nauta [1], [2], we give a description of output referred noise based on thermal noise of the transconductors. Output noise is given as

$$\bar{i}_{\mathrm{od}}^2 = 4 \cdot k \cdot T \cdot c \cdot \sum g_m \cdot \triangle f \quad (14)$$

where $1 < c < 2$ is a thermal noise coefficient, $\triangle f$ is the signal bandwidth, and $\sum g_m$ is the total transconductance of all inverters.

The expected output common range for the digital Nauta OTA, simplifying by ignoring the tristate transistors, can be found from an analysis of the ensuring saturation of both nMOS and pMOS transistors. With a definition of the common-mode gain as $A_{\mathrm{cm}} = M_{\mathrm{FF}}/(M_{\mathrm{CC}} + M_{\mathrm{SC}})$, we have the following derivation to find the input common-mode range (ICMR):

$$\begin{aligned} V_{\mathrm{TN}} &< V_{O,\mathrm{cm}} < V_{\mathrm{DD}} - |V_{\mathrm{TP}}| \\ V_{\mathrm{TN}} &< V_{I,\mathrm{cm}} \cdot A_{\mathrm{cm}} < V_{\mathrm{DD}} - |V_{\mathrm{TP}}| \\ V_{\mathrm{TN}} \cdot A_{\mathrm{cm}}^{-1} &< V_{I,\mathrm{cm}} < (V_{\mathrm{DD}} - |V_{\mathrm{TP}}|) \cdot A_{\mathrm{cm}}^{-1}. \end{aligned}$$

The ICMR is, therefore, ICMR $= (V_{\mathrm{DD}} - |V_{\mathrm{TP}}| - V_{\mathrm{TN}}) \cdot A_{\mathrm{cm}}^{-1}$, where V_{TN} and V_{TP} are the threshold voltages for nMOS and pMOS, respectively, V_{DD} is the supply voltage, and $V_{I,\mathrm{cm}}$ and $V_{O,\mathrm{cm}}$ are the input and output common-mode voltages, respectively. Under the assumptions of $V_{\mathrm{TN}} = 575$ mV and $V_{\mathrm{TP}} = -550$ mV, we have an estimated ICMR of 150–75 mV for common-mode gain values ranging from 1/2 to 1.

Power supply rejection ratio (PSRR) for this structure is poor and necessitates a well-regulated power supply on-chip. As for all inverter-based structures, the bias currents are strongly dependent on the power supply and thus the PSRR suffers.

The common-mode rejection ratio (CMRR) for the amplifier is

$$\begin{aligned} \mathrm{CMRR} &= \frac{A_v}{A_{\mathrm{cm}}} = 2 \cdot M_{\mathrm{FF}} \cdot (M_{\mathrm{CC}} + M_{\mathrm{SC}}) \cdot M_{\mathrm{FF}}^{-1} \\ &= 2 \cdot (M_{\mathrm{CC}} + M_{\mathrm{SC}}). \end{aligned} \quad (15)$$

The digital Nauta OTA's CMRR is expected to range from 50 dB and above using the values for M_{SC} and M_{CC} given in Table II, and the condition of an optimally programmed OTA.

B. Predictions

Table II shows the maximum gain solution pairs (columns 1 and 3) as derived using values for M_{CC} that are the closest equivalents to W_{CC} found in Table I. We produce solutions consisting of M_{SC}, M_{CC}, and M_{FF} at the maximum gain point using (9) and a ratio of $(g_{\mathrm{ds,unit}}/g_{m,\mathrm{unit}}) = 0.1$. Using (10), the prediction of the minimum gain is 59 dB across all solution pairs, as it is independent of the settings for SC and CC inverters. The value chosen for M_{FF} is a constant equal to $M_{\mathrm{avail}} = 452$, and the largest value available as this will maximize the expected gain.

TABLE II

MODEL AND SIMULATION SOLUTIONS FOR M_{SC} AND M_{CC} VALUE USED FOR BOTH MODEL AND SIMULATION, MODEL PREDICTED UNITY GAIN FREQUENCY AND SIMULATED DC GAIN AND UNITY GAIN FREQUENCY. MODEL A_v dB IS 59 dB AND $M_{\mathrm{FF}} = 452$

M_{SC}	M_{SC} (sim.)	M_{CC}	f_T GHz	A_v dB	f_T GHz (sim.)
124	119	202	7.3	59	7.2
159	151	244	7.0	69	7.1
193	182	285	6.8	79	7.1
227	222	327	6.6	81	6.9
262	257	369	6.4	66	6.8
295	291	410	6.2	59	6.8
330	325	452	6.1	83	6.7

Our estimates for the smallest-width nMOS transistor capacitances on our 65-nm CMOS process are $C_{\mathrm{gd}} = 100$ aF, $C_{\mathrm{db}} = 20$ aF, and $C_{\mathrm{gs}} = 100$ aF, assuming $C_{\mathrm{ox}} = 19$ fF/μm^2, $C_j = 1.2$ fF/μm, and $C_{\mathrm{jsw}} = 0.04$ fF/μm. With unit transconductance simulated at $g_{m,\mathrm{unit}} = 70$ μS, and the number of equivalent smallest width CC and SC inverters turned ON for a given setting, we can use (12) to derive the unity gain frequency predicted from (11) (column 4 in Table II). Using (13), we find the minimum $f_T = 5.9$ GHz using $\varrho = 2$ and the maximum $f_T = 8.6$ GHz using $\varrho = 0$.

We can also confirm if we have satisfied the common-mode stability condition by noting that the value of CC and SC inverters turned ON is always larger than the FF inverters turned ON. That is, $M_{\mathrm{CC}} + M_{\mathrm{SC}} > M_{\mathrm{FF}}$. This condition is not met for the first two rows of Table II, and thus in practice, using these codes may not be feasible or we may need output common-mode feedback adjustment.

VI. SIMULATION RESULTS OF THE DIGITAL NAUTA STRUCTURE OTA

AC simulations via parametric sweeps of the parameter M_{SC} were carried out centered around each ideal solution pair found in Section V to find the simulated optimal M_{SC} for a given constant parameter M_{CC}. The optimal model predicted and simulated values for M_{SC} (columns 1 and 2), as well as the dc gain and unity gain frequency (columns 5 and 6), were noted for each optimal solution pair found in simulation, as shown in Table II. The OTA was loaded with only 100 fF capacitance on each differential output in open-loop configuration. It should be noted that the simulations are done without device mismatch effects included—as such, these figures should be considered the best case estimates for a given solution pair.

The data show that the analytical model we have developed in Section V and the simulation predictions of achievable dc gain are in good agreement with each other. The minimum gain found across all simulated solutions pairs is 59 dB as predicted in Section V, and the highest gain solution

Authorized licensed use limited to: Università degli Studi di Brescia. Downloaded on July 25,2024 at 07:36:38 UTC from IEEE Xplore. Restrictions apply.

TABLE III
MONTE CARLO ANALYSIS RESULTS OVER 512 TRIALS SHOWING MEAN AND STANDARD DEVIATIONS FOR DC GAIN, UNITY GAIN FREQUENCY, AND APPARENT YIELD ESTIMATES FOR TWO NOMINAL DC GAINS SPECIFICATIONS

M_{SC}	M_{CC}	$\overline{A_v}, \sigma(A_v)$ dB	$\overline{f_T}, \sigma(f_T)$ GHz	>50, >75 dB %
182	285	35, 7	7.1, 0.03	2.4, 0.0
222	327	35, 6	7.0, 0.03	1.4, 0.0
257	369	34, 7	6.9, 0.03	1.6, 0.0
291	410	34, 6	6.8, 0.03	1.4, 0.0
325	452	34, 7	6.8, 0.03	2.2, 0.2

pairs found under simulation are all on average within less than 6 M_{SC} units of that predicted by the analytical model. Average simulated dc gain across the seven solution pairs is 71 dB. Unity gain frequency is simulated higher for most solution pairs than our theoretical analysis predicts, but with good agreement.

The Monte Carlo analysis was conducted to estimate the effect of statistical variations due to device mismatch upon the digitally programmable Nauta structure OTA. The analysis entailed 512 trials of an ac mode simulation across a small sampling of solution pairs as already presented in Table II. The results are shown in Table III. The average gain of any one particular solution pair is lower than the expected minimum gain at a ideal solution pair of 59 dB, as we saw in Section V, reflecting the fact that due to process variation, the best solution pair will change across different chips, and the Monte Carlo trials are conducted at a fixed solution pair, where each trial is, in effect, a simulation of this code on a different chip.

As finding the optimal solutions on each chip across all viable code words through Monte Carlo analysis is computationally intensive, our key assumption in the following analysis is that the statistics of how frequently a certain dc gain is obtained at a single sampled solution pair across all chips (Monte Carlo trials) estimate the matching resolution from which we can give a lower bound of the matching resolution across all solution pairs on a single chip. That is, the matching statistics obtained from using one solution pair sampled across different chips should be a lower bound on the matching statistics obtained from using multiple solution pairs within one chip. This assumption is strengthened by Fig. 5, showing similar curves from the probability distribution function (pdf) of simulated Monte Carlo trials using the five solutions listed in Table III and measured experimental data obtained from a prototype digital OTA. Thus, we conclude that the code-gain surface statistics within one chip and across chips are similar.

From the Monte Carlo results for apparent yield at certain solution codes, shown in the last column of Table III, estimated from the frequency of a dual condition achieving a certain dc gain and an positive net load resistance, we can find the probability of obtaining the given condition at least once using the digital programmability of the OTA. Due to the digital programmability of the Nauta OTA, we are able to conduct a binomial experiment, as each possible solution pair is a

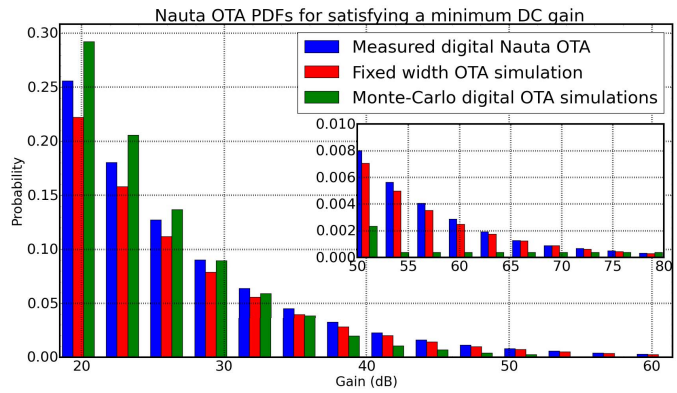

Fig. 5. Simulated and measured pdf's for the likelihood of the OTA having equal to, or greater than, a certain dc gain relative to the entire code space.

independent event, whose success is independent of each other, and the outcome is a success or failure (a high dc gain condition or not). We use the apparent yield figures as the probability of success of the event and the number of possible solution pairs on-chip as the number of independent events. We can use the formula for the probability of a certain number of successful events of a binomial random variable to estimate the likelihood of achieving a certain dc gain at least once per chip. The probability density function and the cumulative probability formula of a binomial experiment follow, showing the cumulative probability formula for one or more successful events:

$$P(x) = nCx \cdot p^x \cdot q^{n-x}$$
$$P(x \geq 1) = 1 - P(x = 0) \Rightarrow P(x \geq 1) = 1 - q^n \quad (16)$$

where n is the number of independent events, p is the probability of success, q is the probability of failure, x is the number of successful events, and nCx is the binomial coefficient. Note $p = 1 - q$.

We note that of the 2^{2N} ($N = 10$ bits) number of possible programming pairs (SC and CC codes), in practice, we have a substantially smaller solution space available. Two factors contribute to this reduction, one, our solution space, is in fact a parametric line, as shown in (9), and the other, the common-mode stability condition $M_{\mathrm{CC}} + M_{\mathrm{SC}} > M_{\mathrm{FF}}$ must be met.

First, from (9), we can determine the predicted solution space size by considering the maximum solution pair, when $M_{\mathrm{CC,max}} = M_{\mathrm{avail}}$. This implies

$$M_{\mathrm{SC,max}} = (\zeta - \xi) \cdot M_{\mathrm{avail}} - \xi \cdot M_{\mathrm{FF}}. \quad (17)$$

Second, the minimum solution pair is determined as follows:

$$\begin{aligned} M_{\mathrm{CC}} + M_{\mathrm{SC}} &> M_{\mathrm{FF}} \\ M_{\mathrm{CC}} + (\zeta - \xi) \cdot M_{\mathrm{CC}} - \kappa \cdot M_{\mathrm{FF}} &> M_{\mathrm{FF}} \\ (1 + \zeta - \xi) \cdot M_{\mathrm{CC}} &> (1 + \xi) \cdot M_{\mathrm{FF}} \\ M_{\mathrm{CC,min}} &> \frac{1 + \xi}{1 + \zeta - \xi} \cdot M_{\mathrm{FF}} \\ M_{\mathrm{SC,min}} &= (\zeta - \xi) \cdot M_{\mathrm{CC,min}} - \xi \cdot M_{\mathrm{FF}} \\ M_{\mathrm{SC,min}} &= \left((\zeta - \xi) \cdot \frac{1 + \xi}{1 + \zeta - \xi} - \xi \right) \cdot M_{\mathrm{FF}}. \end{aligned} \quad (18)$$

Authorized licensed use limited to: Università degli Studi di Brescia. Downloaded on July 25,2024 at 07:36:38 UTC from IEEE Xplore. Restrictions apply.

Finally, taking the distance between these two points gives our size estimate for the predicted solution space

$$n = \sqrt{(M_{\mathrm{CC,max}} - M_{\mathrm{CC,min}})^2 + (M_{\mathrm{SC,max}} - M_{\mathrm{SC,min}})^2}. \tag{19}$$

As has been the case throughout, we have maximum FF $M_{\mathrm{FF}} = M_{\mathrm{avail}}$, so combined with $M_{\mathrm{avail}} = 452$ and $(g_{\mathrm{ds,unit}}/g_{m,\mathrm{unit}}) = 0.1$ using (17) and (18), we find that the maximum and minimum solution pairs are $M_{\mathrm{CC,max}} = 452$, $M_{\mathrm{SC,max}} = 329$ and $M_{\mathrm{CC,min}} = 271$, $M_{\mathrm{SC,min}} = 181$, then using (19), we have $n = 234$.

Note that this estimate of the size of the solution space is determined by the line length as solved in the units of equivalent transistor width and assumes that there exists only one code pair per width solution available. Our DTC architecture has redundant encodings of digital code to transconductance, so we may have more than one code that maps to a given solution; however, we estimate the minimum number of possible solutions to not overestimate the likelihood.

The apparent yield figures of solutions will be lower than we can expect, since as we have pointed out that the code pair used during the Monte Carlo trials is most likely not the best code pair we could have used for any particular chip. We calculate that the apparent yield figures under estimate the likelihood of achieving a given dc gain by up to a factor of 16 given the ratio of average dc gain achieved under mismatch to the expected minimum gain of an ideal solution pair derived earlier, that is, 35–59 dB. This corresponds to assuming our actual highest gain code pair is located within the lower 4 bits of our DTC code range or equivalently within a range of 12 M_{SC} units.

Using (16), $n = 234$ as the number of independent events, and 16 $\times$ average apparent yield of greater than 50 dB gain solutions as the event success probability, $p = (16 \times 0.018) = 0.29$ and $q = 0.71$, the probability of obtaining at least one solution pair with greater than 50 dB gain is 100%. With 16$\times$ the average apparent yield number for greater than 75 dB gain solutions, $p = (16 \times 0.0004) = 0.0064$ and $q = 0.9936$ return a probability of obtaining at least one solution pair with greater than 75 dB of 78%.

In summary, we have shown that the programmable Nauta OTA is capable of high dc gain solutions in ideal matched situations along a parametric line of programming solution pairs of SC and CC DTCs, and using mismatch simulations via Monte Carlo statistical trials, we can estimate the likelihood of achieving certain nominal dc gains in at least one solution pair.

VII. Chip Prototype Test Results

Fig. 6 shows the micrograph of the prototype OTA in 65-nm CMOS. The dimensions of the OTA are 80 μm $\times$ 30 μm, with the digital registers block being 40 μm $\times$ 30 μm, giving a total area of 3600 μm^2.

A. DC Gain Characteristics

The prototype Nauta structure OTA was tested under the same conditions as that of the simulations described in Section VI. The OTA was configured in an open loop configuration with differential input and output signals driven by a source-measurement unit. A laboratory dc power supply is connected to the prototype board at $V_{\mathrm{dd}} = 1.2$ V. To determine the dc gain, two separate measurements were done. First, transconductance values were calculated by keeping the differential output at zero differential volts, while sweeping the differential input from -100 to 100 mV, centered on the common mode, and measuring output current. Second, output conductance values were calculated by keeping the differential input at zero volts, sweeping the differential output from -100 to 100 mV and measuring output current. These values are combined to estimate dc gain using (1). We use each of the seven solution pairs in Table II as starting points, and while M_{CC} and M_{FF} are held constant, we use incremental values of M_{SC} to program the digital OTA, and then measure g_m and r_{out} curves from which we can determine the dc gain. The M_{SC} sweep was done for 40 codes on either side of the (M_{SC} and M_{CC}) starting point, for a total of 80 sample points per (M_{SC} and M_{CC}) starting point. The average over multiple experimental sweeps is taken to find the best SC code and highest dc gain at that code. Table IV presents the experimental results, giving the code pairs with the highest average dc gain in the vicinity of these center points. The average distance between the corresponding predicted analytical solutions (shown in Table II) and the laboratory measured solutions is 7 M_{SC} units, and for simulated solutions is 6 M_{SC} units. The average dc gain across all solutions pairs is 62 dB, which is in keeping with our expected minimum of 59 dB. We found a mean $g_m = 14$ mS across multiple measurements,

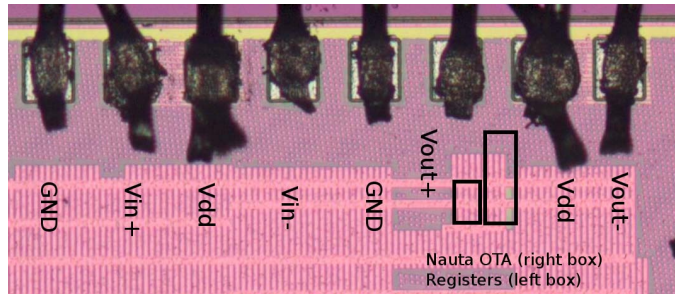

Fig. 6. Micrograph of 65-nm CMOS prototype chip containing the Nauta structure OTA.

TABLE IV
Measured Results From Prototype Chip OTA Showing Optimal Solution Pairs, Difference Between Measurement, Model and Simulated Solutions, and Measured DC Gain

M_{SC}	M_{CC}	$\triangle M_{SC}$ (model)	$\triangle M_{SC}$(sim.)	A_v dB
112	202	12	7	51
151	244	8	0	61
193	285	0	11	64
216	327	11	6	63
253	369	9	4	65
293	410	2	2	65
335	452	5	10	65

Authorized licensed use limited to: Università degli Studi di Brescia. Downloaded on July 25,2024 at 07:36:38 UTC from IEEE Xplore. Restrictions apply.

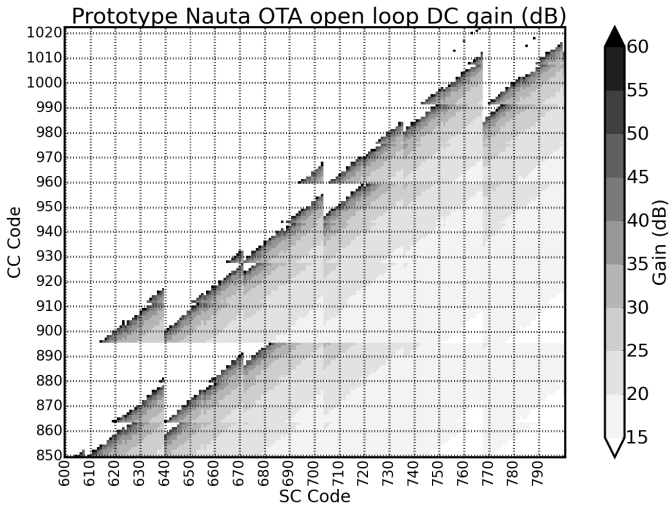

Fig. 7. Measured dc gains from prototype digital Nauta OTA. The nonbinary weighted scaling ratio inside DTCs is clearly visible.

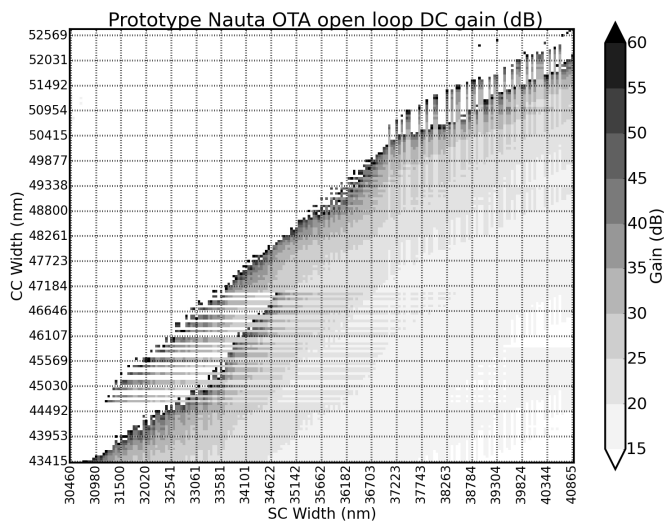

Fig. 8. Measured dc gains after sorting codes to absolute designed widths, with transistor mismatch visible as uncorrected sorting errors.

which implies a mean $r_{\text{out}} = 90$ kΩ for our average dc gain.

A second methodology for characterizing the digital Nauta OTA is presented through Figs. 7–9. They show the results of scanning for all codes in the region bounded from M_{CC} and $M_{\text{SC}} = (452, 335)$ to M_{CC} and $M_{\text{SC}} = (361, 254)$ to produce a surface map of the achievable dc gain. Output conductance measurements were taken during the sweep, and the dc gain was estimated from these measurements and an average transconductance value. First, Fig. 7 shows the raw data with both axes units given as the SC and CC programming code. Fig. 7 shows the nonlinear scaling of transistor width inside each DTC, as explained in Section V. Second, converting from code to absolute transistor width as designed and sorting the data by total width is shown in Fig. 8. Fig. 8 is now mostly continuous but now reveals the effect of transistor mismatch inside the DTCs on chip. This mismatch means that there are noncontiguous parts of the curve when

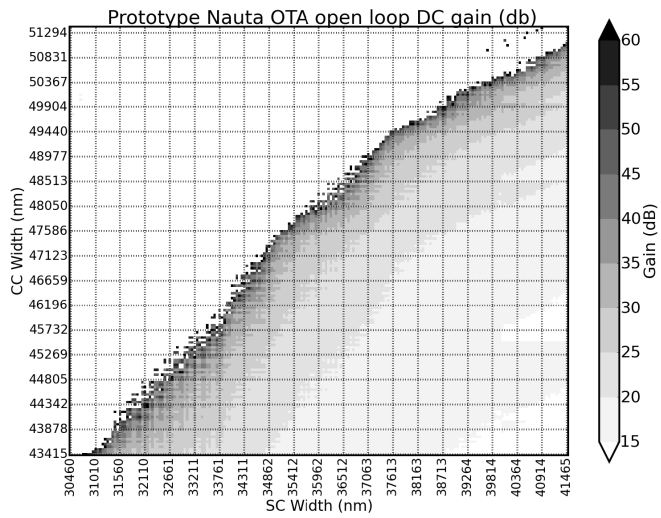

Fig. 9. Measured dc gains after sorting codes to width and correcting for mismatch.

only using as-designed transistor widths to convert from code to absolute width. Finally, manually adjusting some widths assigned to bit positions inside the DTC to produce a smooth curve is shown in Fig. 9. This adjustment was to decrease bit 7's width by 3 μm (20%) or 25 M_{SC} units for the CC DTCs and increase bit 8's width by 2 μm (7%) or 17 M_{SC} units for SC DTCs.

Fig. 9 clearly shows the parametric line as derived in (4) in Section II and shown (for fixed-width designs) in Fig. 2. The surface data contain an average dc gain along the line of maximum gain of 61 dB with standard deviation of 11 dB. Of the 173 solution pairs sampled, 157 (approximately 91%) were found with dc gains over 50 dB, and 18 of the 173 solution pairs (approximately 10%) were found with dc gains over 75 dB. The bend in the line of Fig. 9 reflects the effect of small series resistance between FF inverters and the SC inverters. This resistance decreases the transconductance difference (between SC and CC) required for maximum gain, and this bends the curve lower.

We have seen that the prototype digital OTA performs as predicted by the theoretical analysis and it can achieve the minimum expected theoretical gain of 59 dB for a randomly sampled solution pair. The mean dc gain found was greater than 60 dB across both testing methodologies thus confirming the Monte Carlo derived estimate of the probability of achieving greater than 50 dB at least once being effectively guaranteed (100%). The Monte Carlo derived estimate of the probability of achieving greater than 75 dB at least once being 78% is exceeded by the data confirming up to 10% of the solution space containing dc gains achieving 75 dB.

B. Frequency Response Characteristics

The prototype OTA was tested using a closed loop resistive feedback circuit, and set at a dc gain of 4.55 (13.16 dB) to characterize the OTA's frequency response. On-chip unity gain bandwidth is difficult to measure at gigahertz speeds and needs to be inferred from measurements that include

Authorized licensed use limited to: Università degli Studi di Brescia. Downloaded on July 25,2024 at 07:36:38 UTC from IEEE Xplore. Restrictions apply.

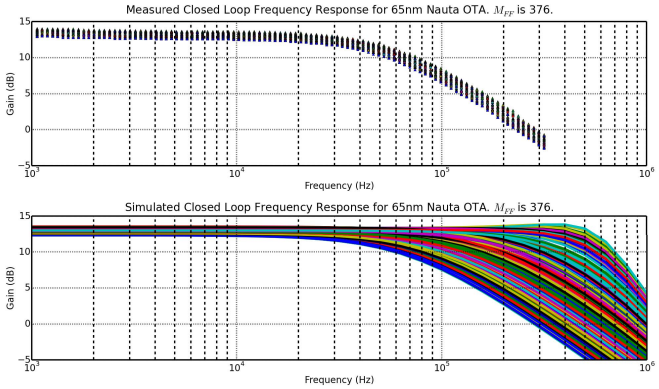

Fig. 10. Closed loop frequency response curves for the Nauta OTA prototype.

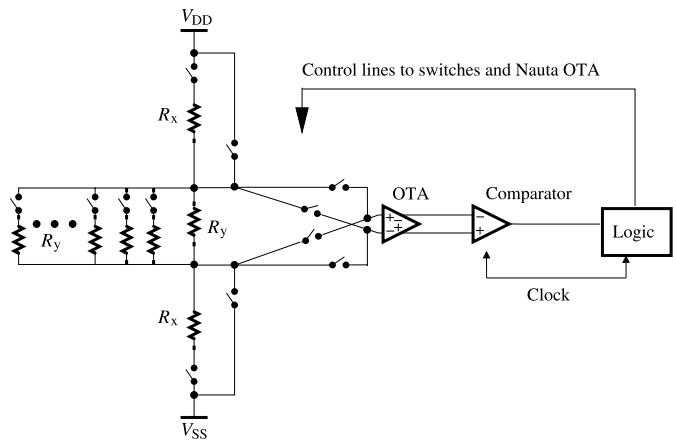

Fig. 11. Calibration schematic based on the detection of hysteresis.

TABLE V
COMPARISON OF PUBLISHED CMOS OTAS WITH THIS PAPER. * NEXT TO FoM VALUE INDICATES A SIMULATION-ONLY RESULT

Work	Tech.	A_v dB	f_T MHz	P mW	FoM MHz/mW
This paper	65nm	60	5800	28	207
[24]	65nm	64	2.1	0.15	14*
[7]	65nm	54	7.8	1.75μW	4457*
[25]	65nm	76	2000	13.6	147*
[26]	90nm	59	650	580μW	1120*
[12]	130nm	50	5400	2	2700*
[27]	130nm	60	1.88 kHz	18nW	104
[19]	180nm	64	186	117μW	1590
[28]	180nm	62	10	75μW	133

large capacitances of printed circuit board (PCB) tracks and measurement equipment. Presented in Fig. 10 are the measurements of the prototype OTA in closed loop, and the simulations of the closed loop test circuit using the same values as the components on the test circuit—$R_s = 200$ kΩ, $R_f = 910$ kΩ, $C_{\text{probe}} = 12$ pF, and $C_{\text{board}} = 145$ pF. The extra capacitances added to the differential output (C_{probe}), and input (C_{board}) are derived from the average PCB capacitance measurements and probe specifications.

The OTA was programmed with FF and cross-couple codes to ensure a large open loop gain, experimentally found at $M_{\text{FF}} = 376$ and $M_{\text{CC}} = 249$. This setting corresponds to a minimum predicted open loop on-chip unity gain bandwidth of 5.8 GHz [refer to (13)]. Iterating over 313 SC codes, a frequency sweep was conducted from 1 to 300 kHz using a differential 150 mV peak to peak sine wave input. Filtering the output frequency responses for only dc gains between 12.29 and 14.03 dB, which allows for 5% error in resistance values, we experimentally find a mean closed loop unity gain bandwidth of 272 kHz and standard deviation of 20 kHz from 29 accurate programming codes. Simulating the test circuit using ranges of CC and SC codes that correspond to an equivalent total width as the experimentally located accurate codes, and filtering for the same dc gain range as done above, we find a mean closed loop unity gain bandwidth of 652 kHz and standard deviation of 295 kHz. Our experimental value for closed loop unity gain bandwidth lies within the simulated distribution at 1.3 standard deviations away from the mean simulated value, and as such we infer that the on-chip open loop unity gain bandwidth is close to the predicted value of 5.8 GHz.

VIII. OTA CALIBRATION STRATEGY

In this section, we detail a digital OTA calibration strategy based on the detection of the existence, and size, of hysteresis and input offset [20]. The circuit schematic given in Fig. 11 shows one method of automatically calibrating the digital OTA, that is, finding a programming code with high gain, corrected input offset, and reduced hysteresis. The circuit generates the required test voltages using a programmable resistor ladder and a switch matrix. The circuit can generate differential voltages from either power rail, or from the programmable resistor divider network using the elements of a unit resistance (R_y) connected in parallel. The values of R_x and R_y are chosen to generate the small voltages required to detect the size of hysteresis and input offset anticipated. This scheme requires minimal hardware overhead and does not require precision matched components.

The switch matrix is used to apply the differential voltage on the inputs of the OTA in either polarity, or to generate a zero differential input voltage at mid-supply by shorting out the R_y resistors. The digital output of the comparator is sampled by the digital logic as the differential test voltages are swept in a bidirectional pattern, such as ($V_{\text{DD}} - V_{\text{SS}}, V_{R_y}, -V_{R_y}, V_{\text{SS}} - V_{\text{DD}}, -V_{R_y}, V_{R_y}$, and $V_{\text{DD}} - V_{\text{SS}}$) so as to detect how large either the input offset or hysteresis is for the current programming code of the digital OTA. V_{R_y} can be progressively made smaller or larger as the algorithm progresses. The digital OTA is initially configured with a symmetrical programming code on both differential paths—this initial code is derived from analytical solutions and simulation data. The calibration procedure analyzes the width of input offset and hysteresis and proceeds to step through code space until it no longer detects hysteresis. This procedure assumes that the highest gain solutions are located close to the onset of hysteresis due to the positive feedback architecture—increasing the positive feedback increases the gain until an overall negative net load resistance is reached,

Authorized licensed use limited to: Università degli Studi di Brescia. Downloaded on July 25,2024 at 07:36:38 UTC from IEEE Xplore. Restrictions apply.

which is unstable.

Depending upon the results of a test voltage sweep, the programming codes are adjusted, asymmetrically if necessary, to center any input offset, and find the high gain point by locating hysteresis and then decreasing the cross-coupling strength. The algorithm described in [20] details how the programming code is to be adjusted in response to the presence of hysteresis and input offset. It is expected that the digital OTA and calibration scheme can equally deal well with random versus linear gradient mismatch. Each on-chip digital OTA using the calibration scheme will search for the appropriate programming codes to set a high gain setting.

IX. Conclusion

Table V shows our Nauta structure differential OTA compared with other published CMOS OTAs in terms of dc gain A_v, unity gain bandwidth f_T, power consumption P, and a figure of merit (FoM). The FoM is calculated as $\text{FoM} = f_T/P$, scaled by unity gain bandwidth in megahertz and power consumption in milliwatt. We are a power intensive, very high-speed solution, with the added advantage of digital programmability over the traditional analog designs. Using our FoM for comparison, we are the second highest performing of the measured OTAs, with a significantly higher f_T and large power overhead due to the flexible prototyping design of this OTA. Our OTA can scale in power and unity gain bandwidth across programming codes and maintain high dc gains.

Our recommended design flow for digital Nauta OTA architects in deep submicrometer CMOS is an iterative process, starting from the application specifications of dc gain and unity gain bandwidth through DTC design and finally the statistical characterisation of the digital OTA. First, we design the internal architecture of the DTCs—a given dc gain sets the ratio of smallest to largest transconductance inside a DTC, then selecting the scaling ratio between every successive transconductor will set the number bits necessary for programmability. As discussed, the DTC scaling ratio is a tradeoff between effective yield of continuous transconductance tuning and transconductance range. Second, unity gain bandwidth has an intrinsic minimum set by unit transconductance and capacitances, which can be controlled by designing for an acceptable value of unit transconductance, and minimizing parasitic capacitances via layout techniques. Finally, if the size of the code space prohibits a complete simulation, then the statistical characterization of the digital Nauta OTA itself can be done via Monte Carlo sampling at various code-space points to establish probabilistic values for apparent yield. These values can be used to estimate the yield across the entire solution set.

The Nauta structure OTA architecture implemented in deep submicrometer CMOS requires some form of tuning to overcome device mismatch within the OTA and to achieve high dc gain. A mismatch-aware architecture for a DTC was used to build the digitally programmable Nauta structure differential OTA. The OTA is capable of high-speed, high dc gains using certain programming codes for the SC and CC DTCs. Mismatch simulations via Monte Carlo statistical trials can estimate the likelihood of achieving certain nominal dc gains. Using this statistical approach, we can design programmable Nauta structure OTAs and make probabilistic statements that at least one solution pair exists that is capable of achieving a given dc gain specification.

Measurements of the prototype digital Nauta structure OTA in 65-nm CMOS confirms our theoretical analysis through the relationships seen in the closed loop frequency responses, the dc gain surface map in code space, and the demonstration that the digital OTA can achieve an average dc gain greater than 60 dB across all solution pairs, with a smaller range of solutions demonstrating dc gain greater than 75 dB. On-going research includes work on architectural strategies to increase the digital resolution of width tuning available, while minimizing power consumption.

References

[1] B. Nauta, *Analog CMOS Filters for Very High Frequencies* (The Springer International Series in Engineering and Computer Science). Boston, MA, USA: Kluwer, 1993.

[2] B. Nauta, "A CMOS transconductance-C filter technique for very high frequencies," *IEEE J. Solid-State Circuits*, vol. 27, no. 2, pp. 142–153, Feb. 1992.

[3] W. Sansen, "Analog design challenges in nanometer CMOS technologies," in *Proc. IEEE Asian Solid-State Circuits Conf. (ASSCC)*, Nov. 2007, pp. 5–9.

[4] S. Pavan and Y. Tsividis, *High Frequency Continuous Time Filters in Digital CMOS Processes*. Norwell, MA, USA: Kluwer, 2000.

[5] T. Nieminen and K. Halonen, "Operational amplifier design for high-speed pipelined analog-to-digital converters in deep-submicron CMOS processes," in *Proc. 7th Conf. Ph.D. Res. Microelectron. Electron. (PRIME)*, Jul. 2011, pp. 69–72.

[6] T. Nieminen and K. Halonen, "Single and two-stage OTAs for high-speed CMOS pipelined ADCs," in *Proc. 20th Eur. Conf. Circuit Theory Design (ECCTD)*, Aug. 2011, pp. 877–880.

[7] A. F. Yeknami, F. Qazi, J. J. Dabrowski, and A. Alvandpour, "Design of OTAs for ultra-low-power sigma-delta ADCs in medical applications," in *Proc. Int. Conf. Signals Electron. Syst. (ICSES)*, Sep. 2010, pp. 229–232.

[8] A.-J. Annema, B. Nauta, R. van Langevelde, and H. Tuinhout, "Analog circuits in ultra-deep-submicron CMOS," *IEEE J. Solid-State Circuits*, vol. 40, no. 1, pp. 132–143, Jan. 2005.

[9] D. Gangopadhyay, E. G. Allstot, A. M. R. Dixon, K. Natarajan, S. Gupta, and D. J. Allstot, "Compressed sensing analog front-end for bio-sensor applications," *IEEE J. Solid-State Circuits*, vol. 49, no. 2, pp. 426–438, Feb. 2014.

[10] R. J. E. Jansen, J. Haanstra, and D. Sillars, "Complementary constant-g_m biasing of Nauta-transconductors in low-power g_m-C filters to $\pm 2\%$ accuracy over temperature," *IEEE J. Solid-State Circuits*, vol. 48, no. 7, pp. 1585–1594, Jul. 2013.

[11] P. Andreani and S. Mattisson, "On the use of Nauta's transconductor in low-frequency CMOS g_m-C bandpass filters," *IEEE J. Solid-State Circuits*, vol. 37, no. 2, pp. 114–124, Feb. 2002.

[12] B. Pankiewicz and M. Madej, "Design of high frequency OTA in 130 nm CMOS technology with single 1.2 V power supply," in *Proc. 2nd Int. Conf. Inf. Technol. (ICIT)*, Jun. 2010, pp. 209–212.

[13] S. Kumaravel, A. Gupta, and B. Venkataramani, "VLSI implementation of G_m-C filter using modified Nauta OTA with double CMOS pair," in *Proc. IEEE Recent Adv. Intell. Comput. Syst. (RAICS)*, Sep. 2011, pp. 216–220.

[14] A. N. Irfansyah, L. Pham, A. Nicholson, T. Lehmann, J. Jenkins, and T. Hamilton, "Nauta OTA in a second-order continuous-time delta-sigma modulator," in *Proc. IEEE 57th Int. Midwest Symp. Circuits Syst. (MWSCAS)*, Aug. 2014, pp. 849–852.

[15] A. N. Irfansyah, A. Nicholson, J. Jenkins, T. J. Hamilton, and T. Lehmann, "Subthreshold operation of Nauta's operational transconductance amplifier," in *Proc. IEEE 13th Int. New Circuits Syst. Conf. (NEWCAS)*, Jun. 2015, pp. 1–4.

[16] A. Nicholson *et al.*, "A 0.3 mm^2 10-b 100 MS/s pipelined ADC using Nauta structure op-amps in 180 nm CMOS," in *Proc. IEEE Int. Symp. Circuits Syst. (ISCAS)*, May 2013, pp. 1833–1836.

Authorized licensed use limited to: Università degli Studi di Brescia. Downloaded on July 25,2024 at 07:36:38 UTC from IEEE Xplore. Restrictions apply.

[17] J. Becker and Y. Manoli, "A continuous-time field programmable analog array (FPAA) consisting of digitally reconfigurable G_m-cells," in *Proc. Int. Symp. Circuits Syst. (ISCAS)*, vol. 1. May 2004, pp. I-1092–I-1095.

[18] P. Crombez, J. Craninckx, and M. Steyaert, "A 100 kHz–20 MHz reconfigurable Nauta g_m-C biquad low-pass filter in 0.13 μm CMOS," in *Proc. IEEE Asian Solid-State Circuits Conf. (ASSCC)*, Nov. 2007, pp. 444–447.

[19] K. Ragab, R. Gharpurey, and M. Orshansky, "Embracing local variability to enable a robust high-gain positive-feedback amplifier: Design methodology and implementation," in *Proc. 13th Int. Symp. Quality Electron. Design (ISQED)*, Mar. 2012, pp. 143–150.

[20] A. Iberzanov, A. Nicholson, J. Jenkins, T. Lehmann, and T. J. Hamilton, "Calibration of the Nauta structure differential OTA," in *Proc. IEEE Asia Pacific Conf. Circuits Syst. (APCCAS)*, Nov. 2014, pp. 189–192.

[21] A. Nicholson, J. Jenkins, A. van Schaik, T. J. Hamilton, and T. Lehmann, "A digital to transconductance converter for Nauta structure op-amps in 65 nm CMOS," in *Proc. IEEE 57th Int. Midwest Symp. Circuits Syst. (MWSCAS)*, Aug. 2014, pp. 173–176.

[22] P. R. Kinget, "Device mismatch and tradeoffs in the design of analog circuits," *IEEE J. Solid-State Circuits*, vol. 40, no. 6, pp. 1212–1224, Jun. 2005.

[23] E. A. Vittoz, "Future of analog in the VLSI environment," in *Proc. IEEE Int. Symp. Circuits Syst.*, vol. 2. May 1990, pp. 1372–1375.

[24] M. J. Cabebe, C. D. Gallego, J. R. Hizon, and L. Alarcon, "Design tradeoffs in a 0.5 V 65 nm CMOS folded cascode OTA," in *Proc. IEEE TENCON Spring Conf.*, Apr. 2013, pp. 293–297.

[25] S. A. Aamir, P. Harikumar, and J. J. Wikner, "Frequency compensation of high-speed, low-voltage CMOS multistage amplifiers," in *Proc. IEEE Int. Symp. Circuits Syst. (ISCAS)*, May 2013, pp. 381–384.

[26] M. Akbari, "Single-stage fully recycling folded cascode OTA for switched-capacitor circuits," *Electron. Lett.*, vol. 51, no. 13, pp. 977–979, 2015.

[27] L. H. C. Ferreira and S. R. Sonkusale, "A 60-dB gain OTA operating at 0.25-V power supply in 130-nm digital CMOS process," *IEEE Trans. Circuits Syst. I, Reg. Papers*, vol. 61, no. 6, pp. 1609–1617, Jun. 2014.

[28] S. Chatterjee, Y. Tsividis, and P. Kinget, "0.5-V analog circuit techniques and their application in OTA and filter design," *IEEE J. Solid-State Circuits*, vol. 40, no. 12, pp. 2373–2387, Dec. 2005.

Andrew Peter Nicholson received the B.Eng. (Hons.) degree in computer engineering from the University of Newcastle, Callaghan, NSW, Australia, and the M.Eng. degree in electrical engineering with a specialization in wireless from the University of Sydney, Sydney, NSW, Australia. He is currently pursuing the Ph.D. degree with the School of Electrical Engineering and Telecommunications, University of New South Wales, Sydney, researching alternative analog design strategies in nanometer CMOS.

Artemij Iberzanov received the B.Eng. degree in electrical engineering from the School of Electrical Engineering and Telecommunications, University of New South Wales, Sydney, NSW, Australia, where he is currently pursuing the M.Eng. degree with the School of Electrical Engineering and Telecommunications.

Julian Jenkins received the B.Sc. degree in computer science and the B.Eng. degree in electrical engineering from the University of New South Wales, Sydney, NSW, Australia, in 1996 and 1997, respectively, where he is currently pursuing the Ph.D. degree.

He was with Quality Semiconductor Australia, Sydney, from 1997 to 2000, where he was involved in 100-Mb/s Ethernet. In 2000, he joined Hiband Semiconductor, San Jose, CA, USA, later acquired by Cypress Semiconductor, San Jose, to focus on 3.5-Gb/s serializer/deserializer (SerDes). In 2005, he co-founded Perceptia Devices, Inc., Sydney, with a focus on SerDes and phase-locked loops (PLLs) in the 10–28 Gb/s range. His current research interests include designing analog circuits in sub 65-nm technologies with a focus on SerDes, PLLs, digitally controlled oscillators, clock and data recovery, and filters.

Tara Julia Hamilton (S'97–M'00) received the B.E. (Hons.) degree in electrical engineering and the B.Com. degree from the University of Sydney, Sydney, NSW, Australia, in 2001, the M.Sc.Eng. degree in biomedical engineering from the University of New South Wales, Sydney, in 2003, and the Ph.D. degree from the University of Sydney, in 2008.

She is currently a Senior Research Lecturer of Biomedical Engineering and Neuroscience with The MARCS Institute, University of Western Sydney, Parramatta, NSW, Australia. Her current research interests include neuromorphic engineering, mixed-signal integrated circuit design, and biomedical engineering.

Torsten Lehmann (M'94–SM'06) received the M.Sc. and Ph.D. degrees in electrical engineering from the Technical University of Denmark, Kgs. Lyngby, Denmark, in 1991 and 1995, respectively, researching the self-learning VLSI neural networks.

He spent two years as a Research Fellow at the University of Edinburgh, Edinburgh, U.K., where he was involved in biologically inspired artificial neural systems. From 1997 to 2000, he was an Assistant Professor of Electronics at the Technical University of Denmark, where he was involved in low-power, low-noise, low-voltage, analog and mixed analog-digital integrated circuits. From 2001 to 2003, he was a Principal Engineer with Cochlear Ltd., Sydney, NSW, Australia, where he was involved in the design of the world's first fully implantable cochlear implant. He is currently an Associate Professor of Microelectronics with the University of New South Wales, Sydney. He has authored over 100 journal papers, conference papers, book chapters, and patents in integrated-circuit design for a range of applications. His current research interests include solid-state circuits and systems, such as analog and digital, biomedical microelectronics, ultralow temperature electronics, nanometer CMOS, and green electronics.

Authorized licensed use limited to: Università degli Studi di Brescia. Downloaded on July 25,2024 at 07:36:38 UTC from IEEE Xplore. Restrictions apply.