An EMI-Resistant Common-Mode Cancelation Differential Input Stage in UMC 180 nm CMOS

Anna Richelli, Simon Kennedy, and Jean-Michel Redouté

***Abstract*—This letter presents an on-chip common-mode cancelation circuit (CMCC), which increases the immunity to electromagnetic interference (EMI) of the input stage in a classic CMOS operational amplifier. Two test chips, containing a classic Miller amplifier and a Miller amplifier with CMCC, respectively, have been fabricated in the UMC 180 nm CMOS process. Measurements illustrate how the latter amplifier exhibits an increased immunity to EMI compared with the former.**

***Index Terms*—Analog circuits, CMOS integrated circuits, electromagnetic compatibility and interference.**

I. Introduction

Operational amplifiers are very sensitive to electromagnetic interference (EMI), which is injected in their inputs [1], [2]. Recently, a theoretical common-mode cancelation input stage has been proposed as a technique to reduce the EMI susceptibility of CMOS amplifiers [3], [4]. This letter presents the measurement results of the practical implementation of this theoretical concept using the UMC 180 nm CMOS process.

II. Common-Mode Cancelation Circuit

Fig. 1 shows the proposed common-mode cancelation circuit (CMCC) input stage [5] implemented in a classic Miller operational amplifier topology [3]. By selecting appropriate resistor values, this circuit allows the ideal small-signal cancelation of common-mode signals while increasing the small-signal differential gain. Let $A'_{\rm dm}$ and $A'_{\rm cm}$ be the respective differential and common-mode gains of a classic Miller opamp. The differential gain ($A_{\rm dm}$) of the modified amplifier using the CMCC is expressed as follows:

$$A_{\rm dm}(s) = A'_{\rm dm}(s).K_{\rm dm} \tag{1}$$

$$A_{\rm cm}(s) = A'_{\rm cm}(s).K_{\rm cm} \tag{2}$$

$$K_{\rm dm} = \frac{R_2 + 1/g_{\rm ds}}{R_1 + R_2 + 1/g_{\rm ds}} + R_2.(g_{m\,P} + g_{m\,N}) \tag{3}$$

$$K_{\rm cm} = \frac{R_2 + 1/g_{\rm ds}}{R_1 + R_2 + 1/g_{\rm ds}} - R_2.(g_{m\,P} + g_{m\,N}). \tag{4}$$

Manuscript received March 8, 2017; revised April 11, 2017; accepted April 18, 2017. Date of publication April 27, 2017; date of current version August 17, 2017. *(Corresponding author: Anna Richelli.)*

A. Richelli is with the Department of Electronic Automation, University of Brescia, Brescia 25123, Italy (e-mail: anna.richelli@ing.unibs.it).

S. Kennedy and J.-M. Redouté are with the Department of Electrical and Computer Systems Engineering, Monash University, Clayton, Vic. 3800, Australia (e-mail: simon.kennedy@monash.edu; jean-michel.redoute@monash.edu).

Color versions of one or more of the figures in this paper are available online at http://ieeexplore.ieee.org.

Digital Object Identifier 10.1109/TEMC.2017.2696166

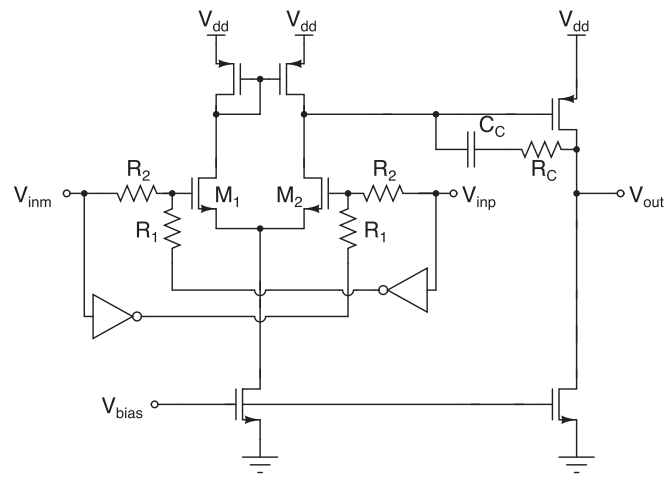

Fig. 1. Schematic of the proposed Miller amplifier with common-mode cancelation.

III. Reducing the EMI Induced Offset in a Miller Opamp Using the Proposed Common-Mode Cancelation Topology

When EMI is injected in the input pins of the Miller opamp, this circuit exhibits a susceptibility to EMI. The latter can be quantified by observing the output voltage offset when the amplifier is connected in a voltage follower configuration. The resulting EMI injection represents a worst case scenario, as for EMI frequencies lying above the unity gain frequency, the resulting common-mode and differential-mode components at the input will be maximal, and generate the largest EMI induced offset ($V_{\rm OS}$) in the input differential pair. This input-referred offset voltage is equal to [2]

$$V_{\rm OS} = \frac{\int_{-\infty}^{\infty} \left| H_{\rm cm}(j\omega).V_{\rm cm}(j\omega).V_{\rm dm}(j\omega) \right| .\cos\phi.d\omega}{V_{\rm gs1,2} - V_t} \tag{5}$$

where ϕ is the phase between the common-mode and differential-mode EMI components

$$\phi = \text{atan}\left(\frac{\text{Im}\{H_{\rm cm}(j\omega).V_{\rm cm}(j\omega).V_{\rm dm}(j\omega)\}}{\text{Re}\{H_{\rm cm}(j\omega).V_{\rm cm}(j\omega).V_{\rm dm}(j\omega)\}} \right) \tag{6}$$

and $H_{cm}\,(j\omega)$ is the transfer function for common-mode signals:

$$H_{\rm cm}(j\omega) = \frac{V_{\rm gs1,2}(j\omega)}{V_{\rm cm}(j\omega)} \tag{7}$$

where $V_{\rm gs1,2}$ is the gate–source voltage of transistors M_1 and M_2,

0018-9375 © 2017 IEEE. Personal use is permitted, but republication/redistribution requires IEEE permission.
See http://www.ieee.org/publications_standards/publications/rights/index.html for more information.

Authorized licensed use limited to: Università degli Studi di Brescia. Downloaded on April 03,2025 at 20:26:57 UTC from IEEE Xplore. Restrictions apply.

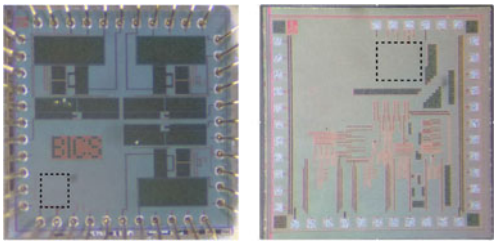

Fig. 2. Microphotographs of the two test chips.

TABLE I
MAIN AC CHARACTERISTICS

	Diff. gain	GBW	CMRR	Power
Original Miller amplifier	95 dB	4 MHz	100 dB	2 mW
Proposed Miller amplifier	100 dB	8 MHz	140 dB	5.6 mW

and V_{cm} is the common-mode EMI signal component applied at both gates. Following expression (5), one way to reduce the EMI induced offset is to decrease H_{cm}. The idea behind this approach is that the CMCC will attenuate small common-mode signals. Consequently, the resulting EMI induced dc offset is minimized since H_{cm} is decreased [3], [4]. At higher EMI frequencies, the CMCC introduces a pole, which is caused by R2, and the parasitic output capacitance of the inverters combined with the input gate–source capacitances of M1 and M2. This pole lies at frequencies exceeding the unity gain frequency, and is not detrimental to the frequency response of the amplifier.

IV. Measurement Results

A classic Miller amplifier and the Miller amplifier using the proposed CMCC have been designed, layouted and fabricated on two separate test chips in the UMC 180 nm CMOS process: A microphotograph is shown in Fig. 2. The main ac parameters of both amplifiers have been experimentally validated, and are listed in Table I. To investigate the CMCC effectiveness, the classic Miller amplifier and the proposed Miller structure with the CMCC input stage are compared when EMI signals of different amplitudes and frequencies are injected into their respective noninverting input terminals, while the opamps are connected as voltage buffers. For the measurement setup, a 33120 A HP RF function generator has been used with a 50 Ω matching load to generate the EMI; the power supply and the biasing voltages were supplied by a E3630A HP power supply. In Figs. 3–5, the EMI induced offset is plotted against the EMI frequency for three EMI amplitude levels. As highlighted by the plots, the Miller amplifier with CMCC exhibits an improved immunity to EMI-induced offset, especially for moderate signal interference, while larger EMI signals are attenuated less drastically. This is due to the fact that the EMI induced offset reduction from the CMCC stems from the attenuation of the common-mode signals around the trip point of the inverters. The range of the attenuation can be made wider by current starving the inverters using diode-connected transistors, as proposed in the circuit depicted in [4].

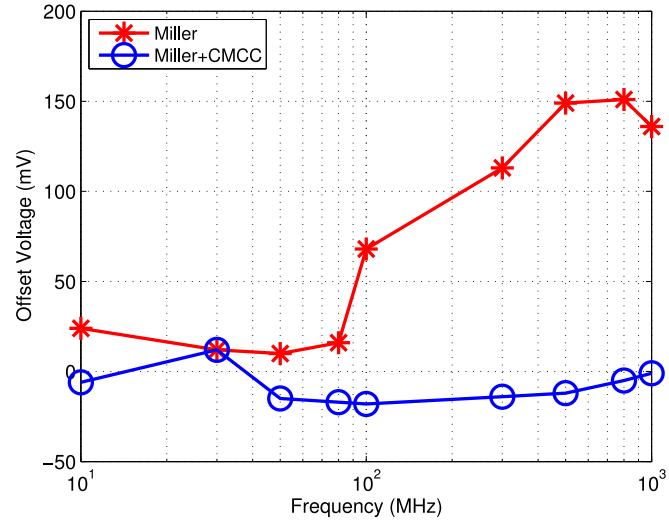

Fig. 3. Measured EMI induced offset @ 0.6 Vpp EMI: Comparison between the Miller amplifier and the modified Miller amplifier with CMCC.

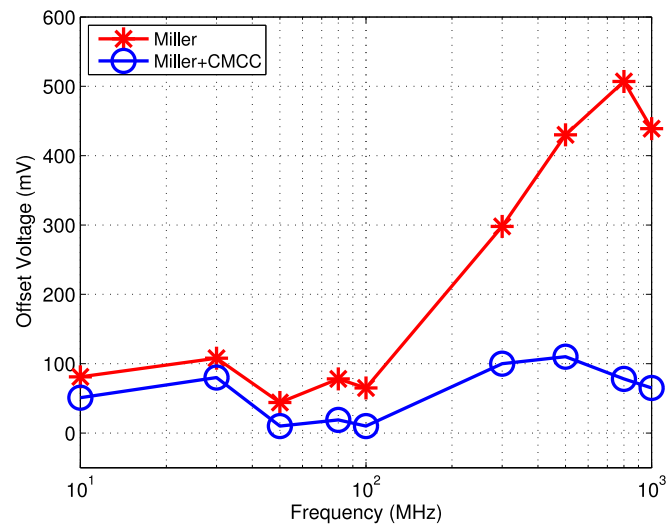

Fig. 4. Measured EMI induced offset @ 1 Vpp EMI: Comparison between the Miller amplifier and the modified Miller amplifier with CMCC.

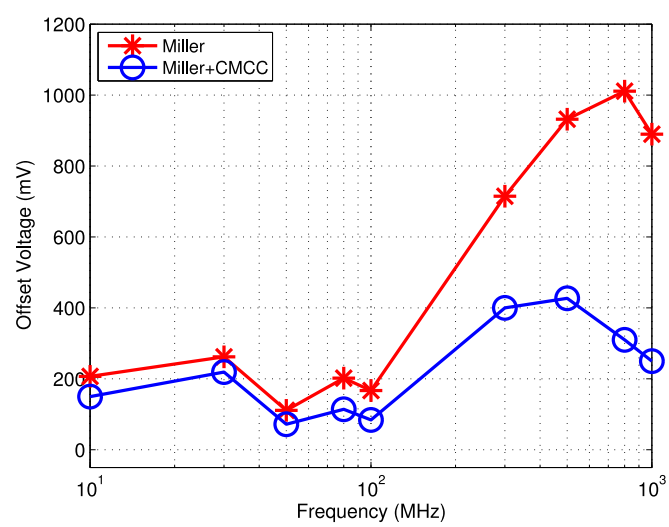

Fig. 5. Measured EMI induced offset @ 2 Vpp EMI: Comparison between the Miller amplifier and the modified Miller amplifier with CMCC.

Authorized licensed use limited to: Università degli Studi di Brescia. Downloaded on April 03,2025 at 20:26:57 UTC from IEEE Xplore. Restrictions apply.

V. Conclusion

An on-chip CMCC, which increases the immunity to EMI of operational amplifier input stages has been experimentally validated using the UMC 180 nm CMOS process.

References

[1] A. S. Poulton, "Effect of conducted EMI on the DC performances of operational amplifiers," *Electron. Lett.*, vol. 30, pp. 282–284, 1994.

[2] F. Fiori, "Design of an operational amplifier input stage immune to EMI," *IEEE Trans. Electromagn. Compat.*, vol. 49, no. 4, pp. 834–839, Nov. 2007.

[3] A. Richelli and J.-M. Redouté, "Increasing the EMI immunity of CMOS operational amplifiers using an on-chip common-mode cancellation circuit," in *Proc. Int. Symp. Electromagn. Compat. Eur. Conf.*, Gothe-borg, Sweden, Sep. 2014, pp. 698–702.

[4] A. Grassi, J.-M. Redouté, and A. Richelli, "Increased EMI immunity in CMOS operational amplifiers using an integrated common-mode cancellation circuit," in *Proc. IEEE Int. Symp. Electromagn. Compat. Eur. Conf.*, Dresden, Germany, Aug. 2015, pp. 34–39.

[5] B. Lee and T. Higman, "1V Rail-to-rail constant Gm amplifier with common-mode elimination technique," in *Proc. IEEE Int. Symp. Circuits Syst.*, 2013, pp. 385–388.

Authorized licensed use limited to: Università degli Studi di Brescia. Downloaded on April 03,2025 at 20:26:57 UTC from IEEE Xplore. Restrictions apply.