Bulk-Driven CMOS Amplifier With High EMI Immunity

Hong Ge Li, *Member, IEEE*, Hui Xin Bai, Shu Guo Xie, *Member, IEEE*, and Dong Lin Su, *Member, IEEE*

***Abstract*—This paper presents a bulk-driven CMOS amplifier with high immunity to electromagnetic interference (EMI). The approach is based on a bulk-driven input stage of MOSFET, thereby providing a low-voltage realization of a gate-driven stage. The bulk-driven amplifier includes the positive feedback, an input voltage drop, and dual input-stage symmetrical topology to improve the equivalent transconductance, dc linearity, and ac performance. As demonstrated by the measurements, the dc offset of the proposed amplifier is less than 70 mV, the measured PSD is about −66 dBm with 1 $-V_{\mathrm{PP}}$ EMI conveyed. The amplifier chip is implemented using a 0.35 μm standard CMOS process with a 1-V power supply.**

***Index Terms*—CMOS bulk-driven, dc offset, electromagnetic interference (EMI) immunity, low-voltage bioamplifier.**

I. Introduction

THE on-chip electromagnetic interference (EMI) problem is the subject of much attention in integrated circuit (IC) design due to the continued development of micro/nanoprocesses. In recent years, various problems caused by electromagnetic interference on-chip and interchip are worsening with CMOS technology scale-down and the integration level boosted [1]–[4]. The robust design of high EMI susceptibility ICs has received increasing attention. In particular, with the development of micro–nano biomedical devices and wearable intelligent electronics, such as implantable brain–computer interface devices, the development of low-voltage low-power chips with high EMI immunities has been a key challenge faced by designers. A low-power amplifier is necessary to achieve long duration and high performance for the weak signal recording; due to the weak signal of electroencephalograms (the neural potential is always less than 500 μV) [5], [6], the utilized preamplifier processing circuits are vulnerable to EMI which can generate offsets or even distortions in the recorded neural signals. Thus, the design of a highly robust low-voltage readout amplifier with high EMI immunity presents a challenge that must be addressed.

Low-voltage ICs are widely used, and various kinds of the design techniques, such as the floating-gate MOSFETs [7], the subthreshold design [8], and the bulk-driven technique [9], [11]–[14], have been developed. Among them, the bulk-driven technique is extensively exploited in low-voltage design because of its wide input-swing and ultra-low-voltage operation [14], whereas the EMI robustness of the classical bulk-driven amplifier is far from meeting application requirements due to its low equivalent transconductance and poor dc linearity. Because high EMI immunity configuration based on gate-driven MOSFETs, such as source-buffered and feedback variants [10], are unsuitable for low-voltage bulk-driven circuit, special studies on the EMI immunity of bulk-driven circuit are necessary.

In this paper, a bulk-driven CMOS amplifier with high EMI immunity is presented. The proposed amplifier is designed with the partial positive feedback, an input voltage drop, and a dual input-stage symmetrical topology to achieve the equivalent transconductance, dc linearity, and ac performance based on the bulk-driven input stage. Moreover, the amplifier can be operated using a 1-V power supply and exhibits high EMI immunity.

Section II provides a brief review of the classical bulk-driven amplifier. In Section III, we present and analyze the EMI susceptibility of the classical amplifier and the improved bulk-driven amplifier based on the offset voltage, etc. The experiment results are presented in Section IV. Section V provides the conclusion. The appendix shows the parameters derivation of proposed the bulk-driven amplifier.

II. Classical Bulk-Driven Amplifier

A. Classical Bulk-Driven Amplifier

Low-voltage low-power technology is becoming increasingly desirable due to the long duration use of biomedical devices and the scaling down of process technologies for micro/nano systems. One of the techniques that can partially overcome the difficulties introduced by the relatively high threshold voltages is based on the application of bulk-driven technologies [11], [12]. Low-voltage configurations using bulk-driven input, such as the differential amplifiers, voltage references [12], voltage follower [13], have been presented. The input stage of an amplifier, which is the most critical component, determines many of the fundamental parameters and the circuit performance.

Bulk-driven technologies are mainly used in power supplies with sub 1 V voltages. The classical bulk-driven amplifier is shown in Fig. 1(a). The input signals are applied to the bulk terminals of transistors $\mathrm{M}_{1\mathrm{A-B}}$, and their gate electrodes are connected to the lowest potential to provide an appropriate value to their quiescent gate-to-source voltage [9], [15]. A simplified cross section of a double PMOS is shown in Fig. 1(b). Parasitic PNP bipolor are also shown. The current between the source and drain is controlled by the bulk-source potential. In addition, a vertical PNP bipolar transistor and a horizontal PNP transistor are shown. The gate-source potential of the bulk-driven transistor is taken as a dc voltage that is sufficient to activate the

Manuscript received January 30, 2015; revised April 30, 2015; accepted June 29, 2015. Date of publication November 3, 2015; date of current version December 11, 2015. This work was supported by the National Natural Science Foundations of China under Grant 61271046, Grant 61427803, and Grant 61271045.

The authors are with the School of Electronic and Information Engineering, Beihang University, Beijing 100191, China (e-mail: honggeli@buaa.edu.cn; mengruohan_bhx@buaa.edu.cn; xieshuguo@buaa.edu.cn; sdl@ buaa.edu.cn).

Color versions of one or more of the figures in this paper are available online at http://ieeexplore.ieee.org.

Digital Object Identifier 10.1109/TEMC.2015.2458985

0018-9375 © 2015 IEEE. Personal use is permitted, but republication/redistribution requires IEEE permission.
See http://www.ieee.org/publications_standards/publications/rights/index.html for more information.
Authorized licensed use limited to: Universita degli Studi di Brescia. Downloaded on April 11,2024 at 08:57:41 UTC from IEEE Xplore. Restrictions apply.

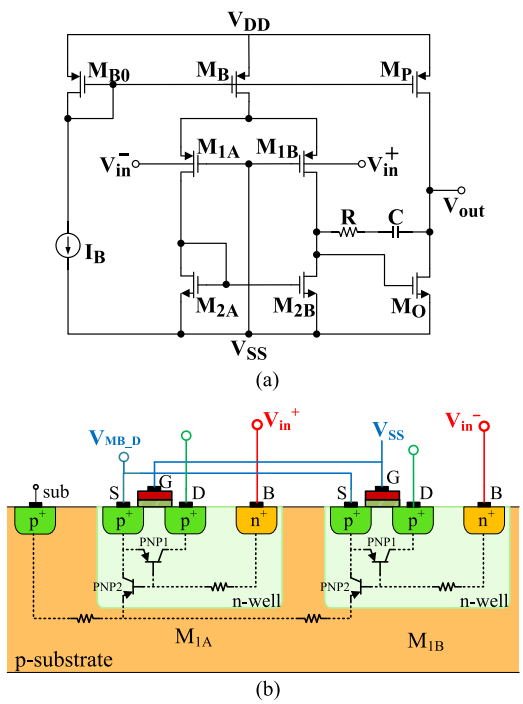

Fig. 1. Classical bulk-driven amplifier. (a) Circuit schematic. (b) Cross section of the double PMOS bulk-driven input stages of the amplifier.

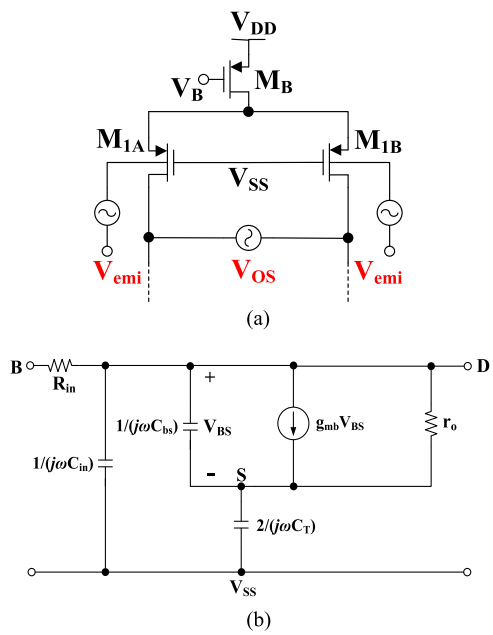

Fig. 2. Classic differential input stage with EMI signal and voltage offset (a), small-signal model circuit (b).

MOSFET. The drain is connected as usual, and the signal is applied between the bulk and the source terminal. The current flowing from the source to the drain is modulated by the reverse bias on the bulk–channel junction. The gates of both devices are tied to V_{SS} such that an inversion layer channel is formed within each MOSFET. As input pairs are isolated individual wells, a differential voltage signal is applied between the bulk terminals of $\mathrm{M_{1A}}$ and $\mathrm{M_{1B}}$.

Bulk-driven MOS transistors are always used in the case of wide input-swing low-voltage analog circuits because they can operate properly when the bulk-source junction is reverse biased, zero biased, or even weakly forward biased, with unlimited to standard V_{th}. Moreover, the bulk-driven input pairs are not subject to the risk of latch-up [9], provided that the value of the forward current through the bulk terminal is maintained at a low level and that the layout of the circuit is carefully drawn.

B. Inherent Performance of the Classical Bulk-Driven Amplifier

Certain inherent features of the classical bulk-driven amplifier result in the EMI susceptibility of the chip.

First, the main disadvantage of bulk-driven MOS transistors is that their equivalent transconductance g_{mb} is lower than the gate transconductance $\mathrm{g_m}$ under the same condition, leading to a low transition frequency f_T, low dc gain, low signal-to-noise ratio (SNR), and other limited performance measures. Insufficient f_T and SNR will cause corresponding EMI problems.

Second, the classical bulk-driven amplifier's dc response exhibits poor linearity. This behavior is due to the parasitic diodes between the source and the bulk of the input differential pair. The parasitic bulk-source diodes can turn ON when the bulk voltage decreases to near V_{SS}; therefore, the input impedance of the amplifier drops, and a large amount of the current supplied by V_{DD} flows into the bulk-source diodes, leading to the nonlinearity [16]. When the input pins are subject to EMI, the circuit's nonlinear behavior can generate harmonics, intermodulation products or dc shifts, which will degrade the circuit's performance or disable it altogether [2]. In particular, dc shifts are extremely harmful because they directly affect the quiescent operating point and may radically change the correct operating region of the given circuit.

Finally, the gate terminals of the classical bulk-driven input pair are connected with V_{SS} and are directly affected by EMI on the negative power supply. Moreover, the classical amplifier always contains a compensation structure which will weaken the circuit symmetry to some extent, leading to an asymmetrical slew rate (SR) thereby possibly generate a dc shift and limiting the EMI robustness of the circuit [10].

III. EMI Susceptibility and Bulk-Driven Amplifier Improvement

A. Analyses of the Bulk-Driven Amplifier

When a classical gate-driven differential amplifier is simultaneously driven by a common mode and a differential mode EMI disturbance, a dc shift appears along with an output offset current which is generated as a result of the parasitic capacitance of the input pair and the tail current source transistor. Similarly, the susceptibility to EMI of the classical bulk-driven amplifier in Fig. 2 can be derived. Using the expression for a MOS transistor in saturation, and expressing $V_{\mathrm{bs,i}}$ as the sum of a dc$(V_{\mathrm{BS},i})$ and

Authorized licensed use limited to: Università degli Studi di Brescia. Downloaded on April 11,2024 at 08:57:41 UTC from IEEE Xplore. Restrictions apply.

ac component ($v_{\mathrm{bs,i}}$), the output offset current is expressed as:

$$\begin{aligned} I_{\mathrm{OS}} &= \overline{I_{\mathrm{A}}} - \overline{I_{\mathrm{B}}} \\ &= \beta\left[\overline{(V_{\mathrm{gs1,A}} - V_{\mathrm{th1,A}})^2} - \overline{(V_{\mathrm{gs1,B}} - V_{\mathrm{th1,B}})^2}\right] \\ &= \beta\left[\overline{\left(V_{\mathrm{gs1,A}} - V_{\mathrm{th0}} - \gamma\sqrt{2\Phi_{\mathrm{F}} - V_{\mathrm{bs1,A}}} + \gamma\sqrt{2\Phi_{\mathrm{F}}}\right)^2}\right. \\ &\quad \left. - \overline{\left(V_{\mathrm{gs1,B}} - V_{\mathrm{th0}} - \gamma\sqrt{2\Phi_{\mathrm{F}} - V_{\mathrm{bs1,B}}} + \gamma\sqrt{2\Phi_{\mathrm{F}}}\right)^2}\right] \\ &= \beta\left[\left(\frac{g_{\mathrm{mb1,A}}}{g_{\mathrm{m1,A}}}\right)^2 \overline{v_{\mathrm{bs1,A}}^2} - \left(\frac{g_{\mathrm{mb1,B}}}{g_{\mathrm{m1,B}}}\right)^2 \overline{v_{\mathrm{bs1,B}}^2}\right] \\ &= \frac{\beta}{\eta_i^2}\left(\overline{v_{\mathrm{bs1,A}}^2} - \overline{v_{\mathrm{bs1,B}}^2}\right) \end{aligned} \tag{1}$$

where $\beta = \frac{\mu_n C_{ox}}{2} \cdot \frac{W}{L}$, and $\eta_i = \frac{g_{\mathrm{m1,i}}}{g_{\mathrm{mb1,i}}}$ (i = A,B). Parseval's density states that the total energy contained in a transient waveform is equal to the total energy of the waveform's Fourier transform summed across all of its frequency components:

$$\overline{v_{\mathrm{bs,i}}^2(t)} = \lim_{T\to\infty}\frac{1}{T}\int_{-\frac{T}{2}}^{\frac{T}{2}} v_{\mathrm{bs,i}}^2(t)\cdot dt = \int_{-\infty}^{+\infty}\left|V_{\mathrm{bs,i}}(j\omega)\right|^2 \cdot d\omega. \tag{2}$$

Expressing $V_{\mathrm{bs1,i}}(j\omega)$ in terms of the common mode ($V_{\mathrm{cm}}(j\omega)$) and the differential mode ($V_{\mathrm{dm}}(j\omega)$) input voltage yields

$$\begin{cases} V_{\mathrm{bs1,A}}(j\omega) = A_{\mathrm{cm}}(j\omega)\cdot V_{\mathrm{cm}}(j\omega) + \dfrac{V_{\mathrm{dm}}(j\omega)}{2} \\ V_{\mathrm{bs1,B}}(j\omega) = A_{\mathrm{cm}}(j\omega)\cdot V_{\mathrm{cm}}(j\omega) - \dfrac{V_{\mathrm{dm}}(j\omega)}{2} \end{cases} \tag{3}$$

where $A_{\mathrm{cm}}(j\omega)$ is the transfer function for common-mode signals, provided that $g_{\mathrm{mb1,A}} = g_{\mathrm{mb1,B}} = g_{\mathrm{mb0}}$, $C_{\mathrm{bs1,A}} = C_{\mathrm{bs1,B}} = C_{\mathrm{bs0}}$, according to the small-signal equivalent model

$$A_{\mathrm{cm}}(j\omega) = \frac{j\omega C_T}{2g_{\mathrm{mb0}} + j\omega(C_T + 2C_{\mathrm{bs0}})}. \tag{4}$$

Rewriting (1) using (2) and (3) in terms of the input equivalent offset voltage yields

$$\begin{aligned} V_{OS} &= \frac{I_{\mathrm{OS}}}{g_{\mathrm{mb0}}} = \frac{\beta}{\eta^2\cdot g_{\mathrm{mb0}}}\cdot \\ &\quad \left[\int_{-\infty}^{+\infty}\left|V_{\mathrm{bs1,A}}^2(j\omega)\right|\cdot d\omega - \int_{-\infty}^{+\infty}\left|V_{\mathrm{bs1,B}}^2(j\omega)\right|\cdot d\omega\right] \\ &= \frac{2\beta}{\eta^2\cdot g_{\mathrm{mb0}}}\int_{-\infty}^{+\infty} R_e\left\{A_{\mathrm{cm}}(j\omega)\cdot V_{\mathrm{cm}}(j\omega)\right. \\ &\quad \left.\cdot V_{\mathrm{dm}}(j\omega)\right\}\cdot d\omega \\ &= \frac{1}{\eta(V_{\mathrm{GS}} - V_{\mathrm{th}})}\int_{-\infty}^{+\infty}\left|A_{\mathrm{cm}}(j\omega)\cdot V_{\mathrm{cm}}(j\omega)\right. \\ &\quad \left.\cdot V_{\mathrm{dm}}(j\omega)\right|\cos\varphi d\omega, \\ \varphi &= \arctan\left(\frac{\mathrm{Im}\left\{A_{\mathrm{cm}}(j\omega)\cdot V_{\mathrm{cm}}(j\omega)\cdot V_{\mathrm{dm}}(j\omega)\right\}}{\mathrm{Re}\left\{A_{\mathrm{cm}}(j\omega)\cdot V_{\mathrm{cm}}(j\omega)\cdot V_{\mathrm{dm}}(j\omega)\right\}}\right). \end{aligned} \tag{5}$$

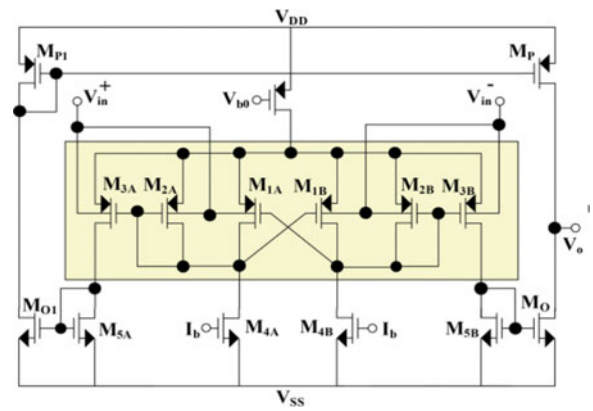

Fig. 3. Bulk-driven amplifier input stage with the partial positive feedback.

Equation (5) lists the main contributing elements to the EMI-induced input offset voltage of the classical bulk-driven differential pair. The offset is related to the transfer function of common-mode signals, the multiplication of the magnitudes of the common mode, and differential-mode EMI components and the phase between them. To decrease the offset, $|A_{\mathrm{cm}}(j\omega)|$ must be reduced as much as possible: this can be realized by properly increasing g_{mb0},$C_{\mathrm{bs0}}g_{\mathrm{mb}}$, C_{bs} and decreasing C_{T}.

B. Proposed Bulk-Driven Amplifier

According to Section A, there are three factors that need to be simultaneously applied to generate the EMI immunity including increasing the equivalent transconductance and adjusting nonlinearity in the input stage and the parasitic capacitance from source to ground. The proposed circuit configuration with high EMI immunity in this paper is mainly directed at the susceptibility of the bulk-driven input stage, including partial positive feedback, an input voltage divider, and a dual stage input structure.

1) Partial Positive Feedback: Fig. 3 shows the partial positive feedback, which is used to address the EMI problems and improves the low equivalent transconductance of the classical bulk-driven input pair [17]. The effect of this positive loop is not a problem for system stability provided that transistors $\mathrm{M_{1A-1B}}$ have a smaller aspect ratio compared to $\mathrm{M_{2A-2B}}$. The differential input signals are inputted from the bulk terminals of $\mathrm{M_{1A-1B}}$, $\mathrm{M_{2A-2B}}$, and $\mathrm{M_{3A-3B}}$. The drain voltages of $\mathrm{M_{2B-2A}}$ are fed back to the gates of $\mathrm{M_{1A-1B}}$; thus, modifying their drain currents and increasing the equivalent transconductance without the use of an extra circuit. The equivalent transconductance is (see the appendix):

$$g_{\mathrm{m,eff}} = \frac{g_{\mathrm{m1}}g_{\mathrm{mb2}} + g_{\mathrm{m2}}g_{\mathrm{mb1}}}{g_{\mathrm{m2}} - g_{\mathrm{m1}}} \tag{6}$$

where g_{mb1}, g_{m1}, and g_{mb2}, g_{m2} are the bulk transconductance and transconductance of $\mathrm{M_{1A-1B}}$ and $\mathrm{M_{2A-2B}}$. If the ratio $\frac{g_{\mathrm{m2}}}{g_{\mathrm{m1}}}$ is equal to *N*, the equivalent transconductance can be given by

$$g_{\mathrm{m,eff}} = \frac{2N}{N-1}\cdot g_{\mathrm{mb1}}\,(N > 1). \tag{7}$$

Authorized licensed use limited to: Università degli Studi di Brescia. Downloaded on April 11,2024 at 08:57:41 UTC from IEEE Xplore. Restrictions apply.

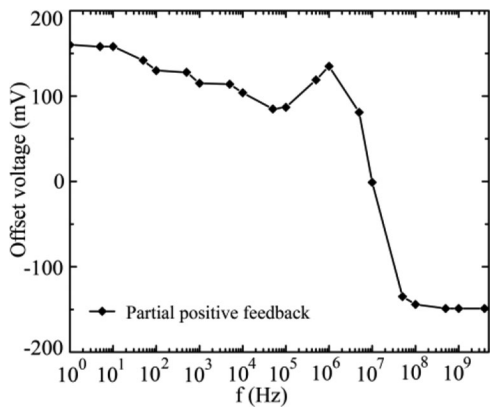

Fig. 4. Offset voltage of the bulk-driven amplifier with partial positive feedback.

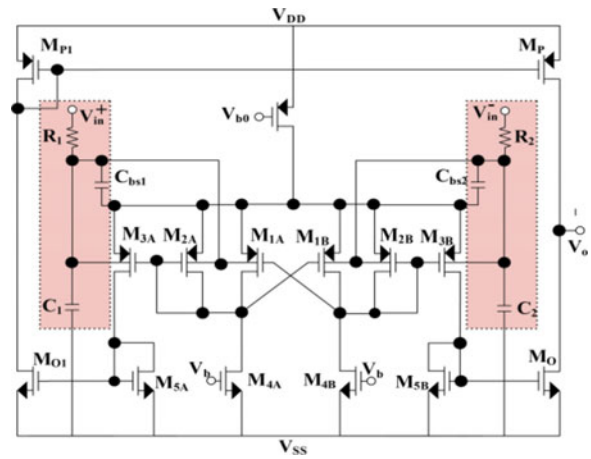

Fig. 5. Bulk-driven amplifier with voltage drop input pair.

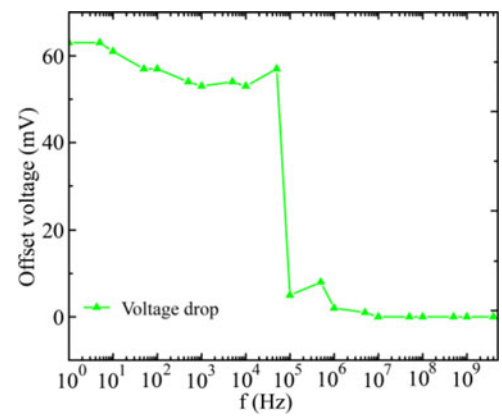

Fig. 6. Offset voltage of bulk-driven amplifier with voltage drop.

Equation (7) shows that the equivalent transconductance can be increased $\frac{2N}{N-1}$ times by appropriately choosing N. Higher transconductance improves the dc feature of circuit, as well as the SNR and f_{T}, leading to a higher EMI immunity. Moreover, according to (4), the increased equivalent transconductance can decrease $|A_{\mathrm{cm}}(j\omega)|$ to some extent, and thus improve the overall EMI immunity of the amplifier. The simulation results of the input offset voltage based on 1 $-V_{\mathrm{pp}}$ EMI conveyed are plotted in Fig. 4. The offset voltage is widely used in the measurement of EMI immunity [1], [3], and [24]. The input offset voltage of an amplifier with partial positive feedback can be approximated as follows:

$$\begin{aligned} V_{\mathrm{OS}} &= \frac{I_{\mathrm{OS}}}{g_{\mathrm{m,eff}}} = \frac{\beta}{\eta^2 \cdot g_{\mathrm{m,eff}}} \cdot \\ &\quad \left[\int_{-\infty}^{+\infty} \left|V_{\mathrm{bs1,A}}^2(j\omega)\right| \cdot d\omega - \int_{-\infty}^{+\infty} \left|V_{\mathrm{bs1,B}}^2(j\omega)\right| \cdot d\omega\right] \\ &= \frac{1}{\eta\left(V_{\mathrm{GS}} - V_{\mathrm{th}}\right)} \int_{-\infty}^{+\infty} \left|A_{\mathrm{cm}}(j\omega) \cdot V_{\mathrm{cm}}(j\omega)\right. \\ &\quad \left. \cdot V_{\mathrm{dm}}(j\omega)\right| \cos\varphi d\omega, \\ \varphi &= \arctan\left(\frac{\mathrm{Im}\left\{A_{\mathrm{cm}}(j\omega) \cdot V_{\mathrm{cm}}(j\omega) \cdot V_{\mathrm{dm}}(j\omega)\right\}}{\mathrm{Re}\left\{A_{\mathrm{cm}}(j\omega) \cdot V_{\mathrm{cm}}(j\omega) \cdot V_{\mathrm{dm}}(j\omega)\right\}}\right). \end{aligned} \tag{8}$$

2) Voltage Drop Input Pair: A solution to preventing the nonlinear dc characteristic of the classical bulk-driven amplifier is based on an input voltage drop with the *RC* circuit shown in Fig. 5. The voltage drop of the resistors R_{in}, connected to the input of the differential pair, reduces the bias voltage of the bulk-source. Choosing an appropriate resistance for R_{in} can keep the bulk-source reverse bias from being limited by the bulk voltage. Then, the dc response of the amplifier can be corrected, the nonlinearity cancelled, and the EMI susceptibility suppressed, as shown in Fig. 6. Moreover, the resistors R_{in}, along with the equivalent input capacitance C_{in} of the circuit form a low-pass filter that can equivalently suppress the high-frequency EMI. Furthermore, the capacitors C_{bs} between the bulk and the source of the input pairs can decrease the offset voltage caused by the parasitic capacitance, improving the EMI robustness over the entire frequency range, as shown in (4) and (5). The input equivalent offset voltage is

$$\begin{aligned} V_{\mathrm{OS}} &= \frac{1}{\eta \cdot \left(V_{\mathrm{GS}} - V_{\mathrm{th}}\right)} \int_{-\infty}^{+\infty} \left|A_{\mathrm{cm}}(j\omega) \cdot V_{\mathrm{cm}}(j\omega)\right. \\ &\quad \left. \cdot V_{\mathrm{dm}}(j\omega)\right| \cdot \left|\frac{1}{1 + j\omega R_{\mathrm{in}} C_{\mathrm{in}}}\right|^2 \cdot \cos\varphi \cdot d\omega \end{aligned} \tag{9}$$

where $C_{\mathrm{in}} = C_{\mathrm{bsub}} + C_1$, $C_1 = C_2$; $C_{\mathrm{bs}} = C_{\mathrm{bs0}} + C_{\mathrm{bs1}}$, $C_{\mathrm{bs1}} = C_{\mathrm{bs2}}$. According to (9), the offset voltage is significantly reduced through the use of the input voltage drop configuration, whereas certain ac features of the amplifier, such as the phase margin (PM) and the gain-bandwidth product (GBW), are weakened because of the large resistors and capacitors divider used in the input stage. When a circuit is subject to transient EMI injection, insufficient phase margins may generate overswings or jitters which can have a serious impact on the circuit itself or subsequent ones due to the conduction and coupling between circuit modules. As a result, the EMI immunity of the overall circuit or system is limited.

A major drawback of the voltage drop is the additional pole in the *RC* circuit. It must be moved far beyond the dominant pole of the amplifier to not degrade the phase margin (PM).

Authorized licensed use limited to: Università degli Studi di Brescia. Downloaded on April 11,2024 at 08:57:41 UTC from IEEE Xplore. Restrictions apply.

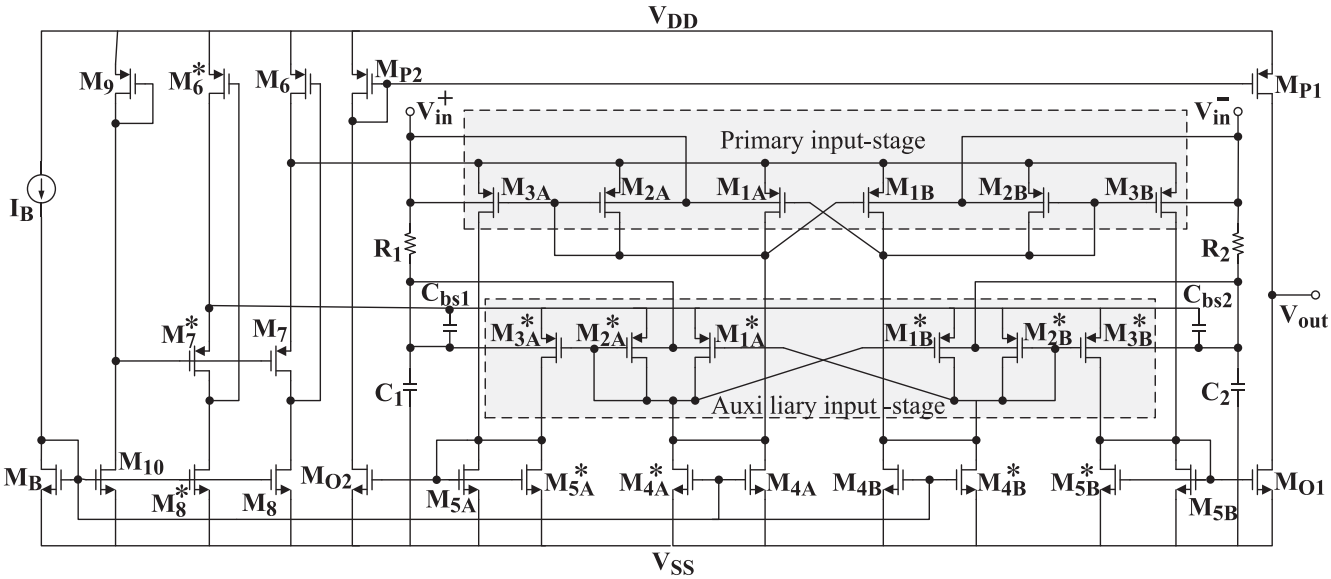

Fig. 7. Schematic of proposed bulk-driven amplifier with high EMI immunity.

Another drawback is the increase in input-referred noise due to the resistor *R*. However, because the pole has to be shifted far beyond the GBW, the resistor can be sized small enough to keep its noise contribution as negligible to the transistor noise. Alternately, the voltage drop configuration used in auxiliary stage addresses the above question.

3) Dual Input-Stage: A dual input-stage is proposed to obtain the desired ac feature of the amplifier, as shown in Fig. 7. As the resistors and capacitors divider used to improve the EMI immunity are applied to the auxiliary input stage M_i^*, the primary stage M_i is not seriously affected and the desired ac feature of the overall amplifier is ensured [18]. Sufficient PM and proper GBW are obtained through the cooperation of the dual input-stages, without additional compensation structures, avoiding the corresponding asymmetry and nonlinearity. Because of this configuration and the symmetrical output stage, the topology and SR of the overall amplifier are highly symmetrical, thereby providing strong EMI suppression. Moreover, the two input stages have the same transistors, the same aspect ratios, and the same active loads; thus, designing the desired high EMI immunity is feasible.

The proposed bulk-driven amplifier with high EMI immunity is presented in Fig. 7. The amplifier contains a primary input stage M_i and an auxiliary input stage transistor M_i^* with the same MOS transistor configuration. Taking the primary input stage as an example, the input stage of the amplifier is composed of the bulk-driven transistors M_{1A-1B}, M_{2A-2B}, and M_{3A-3B}. The transistors M_{4A-4B} and $M^*{}_{4A-4B}$ are the current mirrors of the input stage. Transistors M_6, M_7, and M_8 constitute a flipped voltage follower (FVF) that is used to stabilize the gate voltage of M_{1A-1B} and M_{2A-2B} (and the drain voltage $V_{DS,M4A-4B}$) to a predetermined voltage which is necessary for the low supply voltage operation [25].Transistors M_{O1-2} and M_{P1-2} form the symmetrical output stage. The input- stage of the bulk-driven amplifier are the most difficult to address with regard to the EMI susceptibility [20]. The EMI-induced offset of the bulk-driven amplifier resulting from the three described technologies is plotted in Fig. 8. The transistor size of the proposed amplifier is shown in Table I. To verify the robustness, simulation results with the process corner are shown in Fig. 9. Process corners represent the extremes of these parameter

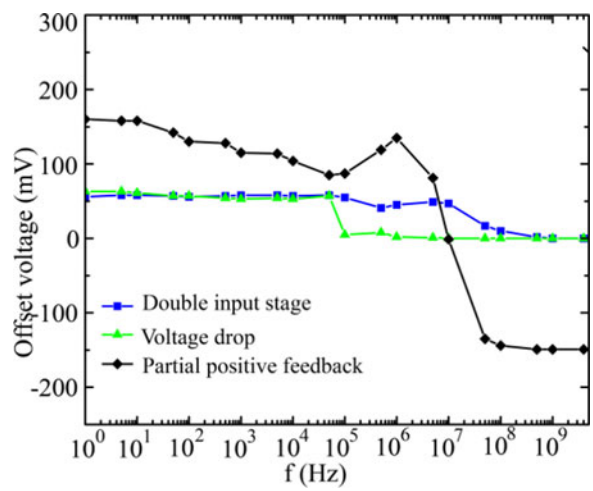

Fig. 8. Comparing three different offset voltages of bulk-driven amplifier proposed.

TABLE I
TRANSISTORS SIZE OF AMPLIFIER WITH HIGH EMI IMMUNITY

Device	W/L	Device	W/L
M_{1A-1B}	40 μm/1 μm	M_B	500 μm/1 μm
M_{2A-2B}	50 μm/1 μm	M_{O-O1}	40 μm/2 μm
M_{3A-3B}	50 μm/1 μm	M_{P-P1}	120 μm/2 μm
M_{4A-4B}	40 μm/2 μm	R_{1-2}	500 kΩ
M_{5A-5B}	40 μm/2 μm	C_{1-2}	200 fF
M_{B0}	40 μm/2 μm	C_{bs1-2}	3 pF

Authorized licensed use limited to: Università degli Studi di Brescia. Downloaded on April 11,2024 at 08:57:41 UTC from IEEE Xplore. Restrictions apply.

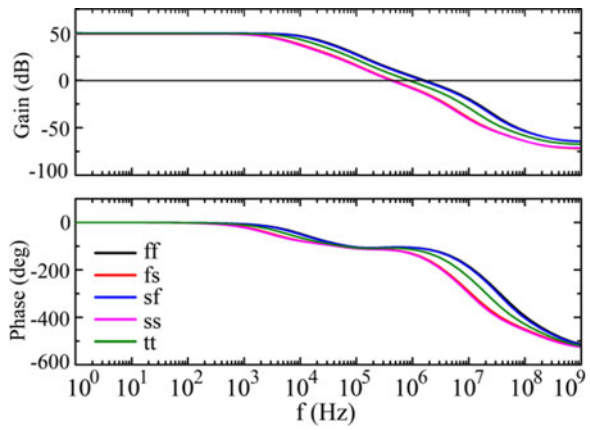

Fig. 9. Magnitude and phase response of the bulk-driven Amplifier based on five possible process corners.

variations within which a circuit that has been etched onto the wafer must correctly function.

IV. Experimental Results

The proposed bulk-driven amplifier was fabricated by using a standard 0.35-μm Global Foundries CMOS process under a supply voltage $V_{\rm DD}$ equal to 1 V. The microphotograph of the bulk-driven circuit and test platform of the PCB board are shown in Fig. 10(a) and (b), respectively. To investigate the EMI immunity level, the amplifier was measured in the voltage follower configuration; the interfering signals had been represented by a sinusoidal waveform generated with a zero dc mean value and superimposed onto the input stage. The EMI amplitude voltage was assumed to be $1V_{\rm pp}$, which is high compared to the 1 V$V_{\rm DD}$, and the frequency range was from 1 Hz up to 4 GHz, to account for the spectrum of most of the possible interfering signals.

It is worth noting that both the amplifier configuration and the interfering signal model represent the worst conditions [15]. In the voltage follower configuration, the direct connection between the output and the inverting input node forces the input stage of the differential pair to experience the largest voltage swing. Furthermore, the choice of an undammed sinusoidal waveform as an interfering signal represents a worst-case condition as well, because EMI interferences usually decay in time.

The large-signal transient response of amplifier is measured by an oscilloscope in Fig. 11. Compared with the classical bulk-driven amplifier, the proposed amplifier has a symmetrical SR, rail to rail output amplitude, and good transient characteristic. Clearly, the bulk-driven configuration removes the limit of the threshold voltage under low-supply voltage configurations.

In Fig. 12, the dc transfer characteristic of the proposed amplifier is compared to that of the classical bulk-driven amplifier and the simulation results. Obviously, the dc linearity is increased with the dual-stage voltage divider structure. Fig. 13 presents the result of the input equivalent offset voltage caused by EMI. Compared with the classical bulk-driven amplifier, the simulation results, and the measured results for the proposed amplifier, the measured offset voltage is reduced by almost an order of magnitude; the maximum offset voltage of the improved structure is less than 70 mV. The measured result shows a larger offset fluctuation than do the simulation results because of the testing environment and PCB board influence. Fig. 14 is the measured output power spectral density (PSD) of this bulk-driven amplifier. The PSD of the proposed bulk-driven amplifier is measured as being approximately -65 dBm under a 1 $-V_{\rm pp}$

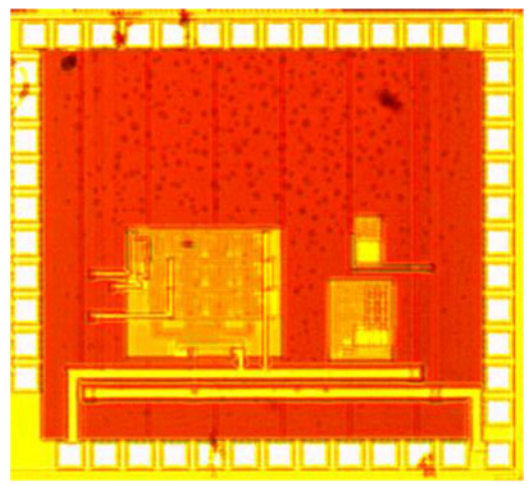

(a)

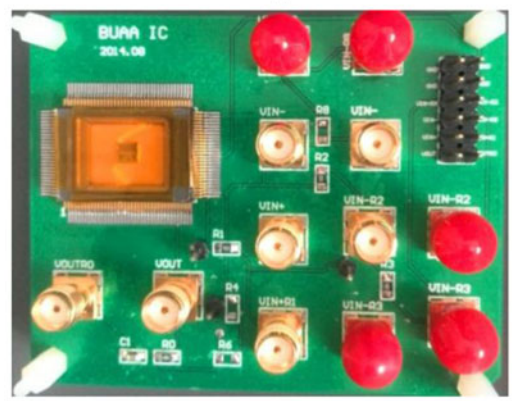

(b)

Fig. 10. Microphotograph of the proposed bulk-driven amplifier without ESD (a) and tester photo(b).

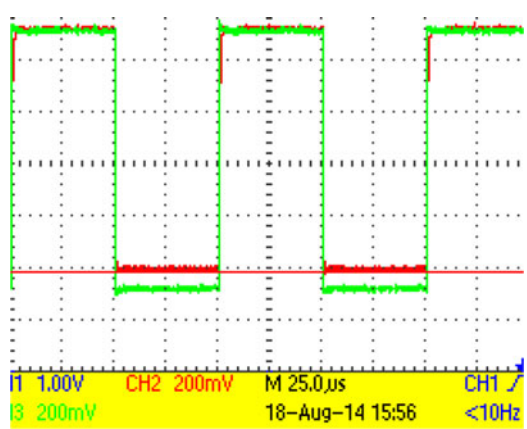

Fig. 11. Time-domain large-signal output response to a 1–$V_{\rm pp}$ 10 kHz input square waveform.

Authorized licensed use limited to: Università degli Studi di Brescia. Downloaded on April 11,2024 at 08:57:41 UTC from IEEE Xplore. Restrictions apply.

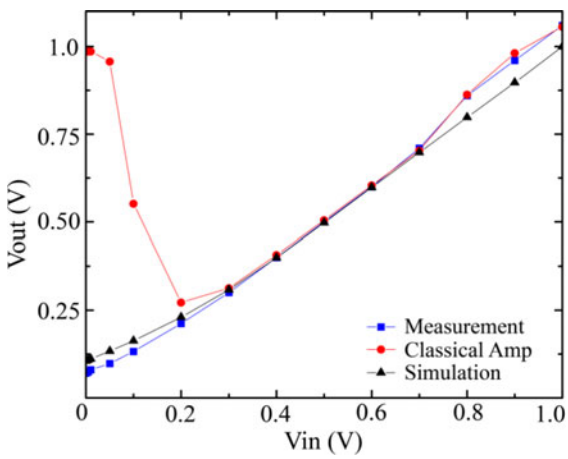

Fig. 12. DC linearity of closed-loop amplifier.

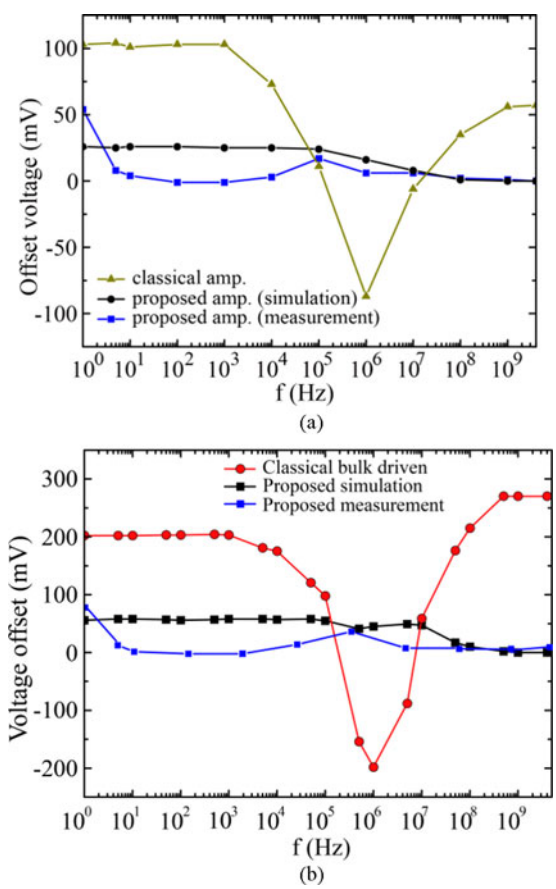

Fig. 13. Comparison of offset voltage: (a) 0.5 $V_{\rm pp}$ EMI conveyed to the input pin, (b)1 $V_{\rm pp}$ EMI conveyed to the input pin.

interference voltage. The PSD of the classical amplifier is only approximately -25 dBm. The experimental result verified Parseval's theorem regarding the frequency-domain description of the offset voltage. These measurements illustrate that the bulk-driven amplifier realize the function of high EMI immunity as a result of the linearity, dc offset, and PSD performance.

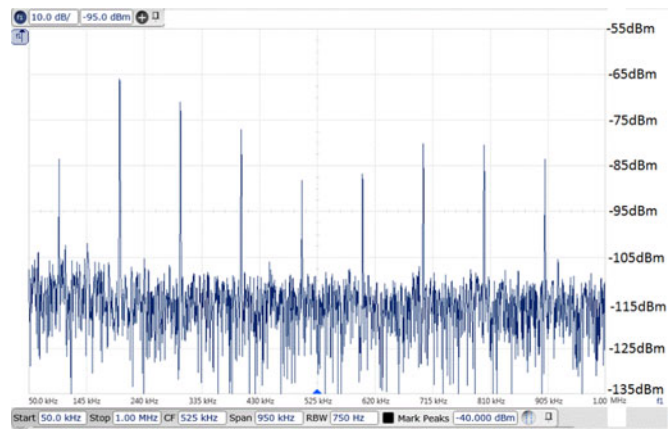

Fig. 14. Measured PSD:1 $V_{\rm pp}$, 100-kHz EMI signal conveyed to the input stage.

TABLE II
COMPARISON OF EMI-RESISTING AMPLIFIERS

Works	Process	$V_{\rm DD}$	EMI amplitude	Max offset	EMI Level β
[2]	0.35 μm	3.3 V	750 mV$_{\rm pp}$	116 mV	0.23
[3]	0.18 μm	1.8 V	650 mV$_{\rm pp}$	24 mV	0.36
[19]	0.35 μm	1.8 V	900 mV$_{\rm pp}$	28 mV	0.5
			1.8 V$_{\rm pp}$	55 mV	1
[23]	0.35 μm	1 V	800 mV$_{\rm pp}$	12 mV	0.8
This work	0.35 μm	1 V	500 mV$_{\rm pp}$	26 mV	0.5
			1 V$_{\rm pp}$	70 mV	1

Moreover, the EMI immunity of the proposed amplifier is also compared with previous works, as listed in Table II, where the reference coefficient of the EMI level $\beta = V_{\rm EMI}/V_{\rm DD}$. The amplifier's basic performance measures are also compared with those of previous low-voltage amplifiers, as listed in Table III. Obviously, the proposed amplifier can properly operate with low-power supplies, and still provide high EMI immunity.

V. CONCLUSION

The EMI susceptibility of the proposed bulk-driven amplifier with a 1 V supply has been designed to implement the high equivalent transconductance, high dc linearity, and low-offset voltage performance. The improved bulk-driven amplifier is based on a dual input-stage, partial positive feedback, and an input voltage drop. The experiment results show that the proposed amplifier is immune to EMI over the gigahertz frequency range and fit the low supply voltage, low power operation. The bulk driven amplifier is fabricated by 0.35 μm CMOS process, and the core area of the bulk-driven amplifier is 232 $\times$ 180 μm^2.

ACKNOWLEDGMENT

The authors would like to thank the reviewers for their comments.

Authorized licensed use limited to: Università degli Studi di Brescia. Downloaded on April 11,2024 at 08:57:41 UTC from IEEE Xplore. Restrictions apply.

TABLE III
COMPARISON OF BULK-DRIVEN AMPLIFIERS

Works	Process	V_{DD}	Gain	PM	SR+/SR-	CMRR at DC	PSRR at DC	Power	Load
2006 [20]	1.2 μm	1 V	87 dB	61°	0.8/1 (V/μs)	62 dB	54.5 dB	410 μW	15 pF
2005 [21]	0.18 μm	0.5 V	52 dB	–	2.89 (V/μs)	78 dB	76 dB	110 μW	20 pF
2007[22]	0.35 μm	1 V	76 dB	63°	2.74/5.02 (V/μs)	70.5 dB	45 dB	358 μW	17 pF
2013 [9]	0.35 μm	1 V	88 dB	66°	2.53/1.37 (V/μs)	40 dB	40 dB	197 μW	15 pF
This work	0.35 μm	1 V	51 dB	69°	0.7 (V/μs)	76 dB	58 dB	103 μW	15 pF

APPENDIX

The proposed bulk-driven amplifier is shown in Fig. 7. The total drain current flowing through M_{1A}-M_{1B},

$$I = \frac{1}{2}\mu_n C_{ox}\frac{W}{L}(V_{gs} - V_{th})^2$$
$$= \beta(V_{gs} - V_{th0} - \gamma\sqrt{2\Phi_F - V_{bs} + \gamma\sqrt{2\Phi_F}})^2.$$

The output offset current is expressed as follows:

$$I_{OS} = \overline{I_1} - \overline{I_2} = \beta\left[\overline{(V_{gs1} - V_{th1})^2} - \overline{(V_{gs2} - V_{th2})^2}\right]$$
$$= \beta\left[\overline{(V_{gs1} - V_{th0} - \gamma\sqrt{2\Phi_F - V_{bs1}} + \gamma\sqrt{2\Phi_F})^2}\right.$$
$$\left. - \overline{(V_{gs2} - V_{th0} - \gamma\sqrt{2\Phi_F - V_{bs2}} + \gamma\sqrt{2\Phi_F})^2}\right]$$
$$= \beta\left[\overline{(V_{gs1} - \gamma\sqrt{2\Phi_F - v_{bs1}})^2}\right.$$
$$\left. - \overline{(V_{gs2} - \gamma\sqrt{2\Phi_F - v_{bs2}})^2}\right]$$

$$I_{OS} = \beta\left[\overline{(V_{gs1} - \gamma\sqrt{2\Phi_F - V_{BS1}} + \frac{\gamma}{2\cdot\sqrt{2\Phi_F - V_{BS1}}}\cdot v_{bs1})^2}\right.$$
$$\left. - \overline{(V_{gs2} - \gamma\sqrt{2\Phi_F - V_{BS2}} + \frac{\gamma}{2\cdot\sqrt{2\Phi_F - V_{BS2}}}\cdot v_{E2})^2}\right]$$

$$I_{OS} = \beta\left[\overline{(V_{gs1} + \frac{\gamma}{2\cdot\sqrt{2\Phi_F - V_{BS1}}}\cdot v_{bs1})^2}\right.$$
$$\left. - \overline{(V_{gs2} + \frac{\gamma}{2\cdot\sqrt{2\Phi_F - V_{BS2}}}\cdot v_{bs2})^2}\right]$$
$$I_{OS} = \beta\left[\overline{(V_{gs1} + \frac{g_{mb1}}{g_{m1}}\cdot v_{bs1})^2} - \overline{(V_{gs2} + \frac{g_{mb2}}{g_{m2}}\cdot v_{bs2})^2}\right]$$
$$= \beta\left[\left(\frac{g_{mb1}}{g_{m1}}\right)^2\overline{v_{bs1}^2} - \left(\frac{g_{mb2}}{g_{m2}}\right)^2\overline{v_{bs2}^2}\right]$$
$$= \frac{\beta}{\eta^2}(\overline{v_{bs1}^2} - \overline{v_{bs2}^2}).$$

$$\overline{v_{bsi}^2(t)} = \lim_{T\to\infty}\frac{1}{T}\int_{-\frac{T}{2}}^{+\frac{T}{2}} v_{bsi}^2(t)dt = \int_{-\infty}^{+\infty}\left|V_{bsi}(j\omega)^2\right|\cdot d\omega$$

$$I_{OS} = \frac{\beta}{\eta^2}\left[\int_{-\infty}^{+\infty}\left|V_{bs1}(j\omega)^2\right|\cdot d\omega\right.$$
$$\left. - \int_{-\infty}^{+\infty}\left|V_{bs2}(j\omega)^2\right|\cdot d\omega\right]$$
$$V_{bs1}(j\omega) = H_{cm}(j\omega)\cdot V_{cm}(j\omega) + \frac{V_{dm}(j\omega)}{2}$$
$$V_{bs2}(j\omega) = H_{cm}(j\omega)\cdot V_{cm}(j\omega) - \frac{V_{dm}(j\omega)}{2}$$
$$V_{OS} = \frac{I_{OS}}{g_{mb1}} = \frac{\beta}{\eta^2\cdot g_{mb1}}\left[\int_{-\infty}^{+\infty}\left|V_{bs1}(j\omega)^2\right|\cdot d\omega\right.$$
$$\left. - \int_{-\infty}^{+\infty}\left|V_{bs2}(j\omega)^2\right|\cdot d\omega\right]$$
$$= \frac{2\beta}{\eta^2\cdot g_{mb1}}\cdot\int_{-\infty}^{+\infty} R_e\left\{H_{cm}(j\omega)\right.$$
$$\left.\cdot V_{cm}(j\omega)\cdot V_{dm}(j\omega)\right\}\cdot d\omega$$
$$= \frac{2\beta}{\eta^2\cdot g_{mb1}}\cdot\int_{-\infty}^{+\infty}\left|H_{cm}(j\omega)\cdot V_{cm}(j\omega)\right.$$
$$\left.\cdot V_{dm}(j\omega)\right|\cdot\ \cos\phi\cdot d\omega$$
$$\phi = \arctan\left(\frac{I_m\left\{H_{cm}(j\omega)\cdot V_{cm}(j\omega)\cdot V_{dm}(j\omega)\right\}}{R_e\left\{H_{cm}(j\omega)\cdot V_{cm}(j\omega)\cdot V_{dm}(j\omega)\right\}}\right)$$
$$H_{cm}(j\omega) = \frac{j\omega C_T}{2g_{mb1} + j\omega(C_T + 2C_{bs})}.$$

Regarding the *R–C* voltage drop configuration,

$$V_{OS} = \frac{2\beta}{\eta_0^2\cdot g_{mb1}}\cdot\int_{-\infty}^{+\infty}\left|H_{cm}(j\omega)\cdot V_{cm}(j\omega)\cdot V_{dm}(j\omega)\right|$$
$$\cdot\left|1 + \frac{1}{j\omega R_1 C_1}\right|\cdot\cos\phi\cdot d\omega$$
$$\left.\begin{aligned} &H_{cm}(j\omega) = \frac{j\omega C_T}{2g_{mb1} + j\omega(C_T + 2C_{bs})}\\ &R_1 = R\\ &C_1 = C + C_{bsub}.\end{aligned}\right\}$$

Considering the dual input-stage, positive feedback, and *RC* voltage drop in Fig. 7. The small-signal analysis of the

Authorized licensed use limited to: Università degli Studi di Brescia. Downloaded on April 11,2024 at 08:57:41 UTC from IEEE Xplore. Restrictions apply.

equivalent transconductance is:

$$\begin{aligned} I_{2\mathrm{A}} - I_{2\mathrm{B}} &= \mathrm{g}_{\mathrm{m}2}(V_{\mathrm{SG2A}} - V_{\mathrm{SG2B}}) + g_{\mathrm{mb}2}(V_{\mathrm{SB2A}} - V_{\mathrm{SB2B}}) \\ &= g_{\mathrm{m}2}(-V_{\mathrm{A}} - (-V_{\mathrm{B}})) + g_{\mathrm{mb}2}(-V_p - (-V_n)) \\ &= g_{\mathrm{m}2}(V_{\mathrm{B}} - V_{\mathrm{A}}) + \mathrm{g}_{\mathrm{mb}2}(V_n - V_p). \qquad ① \\ I_{1\mathrm{A}} - I_{1\mathrm{B}} &= g_{\mathrm{m}1}(V_{\mathrm{SG1A}} - V_{\mathrm{SG1B}}) + g_{\mathrm{mb}1}(V_{\mathrm{SB1A}} - V_{\mathrm{SB1B}}) \\ &= g_{\mathrm{m}1}(-V_{\mathrm{B}} - (-V_{\mathrm{A}})) + g_{\mathrm{mb}1}(-V_p - (-V_n)) \\ &= g_{\mathrm{m}1}(V_{\mathrm{A}} - V_{\mathrm{B}}) + g_{\mathrm{mb}1}(V_n - V_p) \\ I_{1\mathrm{A}} + I_{2\mathrm{A}} &= I_{1\mathrm{B}} + I_{2\mathrm{B}} = I_{\mathrm{b}}. \qquad ② \end{aligned}$$

$$① + ② = 0$$

$$(g_{\mathrm{m}2} - g_{\mathrm{m}1})(V_{\mathrm{B}} - V_{\mathrm{A}}) + (g_{\mathrm{mb}1} + g_{\mathrm{mb}2})(V_n - V_p) = 0$$

$$V_{\mathrm{B}} - V_{\mathrm{A}} = -\frac{g_{\mathrm{mb}1} + g_{\mathrm{mb}2}}{g_{\mathrm{m}2} - g_{\mathrm{m}1}}(V_n - V_p).$$

$$\begin{aligned} I_{\mathrm{out}} = I_{2\mathrm{A}} - I_{2\mathrm{B}} &= \left(-g_{\mathrm{m}2} \cdot \frac{g_{\mathrm{mb}1} + g_{\mathrm{mb}2}}{g_{\mathrm{m}2} - g_{\mathrm{m}1}} + g_{\mathrm{mb}2}\right) \\ &\quad \cdot (V_n - V_p), \\ &= \frac{g_{\mathrm{m}1} g_{\mathrm{mb}2} + g_{\mathrm{m}2} g_{\mathrm{mb}1}}{g_{\mathrm{m}2} - g_{\mathrm{m}1}}(V_p - V_n), \\ g_{\mathrm{m,eff}} &= \frac{g_{\mathrm{m}1} g_{\mathrm{mb}2} + \mathrm{g}_{\mathrm{m}2} \mathrm{g}_{\mathrm{mb}1}}{g_{\mathrm{m}2} - g_{\mathrm{m}1}}. \end{aligned}$$

REFERENCES

[1] J. M. Redouté and M. Steyaert, "EMI resisting CMOS differential pair structure," *Electron. Lett.*, vol. 42, no. 21, pp. 1217–1218, 2006.

[2] J. M. Redouté and M. Steyaert, *EMC of Analog Integrated Circuits*. New York, NY, USA: Springer, pp. 142–145, 2010.

[3] A. Pretelli, A. Richelli, L. Colalongo, and Z. M. Kovács-Vajna, "Reduction of EMI susceptibility in CMOS bandgap reference circuits," *IEEE Trans. Electromagn. Compat.*, vol. 48, no. 4, pp. 760–765, Nov. 2006.

[4] A. Richelli, "Increasing EMI immunity in novel low-voltage CMOS OpAmps," *IEEE Trans. Electromagn. Compat.*, vol. 54, no. 4, pp. 947–950, Aug. 2012.

[5] K. D. Wise, D. J. Anderson, J. F. Hetke, D. R. Kipke, and K. Najafi, "Wireless implantable microsystems: high-density electronic interfaces to the nervous system," *Proc. IEEE*, vol. 92, no. 1, pp. 76–97, Jan. 2004.

[6] H. G. Li and Q. C. Xu, "Sub-threshold based ultra-low-power neural spike detector," *Electron. Lett.*, vol. 47, no. 6, pp. 367–368, 2011.

[7] P. Hasler and T. S. Lande, "Overview of floating gate devices, circuits and systems," *IEEE Trans. Circuits Syst. II*, vol. 48, no. 1, pp. 1–3, Jan. 2001.

[8] A. Wang, B. H. Calhoun, and A. P. Chandracasan, *Sub-Threshold Design for Ultra Low-Power Systems*. New York, NY, USA: Springer, 2006.

[9] P. E. Allen, B. J. Blalock, and G. A. Rincon, "A 1 V CMOS Opamp Using Bulk-driven MOSFETs," in *Proc. IEEE Int. Solid State Circuits Conf.*, pp. 192–193, 1995.

[10] F. Michel and M. Steyaert, "Comparison of high impedance input topologies with low EMI susceptibility," *Analog Integr. Circuits Sig. Process*, vol. 65, pp. 299–309, 2010.

[11] T. Kulej, "0.5-V bulk-driven CMOS operational amplifier," *IET Circuits Devices Syst.*, vol. 7, no. 6, pp. 352–360, 2013.

[12] L. Li and C. Z. Li, "Offset error reduction using gate-bulk-driven error correction amplifier for low-voltage sub-bandgap reference," *Electron. Lett.*, vol. 49, no. 11, pp. 694–696, May 2013.

[13] Y. Haga and I. Kale, "Bulk-driven flipped voltage follower," in *Proc. IEEE Int. Symp. Circuits Syst.*, 2009, pp. 2717–2720.

[14] Z. Liang and S. K. Islam, "Low-voltage bulk-driven operational amplifier with improved transconductance," *IEEE Trans. Circuits Syst. I*, vol. 60, no. 8, pp. 2084–2091, Aug. 2013.

[15] K. Lasanen, E. Raisanen-Ruotsalainen, and J. Kostamovaara, "A 1-V 5 μW CMOS-opamp with bulk-driven input transistors," in *Proc. IEEE Midwest Symp. Circuits Syst.*, 2000, pp. 1038–1041.

[16] L. H. de Carvalho Ferreira and T. C. Pimenta, "An ultra low-voltage ultra low power rail-to-rail CMOS OTA miller," in *Proc. IEEE Asia-Pacific Conf.*, 2004, pp. 953–956.

[17] R. Wang and R. Harjani, "Partial positive feedback for gain enhancement of low-power CMOS OTAs," *Analog Integr. Circuits Sig. Process.*, vol. 8, pp. 21–35, 1995.

[18] G. Masetti, S. Graffi, D. Golzio, and Z. M. Kovcs-Vajna, "Failures induced on analog integrated circuits from conveyed electromagnetic interferences: A review," *Microelectron. Rel.*, vol. 36, no. 7–8, pp. 988–972, 1996.

[19] A. Richelli, "CMOS OpAmp resisting to large electromagnetic interferences," *IEEE Trans. Electromagn. Compat.*, vol. 52, no. 4, pp. 1062–1065, Nov. 2010.

[20] J. F. Duque-Carrillo, J. L. Ausin, and G. Torelli, "1-V rail-to-rail operational amplifiers in standard CMOS technology," *IEEE J. Solid-State Circuits*, vol. 35, no. 1, pp. 33–44, Jan. 2000.

[21] S. Chatterjee, Y. Tsividis, and P. Kinget, "0.5-V analog circuit techniques and their application in OTA and filter design," *IEEE J. Solid-State Circuits*, vol. 40, no. 12, pp. 2373–2387, Dec. 2005.

[22] J. M. Carrillo, G. Torelli, and R. Perez-Aloe, "1-V rail-to-rail CMOS opamp with improved bulk-driven input stage," *IEEE J. Solid-State Circuits*, vol. 42, no. 3, pp. 508–517, Mar. 2007.

[23] S. Sbaraini, A. Richelli, and Zs. M. Kovacs-Vajna, "EMI susceptibility in bulk-driven Miller opamp," *Electron. Lett.*, vol. 46, no. 16, pp. 1111–1113, 2010.

[24] A. Richelli, M. Gilbert, and J.-M. Redouté, "Design of a folded cascade opamp with increased immunity to conducted electromagnetic interference in 0.18 lm CMOS," *Microelectron. Rel.*, vol. 55, no. 3/4, pp. 654–661, 2015.

[25] R. G. Carvajal, J. Ramirez-Angulo, A. J. Lopez-Martin, A. Torralba, and F. M. Chavero, "The flipped voltage follower: A useful cell for low-voltage low-power circuit design," *IEEE Trans. Circuits Syst. I*, vol. 52, pp. 1276–1291, Jul. 2005.

Hong Ge Li (M' 09) received the Ph.D. degree from the Graduate School of Information Sciences, Tohoku University, Sendai, Japan, in 2005.

From 2006 to 2008, he was an Assistant Professor of Tohoku University, Department of Bioengineering and Robotics. He is currently an Associate Professor with the School of Electronic Information Engineering, Beihang University, Beijing, China. His current research interests include micro/nanointegrated circuits, OLED/LCD display drivers, immunity to electromagnetic interferences, biosignal processing, and crossover study methodologies for real-time hybrid systems. He is author or coauthor of more than 50 scientific papers in journals and international conferences, including IEEE JDT\TED\EMC\IET, Mciroelec. Re., ISCAS and is inventor of seven patents.

Hui Xin Bai was born in Hebei, China, in 1990. She received the M.S. degree in electronics science and technology from Beijing University of Aeronautics and Astronautics, Beijing, China, in 2015.

She is currently working in the Civil Aviation University of China, Tianjin, China. Her research interests include low-voltage analog integrated circuits and its EMI suppression design.

Authorized licensed use limited to: Università degli Studi di Brescia. Downloaded on April 11,2024 at 08:57:41 UTC from IEEE Xplore. Restrictions apply.

Shu Guo Xie (M'03) received the M.S. and Ph.D. degrees in radio physics from Wuhan University, Wuhan, China, in 1992 and 2001, respectively.

He started his work at Wuhan University in 1992. He joined Beihang University, Beijing, China, in 2006, and is currently a Professor in the School of Electronic Information Engineering. In 1996, he was a Visiting Researcher at Laboratoire de Physique et Chimie de l'Environnement, CNRS, France. His research interests include radio wave propagation, antenna design, electromagnetic compatibility and its measurement, and macromodeling of electronic equipment.

Dong Lin Su (M'96) received the B.S., M.S., and Ph.D. degrees in electrical engineering from Beihang University (BUAA), Beijing, China, in 1983, 1986, and 1999, respectively.

She joined the Faculty of the Department of Electrical Engineering, School of Electronics and Information Engineering, BUAA, in 1986, where she was first an Assistant, then a Lecturer, and later on, an Associate Professor, and where she is currently a Professor and the Deputy Dean of the School of Electronic and Information Engineering. From 1996 to 1998, she finished her Ph.D. research under a BUAA-UCLA Joint Ph.D. Program in the Electrical Engineering Department, University of California at Los Angeles (UCLA). Her research interests include the numerical methods for microwave and millimeter-wave integrated circuits. And currently, she is involved in the research of "top to down, systemic, quantificational EMC design methodology" for various aircrafts. She is the author of more than 80 papers and the coauthor of several books.

Dr. Su is a Senior Member of the Chinese Institute of Electronics. She is currently the Chair of AP-Section of Beijing Chapter, IEEE, China of URSI-B China and the Deputy Chair of Antennas Society, Chinese Institute of Electronics. She received a National Award for Science and Technology Progress in 2007.

Authorized licensed use limited to: Università degli Studi di Brescia. Downloaded on April 11,2024 at 08:57:41 UTC from IEEE Xplore. Restrictions apply.