Calibration-Less Nauta OTA Operating at 0.25-V Power Supply in a 130-nm Digital CMOS Process

Rodrigo A. S. Braga, Luís H. C. Ferreira, Gustavo D. Colletta, Odilon O. Dutra
Institute for Systems Engineering and Information Technology
Federal University of Itajuba
Email: rodrigobraga@unifei.edu.br, luis@unifei.edu.br, gustavo.colletta@unifei.edu.br, odutra@unifei.edu.br

***Abstract*—This work presents an architecture for Nauta fully differential operational transconductance amplifier that requires no additional circuitry for calibration. This design operates with a power supply of 0.25-V, implemented in a 130-nm digital CMOS process. By operating in the weak inversion region and using the transistor array approach, this OTA shows voltage reduction and stable gain using halo implanted transistors. The proposed OTA can operate at a voltage range from 0.15-V to 0.35-V, consuming only 6-nW to 333-nW of power and presenting a measured transconductance of 2.24-μS at 0.25-V. This makes it suitible for low-power G_m-C filters, such as biquad, which needs a wider range of frequencies (30-Hz to 6-kHz).**

I. Introduction

The CMOS fully-differential operational transconductance amplifier known as Nauta OTA [1] (Fig. 1) has been designed for very high frequencies G_m-C filters. As the circuit from Fig. 1 uses only CMOS inverters, it can be fabricated in a nanometer-scale digital CMOS process optimized for digital circuits, such as halo-implants CMOS transistors. These halo implants are used to overcome short channel effects (such as DIBL) in CMOS transistors, but they decrease the output impedance even for long channel transistors, affecting the analog operation. Moreover, the variations in halo-implants process cause deviations in the threshold voltage, increasing the mismatch in the CMOS process [2].

According to [1], the performance of Nauta OTA in filters or others aplications is dependent on the perfect matching among the inverters. To achieve this perfect matching, some strategies using circuitry for trimming [3], biasing [4]–[6] and non standards CMOS transistors [7], [8] have been reported in the literature.

In this work, we show a simple approach to improve the gain and overall operation of Nauta OTA without any additional circuitry, power or biasing sources using only standard halo-implanted CMOS transistors from a nanometer-scale digital process. We demonstrate that by applying an array of unity transistors it is possible to overcome the low output impedance and parameters mismatch of halo-implanted transistors. Thus, we describe a calibration-less Nauta OTA, designed to operate at 0.25-V, presenting a measured tunable gain of 10-dB@0.15-V, 25-dB@0.25-V and 35-dB@0.35-V, fabricated in a 130-nm digital CMOS process, suitable for low-power applications. The following sections provide the details of our approach.

978-1-5090-5859-4/17/$31.00 ©2017 IEEE

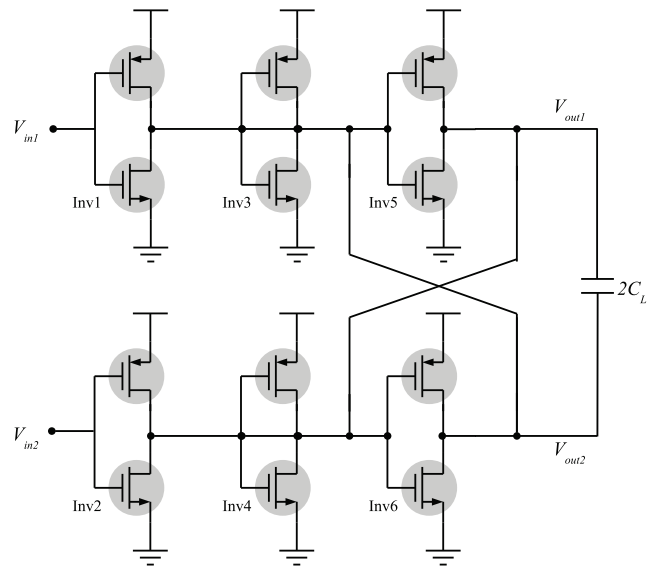

Fig. 1. Schematic circuit for Nauta OTA [1].

II. Weak Inversion Operation

In order to reduce the power consumption, this work makes use of Nauta OTA operating in weak inversion. The drain current I_{DS} of a long channel MOS transistor operating in weak inversion is based on the channel diffusion current. When $V_{DS} \geq 3kT/q$ the transistor will be saturated and I_{DS} can be given by

$$I_{DS} = I_S \left(\frac{W}{L}\right) \exp\left(q\frac{V_{GS} - V_{TH}}{nkT}\right) \tag{1}$$

where I_S is the characteristic current and n the slope factor in weak inversion. All the others symbols have their usual meanings.

As the major contribution of this work, we use an array of unity halo-implanted CMOS transistors to address the halo implants constraints discussed in section I. The array of unity CMOS transistors, shown in Fig. 2, is similar to a symmetric self-cascode composite transistor, but it uses a $m \times p$ series-parallel association with transistors of the same aspect ratio, as proposed by [9]. This structure has been used in [10]–[12] to increase the output impedance in halo-implanted analog circuits. The use of an array of unity halo-implanted CMOS transistors also mitigates the threshold voltage shifts

Authorized licensed use limited to: Università degli Studi di Brescia. Downloaded on July 25,2024 at 07:41:59 UTC from IEEE Xplore. Restrictions apply.

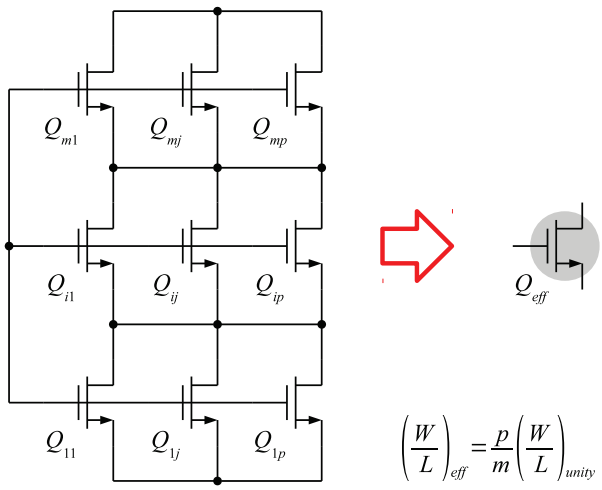

Fig. 2. An array of m x p unity halo-implanted nMOS transistors (on the left) and its effective single composite halo-implanted nMOS transistor (on the right) [10].

for longer channel transistors, so this value becomes equal to the threshold voltage of an unity halo implanted transistor in the array [10]. In fact, the array of unity halo-implanted CMOS transistors has the property to reduce the mismatch among the CMOS inverters of Nauta OTA. From basic statistics, we know that $\sigma_{\bar{\gamma}} = \sigma/\sqrt{n}$, were σ is the population standard deviation, $\sigma_{\bar{\gamma}}$ is the standard deviation of the means and n is the size of the sample. Assuming that n is a sample of all possible halo-implanted transistors in a die, the standard deviation of the means ($\sigma_{\bar{\gamma}}$) can be seen as the mistmach among the transistors, so, to reduce the mismatch, we can enlarge the array dimensions. This approach is suitable to improve the matching requirements of Nauta OTA and the results validate this property.

III. Proposed Nauta OTA

Before obtaining the model for Nauta OTA in the weak inversion operation we need to analyse a CMOS inverter under this operation region. The output current for a CMOS inverter can be given by $I_{OUT} = I_{DN} - I_{DP}$. Assuming that both transistors of the inverter, pMOS and nMOS, are in the saturation region in the weak inversion operation, I_{DN} and I_{DP} can be obtained from (1) as

$$I_{DN} = \underbrace{I_{S_N}\left(\frac{W}{L}\right)_N \exp\left(-q\frac{V_{TH_N}}{nKT}\right)}_{I_{S_{INV}}} \exp\left(q\frac{V_{GS}}{nKT}\right), \quad (2)$$

$$I_{DP} = \underbrace{I_{S_P}\left(\frac{W}{L}\right)_P \exp\left(-q\frac{V_{TH_P}}{nKT}\right)}_{I_{S_{INV}}} \exp\left(q\frac{V_{SG}}{nKT}\right). \quad (3)$$

Due to carriers mobility difference and parameters variations related to the fabrication process, the values of I_{S_P} and I_{S_N}, as well as V_{TH_P} and V_{TH_N}, are different for pMOS and nMOS transistors. However, using appropriate values for $(W/L)_P$ and $(W/L)_N$ we can rewrite (2) and (3) replacing all these terms by a single $I_{S_{INV}}$ term. For an input voltage of V_{IN}, we have $V_{GS} = V_{IN}$ and $V_{SG} = V_{DD} - V_{IN}$, thus the output current for the CMOS inverter, I_{OUT}, is

$$I_{OUT} = I_{S_{INV}}\left[\exp\left(q\frac{V_{IN}}{nKT}\right) - \exp\left(q\frac{V_{DD}-V_{IN}}{nKT}\right)\right]. \quad (4)$$

For bias the inverter, we apply a common-mode input voltage, V_{CM}, equal to $V_{DD}/2$. So, by replacing V_{IN} by $V_{DD}/2$ in (4) we can define the DC transconductance of the inverter, G_m, as

$$G_m \equiv \frac{\partial I_{OUT}}{\partial V_{IN}} = 2q\frac{I_{S_{INV}}}{nKT}\exp\left(q\frac{V_{CM}}{nKT}\right). \quad (5)$$

According to (5) the DC transconductance of the inverter varies exponentially with the supply voltage, since $V_{CM} = V_{DD}/2$. Therefore, the DC current gain for inverter in weak inversion operation degrades as supply voltage reduces.

The model for Nauta OTA can be driven from circuit in Fig. 1. As described in [1], the differential output current, I_{od}, of Nauta OTA is defined as $I_{od} = I_{out1} - I_{out2}$, so, applying in inputs V_{in1} and V_{in2} the signals

$$V_{in1} = V_{CM} + \frac{1}{2}v_{in} \text{ and } V_{in2} = V_{CM} - \frac{1}{2}v_{in}, \quad (6)$$

we can find the expressions for I_{out1} and I_{out2} replacing V_{IN} by V_{in1} and V_{in2}, respectively, in (4). Thus, it is possible to define the differential output current, I_{od}, as

$$I_{od} = 4I_{S_{INV}}\exp\left(q\frac{V_{CM}}{nKT}\right)\sinh\left(q\frac{v_{in}}{2nKT}\right). \quad (7)$$

The AC transcondutance, g_{m_d}, is given by

$$g_{m_d} \equiv \frac{\partial I_{od}}{\partial v_{in}} = 2q\frac{I_{S_{INV}}}{nkT}\exp\left(q\frac{V_{CM}}{nKT}\right)\cosh\left(q\frac{v_{in}}{2nKT}\right), \quad (8)$$

and using G_m from (5), g_{m_d} can be rewritten as

$$g_{m_d} = G_m\cosh\left(q\frac{v_{in}}{2nKT}\right). \quad (9)$$

When $v_{in} = 0$, $g_{m_d} = G_m$, therefore g_{m_d} also depends on power supply, since it depends on G_m. This allow us to conclude that the transcondutance of Nauta OTA operating in weak inversion is controlled by the power supply, in the same way found in [1].

A. Small-Signal Model and Frequency Response

From Fig. 1, the transistors of inverters Inv3 and Inv4 are connected as conductances $g_{m_{p3}}$, $g_{m_{n3}}$, $g_{m_{p4}}$ and $g_{m_{n4}}$ between the output nodes and common-mode voltage, V_{CM}. We also can see from Fig. 1 that the inverters Inv5 and Inv6 injects current $-(g_{m_{p5}}+g_{m_{n5}})v_{out_1}$ and $-(g_{m_{p6}}+g_{m_{n6}})v_{out_2}$ in conductances of inverters Inv3 and Inv4, respectively [1].

Therefore, the small-signal model for the circuit in Fig. 1 is presented in Fig. 3, and we define the equation for v_{out_1} and v_{out_2} as

$$v_{out_1} = \frac{(g_{m_{p1}}+g_{m_{n1}})v_{in_1} - (g_{m_{p6}}+g_{m_{n6}})v_{out_2}}{g_{o_{p1}}+g_{o_{n1}}+g_{m_{p3}}+g_{m_{n3}}+g_{o_{p6}}+g_{o_{n6}}} \quad (10)$$

$$v_{out_2} = \frac{(g_{m_{p2}}+g_{m_{n2}})v_{in_2} - (g_{m_{p5}}+g_{m_{n5}})v_{out_1}}{g_{o_{p2}}+g_{o_{n2}}+g_{m_{p4}}+g_{m_{n4}}+g_{o_{p5}}+g_{o_{n5}}}. \quad (11)$$

Authorized licensed use limited to: Università degli Studi di Brescia. Downloaded on July 25,2024 at 07:41:59 UTC from IEEE Xplore. Restrictions apply.

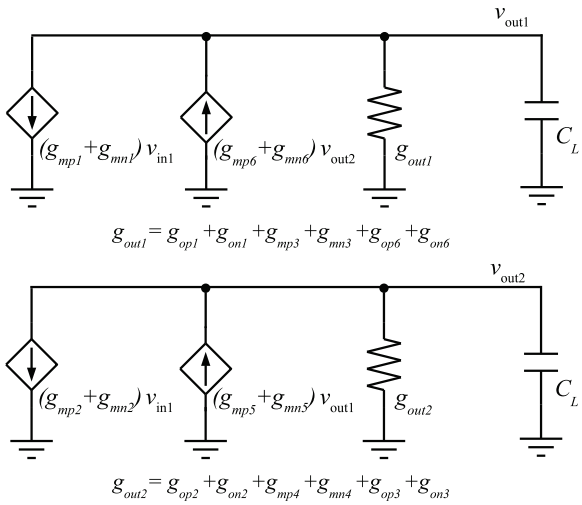

Fig. 3. Small-signal model for Nauta OTA.

TABLE I
MONTE CARLO SIMULATION FOR GAIN (1000 RUNS).

Gain (dB)@0.15-V	**Matched**	**Mean**	**StDev**	**StDev/Mean (%)**
Array 1x1	15.00	16.82	8.18	48.65%
Array 2x2	15.18	15.49	2.30	14.83%
Array 4x4	13.94	13.94	0.95	6.78%
Array 8x8	12.89	12.86	0.41	3.22%
Array 16x16	12.70	12.71	0.21	1.64%
Gain (dB)@0.25-V	**Matched**	**Mean**	**StDev**	**StDev/Mean (%)**
Array 1x1	21.14	20.76	9.47	45.60%
Array 2x2	25.49	27.73	8.55	30.83%
Array 4x4	28.94	30.65	7.48	24.41%
Array 8x8	30.74	31.10	4.00	12.86%
Array 16x16	30.58	30.77	1.62	5.26%
Gain (dB)@0.35-V	**Matched**	**Mean**	**StDev**	**Mean/StDev (%)**
Array 1x1	22.44	21.73	9.26	42.59%
Array 2x2	27.36	29.69	9.20	31.01%
Array 4x4	23.31	34.20	8.26	24.15%
Array 8x8	37.10	38.46	7.54	19.60%
Array 16x16	41.23	43.23	7.14	16.51%

As the inverters *Inv3* and *Inv6* have the same *DC* operating point we can assume $g_{m_{p3}} \approx g_{m_{p6}}$ and $g_{m_{n3}} \approx g_{m_{n6}}$. Similarly, for the inverters *Inv1* and *Inv6*, $g_{o_{p1}} \approx g_{o_{p6}}$ and $g_{o_{n1}} \approx g_{o_{n6}}$. The same analysis is possible for inverters *Inv4* e *Inv5*. By these relations and assuming $v_{out_1} = -v_{out_2}$, the output voltages, v_{out1} and v_{out2}, can be rewritten as

$$v_{out_1} = \frac{g_{m_{p1}} + g_{m_{n1}}}{2(g_{o_p} + g_{o_n})} v_{in_1} \text{ and } v_{out_2} = \frac{g_{m_{p2}} + g_{m_{n2}}}{2(g_{o_p} + g_{o_n})} v_{in_2}. \quad (12)$$

Since inverters *Inv1* and *Inv2* have the same operating point $g_{m_{p1}} \approx g_{m_{p2}}$ and $g_{m_{n1}} \approx g_{m_{n2}}$, the relation between output voltages of Nauta OTA, $v_{out_1} - v_{out_2}$, is

$$v_{out_1} - v_{out_2} = \frac{g_{m_p} + g_{m_n}}{2(g_{o_p} + g_{o_n})}(v_{in_1} - v_{in_2}). \quad (13)$$

From (10) - (13) we can conclude that, for an increase in voltage gain of Nauta OTA, the condutance of the transistors used in the inverters Inv1, Inv2, Inv5 and Inv6 should be as small as possible, resulting in the greatest possible output impedance. This conclusion also justify the use of an array of unity halo-implanted transistors, presented in section II, to improve the output impedance. Finally, the expression for gain, A_o, can be directly obtained from (13):

$$A_o = \frac{v_{out_1} - v_{out_2}}{v_{in_1} - v_{in_2}} = \frac{g_{m_p} + g_{m_n}}{2(g_{o_p} + g_{o_n})}. \quad (14)$$

Manipulating (14), considering that the load capacitor, C_L, is big enough to disconsider the internal transistors capacitances, the unity gain frequencies can be given by

$$\omega_u = \frac{g_{m_p} + g_{m_n}}{C_L}. \quad (15)$$

IV. RESULTS AND DISCUSSION

The proposed calibration-less Nauta OTA has been built with pMOS and nMOS arrays of unity halo-implanted CMOS transistors with dimensions $m \times p$ equal to 1x1, 2x2, 4x4, 8x8 and 16x16, designed and simulated in Cadence Spectre and fabricated in IBM 130-nm CMOS process by MOSIS. All pMOS transistors in the array have their width-to-length ratio equal to (2.0-μm/2.0-μm) and the nMOS transistors have width-to-length ratio equal to (0.4-μm/0.6-μm), which leads threshold voltages equal to 230-mV and 140-mV, respectively, and the slope factor equal to 1.16 [10]. The inverters have been designed for $V_{CM} = V_{IN} = V_{OUT} = 0.125$-V to a power supply of 0.25-V, using six pMOS and three nMOS arrays of unity halo-implanted CMOS transistors, allowing the weak inversion operation. Also, a estimated testbench load capacitance of 30-pF has been connected to each output of Nauta OTA for the simulation. The measurement testbench have been composed by a Semiconductor Analyzer B1500A and a Dynamic Signal Analyzer DSA35670A, operating at room temperature (27°C).

Table I shows the gain values of Nauta OTA for different transistors arrays dimensions over process parameters variation, using Monte Carlo analysis (1000 runs), for three power supply voltages (0.15-V, 0.25-V and 0.35-V). The results indicate that larger arrays are more robust in the presence of process variations, as discussed in section II. Therefore, it decreases the inverters mismatch improving the gain of Nauta OTA and reducing the standard deviation. So, when transistors arrays enlarge, the mean of gain approaches to the perfect matched inverters condition.

Figure 4 shows the measured frequency response for 7 samples, in 7 different dies, of Nauta OTA 1x1 and 16x16, supplied with 0.25-V. The mean and standard deviation of gain for low frequencies is 24.69-dB and 0.65-dB for Nauta OTA 16x16, 14.38-dB and 7.33-dB for Nauta OTA 1x1, resulting in mean/stdev ratio of 2% and 53%, respectively. This allows us to conclude that the array of unity halo-implanted CMOS transistors is capable of improving the matching condiction required by Nauta OTA, without any additional circuitry, power or biasing sources for calibration. In fact, beyond the

Authorized licensed use limited to: Università degli Studi di Brescia. Downloaded on July 25,2024 at 07:41:59 UTC from IEEE Xplore. Restrictions apply.

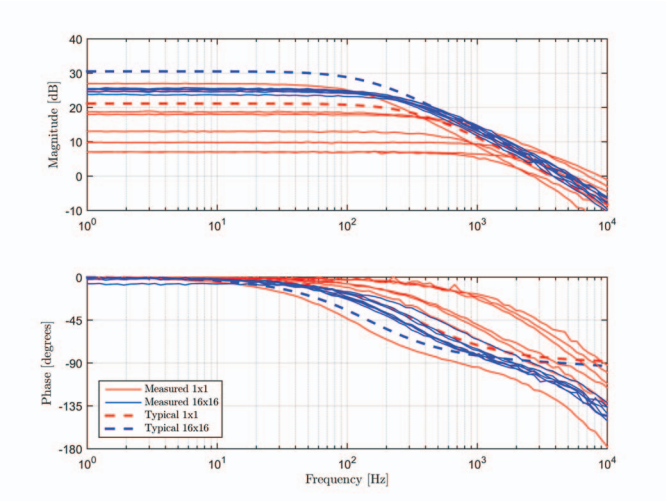

Fig. 4. Frequency response of Nauta OTA 1x1 and 16x16 for $V_{DC} = 0.25$-V (7 samples).

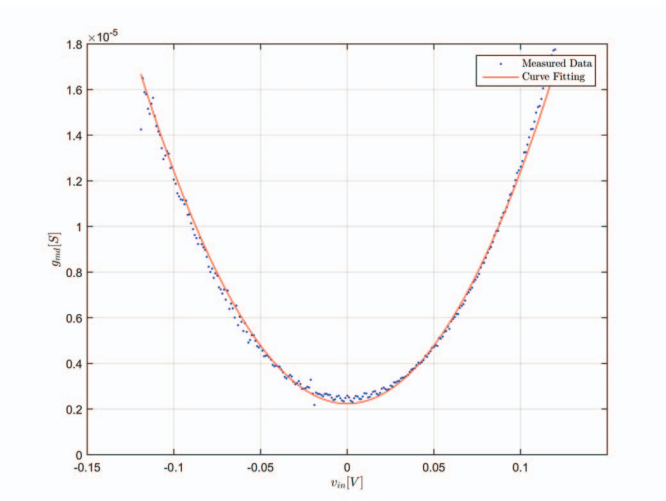

Fig. 5. Trancondutance of Nauta OTA 16x16 for $V_{DC} = 0.25$-V.

gain, the array structure also improves the phase margin and unity gain frequency matching requirements.

In Fig. 4 the dashed lines represent the simulation of frequency response for Nauta OTA 1x1 and 16x16. For Nauta OTA 16x16 there is a 5-dB difference, this indicates that the fabricated array of unity halo-implanted CMOS transistors has a smaller output impedance than expected in the simulation as already shown in [10].

In Fig. 5, the measured transcondutance for Nauta OTA with $V_{DC} = 0.25$-V is similar to the hyperbolic cosine (fitting of 99%), as determined in (9). For $v_{in} = 0$, we have $g_{m_d} = G_m \approx 2.24$-$\mu$S, so the proposed Nauta OTA becames suitable for low power applications which needs high frequencies G_m-C filters, such as biquad.

V. Conclusion

This paper presented a simple and efficient way to reduce mismatch problems in Nauta OTA using arrays of unity halo-implanted CMOS transistors. This technique improves the gain without additional circuitry for trimming, biasing or use of non standard CMOS transistors. Our approach allows an OTA operation in ultra-low power supply such as 0.15-V to 0.35-V and stable gain of 10-dB to 35-dB in a commercial 130-nm digital CMOS fabrication process. We also show that the constraints imposed by the nanometer CMOS process can be overcome for designs of low voltage low power analog circuits such as Nauta OTA.

Acknowledgment

This work was supported in part by the Brazilian National Council of Technological and Scientific Development (PQ 303041/2015-3 and GD 160622/2015-8).

References

[1] B. Nauta, "A CMOS transconductance-C filter technique for very high frequencies," *IEEE Journal of Solid-State Circuits*, vol. 27, no. 2, pp. 142–153, 1992.

[2] S. Chakraborty, A. Mallik, C. K. Sarkar, and V. R. Rao, "Impact of halo doping on the subthreshold performance of deep-submicrometer CMOS devices and circuits for ultralow power analog/mixed-signal applications," *IEEE Transactions on Electron Devices*, vol. 54, no. 2, pp. 241–248, 2007.

[3] A. Iberzanov, A. Nicholson, J. Jenkins, T. Lehmann, and T. J. Hamilton, "Calibration of the Nauta structure differential OTA," in *2014 IEEE Asia Pacific Conference on Circuits and Systems (APCCAS)*. IEEE, 2014, pp. 189–192.

[4] S. Vlassis, "0.5V CMOS inverter-based tunable transconductor," *Analog Integrated Circuits and Signal Processing*, vol. 72, no. 1, pp. 289–292, 2012.

[5] R. Arya, G. Souliotis, S. Vlassis, and C. Psychalinos, "A 0.5V tunable complex filter for Bluetooth and Zigbee using OTAs," *Analog Integrated Circuits and Signal Processing*, vol. 79, no. 1, pp. 73–81, 2014.

[6] S. Kumaravel, A. Gupta, and B. Venkataramani, "VLSI implementation of gm-C filter using modified Nauta OTA with double CMOS pair," in *2011 IEEE Recent Advances in Intelligent Computational Systems (RAICS)*. IEEE, 2011, pp. 216–220.

[7] A. Pirmohammadi and M. H. Zarifi, "A low power tunable gm-C filter based on double CMOS inverters in 0.35 μm," *Analog Integrated Circuits and Signal Processing*, vol. 71, no. 3, pp. 473–479, 2012.

[8] F. Munoz, A. Torralba, R. Carvajal, J. Tombs, and J. Ramirez-Angulo, "Floating-gate-based tunable CMOS low-voltage linear transconductor and its application to HF gm-C filter design," *IEEE Transactions on Circuits and Systems II: Analog and Digital Signal Processing*, vol. 48, no. 1, pp. 106–110, 2001.

[9] C. Galup-Montoro, M. C. Schneider, and I. J. Loss, "Series-parallel association of FET's for high gain and high frequency applications," *IEEE Journal of Solid-State Circuits*, vol. 29, no. 9, pp. 1094–1101, 1994.

[10] L. H. C. Ferreira and S. R. Sonkusale, "A 60-dB gain OTA operating at 0.25-V power supply in 130-nm digital CMOS process," *IEEE Transactions on Circuits and Systems I: Regular Papers*, vol. 61, no. 6, pp. 1609–1617, 2014.

[11] G. D. Colletta, L. H. C. Ferreira, and T. C. Pimenta, "A 0.25-V 22-nS symmetrical bulk-driven OTA for low-frequency gm-C applications in 130-nm digital CMOS process," *Analog Integrated Circuits and Signal Processing*, vol. 81, no. 2, pp. 377–383, 2014.

[12] O. O. Dutra, L. H. C. Ferreira, and T. C. Pimenta, "Implementation of an ultra-low-power dynamic translinear loop at 0.25-V with halo-implanted 130-nm MOSFETs," *Analog Integrated Circuits and Signal Processing*, vol. 83, no. 3, pp. 311–316, 2015.

Authorized licensed use limited to: Università degli Studi di Brescia. Downloaded on July 25,2024 at 07:41:59 UTC from IEEE Xplore. Restrictions apply.