Design considerations for an Ultra-Low Voltage Amplifier with High EMI Immunity

Anna Richelli
Dept. of Electronics
University of Brescia
Brescia, Italy
Email: anna.richelli@ing.unibs.it

***Abstract*— In this paper a class AB CMOS operational amplifier is devised. It is based on a two stages strongly symmetrical topology, very attractive in order to minimize the effects of disturbances arising from a wide class of sources. The amplifier can be fabricated in standard CMOS technology and is suitable for the low voltage supply of current integrated circuits. Simulation results, in terms of EMI immunity, are presented and compared with classical architectures.**

I. Introduction

Due to the increasing adoption of electronic and microelectronic equipments, the immunity to electromagnetic interferences is becoming an important constraint for integrated circuit designers. Electromagnetic interferences (EMI) effects, indeed, may involve a wide class of circuits.

Furthermore, the level of electromagnetic environmental pollution has been increasing during the last years because of the wider and wider diffusion of wireless local area networks (WLANs). The amplitude of EMI, which is collected by wires and printed circuit board (PCB) traces, has consequently increased and may be comparable with the amplitude of nominal signals or even larger, leading to failures on the integrated circuits (ICs) exposed to EMI [1], [2], [3].

As a consequence, IC designers have to consider EMI during design phase: *a posteriori* layout adjustments, filters, change in the operating frequency, shielding are, indeed, seldom viable and often complex and expensive.

Therefore, in recent years, EMIs were carefully investigated [3] both theoretically and experimentally in order to find possible prevention methodologies, in particular in high-performance digital/analog ICs that may include several operational amplifiers. The most sensitive circuits to EMI are, indeed, the analog ones and, among them, the Operational Amplifiers (OpAmps) [3].

Recently, has been demonstrated that a successful approach to reduce the EMI susceptibility of the OpAmp is the adoption of symmetrical topologies [4]-[8]; unfortunately, the high EMI immunity architectures presented in previous works are unsuitable for the low voltage supply of the current ICs. On the other hand a lot of work has been devoted to design low voltage amplifiers, as demonstrated in [9] -[11].

In what follows, a highly symmetrical CMOS amplifier will be devised, well suitable for ultra-low voltage applications. The proposed OpAmp can be powered at less than 500mV and exhibits a high EMI immunity.

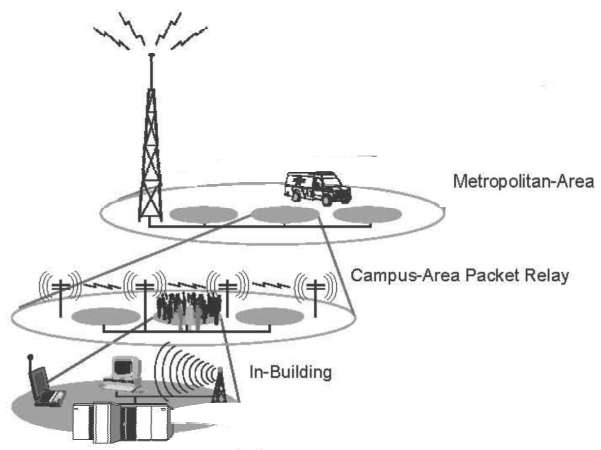

Fig. 1. Electromagnetic pollution

In section II the state-of-art topologies will be presented and the proposed amplifier will be devised, in section III the simulation results will be discussed and in section IV some conclusions will be drawn.

II. High EMI immunity design

A. State-of-Art

In previous works [2], [3] it was assessed that the interfering signals may propagate mainly in two different ways: conduction and radiation. However, considering the chip size and the working frequencies of possible electronic systems that act as EMI sources, the conduction seems at the moment the most relevant way of propagation.

Hence, in order to investigate the EMI effects on a generic amplifier, the interfering signals are often represented by a sinusoidal waveform generated with zero DC mean value and superimposed on the pins connected to long wires (long wires, indeed, act as antennas for EMI). This assumption represents a worst case condition, because the interfering signal often decays in time. Furthermore, the amplifier is in the voltage follower configuration, as reported in literature [3], [4], [14], since it is a worst case condition [3] as well.

978-1-4244-2182-4/08/$25.00 ©2008 IEEE.

Authorized licensed use limited to: Università degli Studi di Brescia. Downloaded on April 03,2025 at 20:30:10 UTC from IEEE Xplore. Restrictions apply.

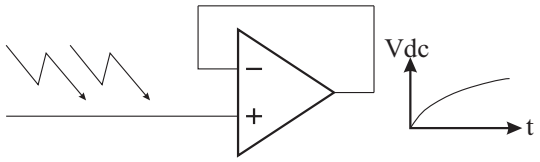

Fig. 2. Effect of the EMI on the input pin

One of the most undesirable effects of interferences is the shift of the output DC mean value (offset) that may asymptotically force the amplifier to saturation, as depicted in Fig. 2; this unexpected behavior of the OpAmp transient response is mainly due to the parasitic capacitances and to the asymmetry of signal paths during the positive and the negative period of the sinusoidal waveform.

Concerning the EMI superimposed to the power pins, easy filtering can prevent the dangerous DC offset to be formed [15]; the interfering signals conveyed on the input pins of the operational amplifier are rather more difficult to prevent. This is due to the fact that the adoption of external filters may modify the original input signals, often very weak, and, therefore, it should be avoided.

Recently, a lot of work was devoted to intrinsically improve the immunity of the amplifiers and many solutions were proposed. For example, in [12]-[13] the design of an input stage immune to EMI is reported, based on a double differential pair along with a simple RC filter. However, as stated above, a filter may modify the response of the amplifier and, thus, it can just operate at out-of-band frequencies, while the EMI effect are relevant also at low-medium frequencies.

A succesful approach to intrinsically reduce the EMI effects, without adding any kind of filter, is presented in [5] and is based on the design of strongly symmetrical topologies. In [14] the OpAmps EMI susceptibility was, indeed, correlated to the slew rate asymmetry and to the unequal parasitic capacitances which play a significant role, respectively, at low-medium frequencies and at high frequencies, outside the working bandwidth. The symmetrical topology proposed in [5] is based on two identical fully differential source cross-coupled amplifier, combined in cascade connection in order to achieve a large gain. The circuital scheme is shown in Fig. 3. This topology is very useful when the output slew rate of the OpAmp is an important task; moreover such a scheme leads to a strong symmetry of the output voltage thanks to the mirrored path of the signals.

B. Proposed Architecture

The architecture proposed in [5] is unfortunately not suited for the ultra-low voltage supply of current integrated circuits. This is mainly due to the complex cascode connections. Therefore, an alternative solution is proposed derived from the Miller amplifier. The overall schematic is shown in Fig. 4

It is based on a fully differential stage with active loads. The input stage is a classical differential pair with a current source $M5$. The drains of the input devices $M1$ and $M2$ are tied to the active loads $M3$ and $M4$ and cross-connected to

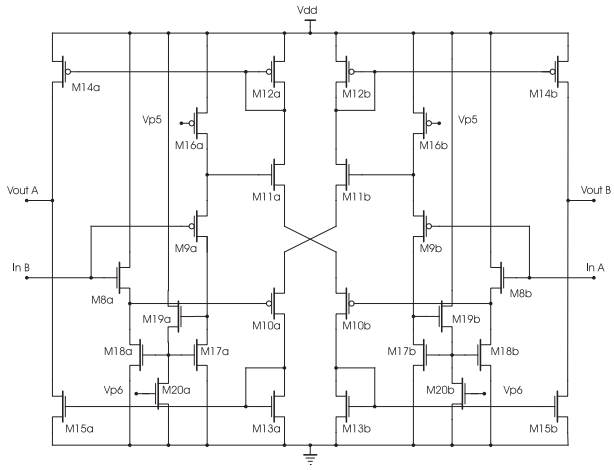

Fig. 3. Fully differential source cross-coupled amplifier

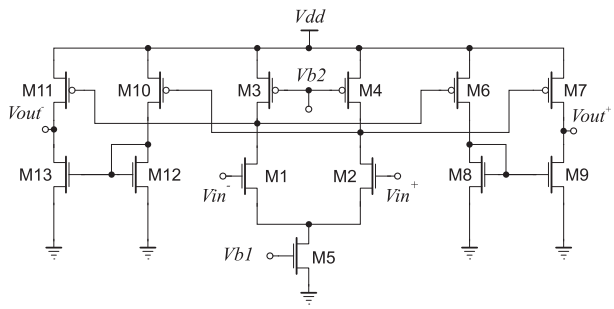

Fig. 4. Ultra-low voltage fully differential amplifier

the specular current mirrors $M6 - M9$ and $M10 - 13$. This scheme allows for symmetrical slew rates and, more general, to quite symmetrical transient response of the amplifier.

It is worth stressing that the symmetry of the amplifier does not derive from sophisticated layout technique but from the architecture itself. Furthermore, the proposed amplifier is based on the classical Miller topology and, thus, it is suitable for ultra-low voltage supply.

The simulated OpAmp exhibits a gain of 70.4dB, a bandwidth of 1.89MHz and a phase margin of 78°; the positive slew rate is of about 0.78V/μs and the negative slew rate is of 0.74V/μs. The power supply was assumed to be 500mV and the common mode can range between 150mV and 300mV.

In the proposed OpAmp, a NMOS input stage has been designed as an example; nevertheless, in standard n-well technology, a PMOS input stage may enhance the noise rejection and the immunity to EMI arising from the power supply.

C. Layout of the proposed architecture

Many analog applications are quite susceptibile to errors due to layout. In circuits in which devices need to be matched, as for example in the design of high EMI immunity OpAmp, layout becomes a very critical factor.

As stated in literature and above, the high immunity to Electromagnetic Interferences can be achieved thanks to a high symmetrical topology. Therefore, the advantages of the symmetry

Authorized licensed use limited to: Università degli Studi di Brescia. Downloaded on April 03,2025 at 20:30:10 UTC from IEEE Xplore. Restrictions apply.

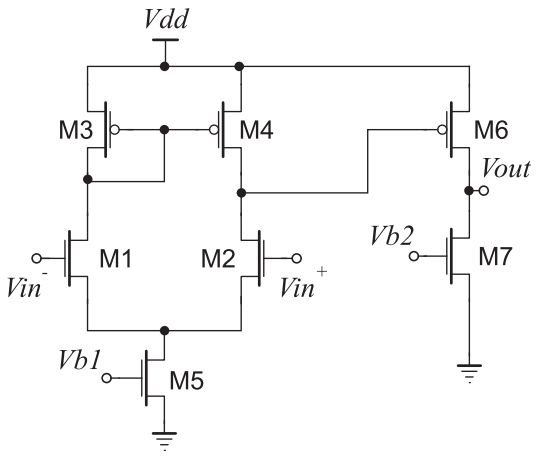

Fig. 5. Single-ended Miller amplifier

should be preserved also in the layout and The OpAmp should be designed taking a special care. In particular, concerning the circuit in Fig. 4, the devices M1-M2, M3-M4, M6-M7-M10-M11 and M8-M9-M12-M13 need to be matched. Therefore, these devices are splitted into parallel devices, interdigitizing them in order to distribute process gradients, thus improving matching. A good solution is to lay out the critical devices in a common-centroid arrangement. Furthermore, a large use of dummy strips in matched devices was done, symmetrical metal paths for the signals was designed and substrate contacts (guard rings) was added for suppression of substrate noise and improved reliability.

III. Results

In order to verify the immunity to Electromagnetic Interferences, the proposed amplifier has been designed using UMC 0.18um standard low-threshold CMOS technology (in this process, NMOS devices exhibit a threshold of about 100mV, depending both on the biasing conditions and on the transistor channel lenght; PMOS devices exhibit a threshold of about 200mV). Moreover, a classical single-ended Miller topology, shown in Fig. 5, has been designed and simulated. Both the amplifiers have a gain of 70dB, a gain-bandwidth product of 2MHz, more than 70° phase margin and 500mV power supply.

The interfering signals have been represented by a sinusoidal waveform generated with zero DC mean value and superimposed to the input pin, while the amplifiers were in the voltage follower configuration, as shown in Fig. 2. The EMI amplitude was assumed to be 500mVpp, a very large value compared to the 500mV Vdd, and the frequency range was from 1MHz up to 4GHz, in order to account for the spectrum of many of the possible interfering signals including the cellular phone bands.

Many cycles of simulations were performed on the circuits extracted from the layout using typical, slow and fast transistor models and the results (in the worst case) are shown in Fig. 6.

In this figure, the offset of the proposed amplifier is compared

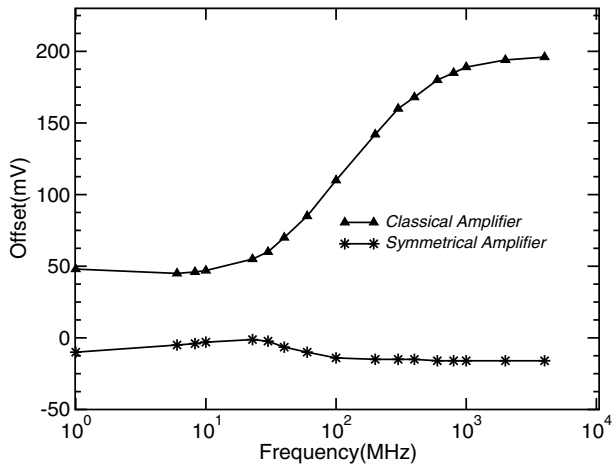

Fig. 6. 500mVpp EMI conveyed to the input pin: proposed amplifier vs. classical topology

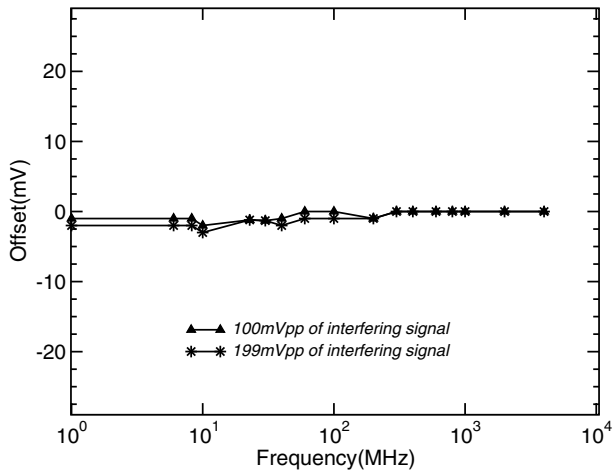

Fig. 7. 100mVpp and 199mVpp EMI conveyed to the input pin: offset of the proposed amplifier

to the one of a classical topology, having similar performances (gain, bandwidth, and so on). The proposed amplifier shows a EMI susceptibility reduced by more than one order of magnitude: the maximum offset caused by EMI is, indeed, of a few tens of millivolts, while the offset of the Miller amplifier (in the same operating conditions) ranges from 50mV up to 200mV.

Simulations were also performed with interfering signals of 100mVpp and 199mVpp, as in the Electromagnetic Compatibility Standard EN-61000, and the simulation results are shown in Fig. 7. As expected, the proposed amplifier exhibits a negligible offset.

Moreover, to further test the EMI immunity, the OpAmp has been exposed to interferences on the power pins as well. The amplitude of the interfering signals has been assumed to be

Authorized licensed use limited to: Università degli Studi di Brescia. Downloaded on April 03,2025 at 20:30:10 UTC from IEEE Xplore. Restrictions apply.

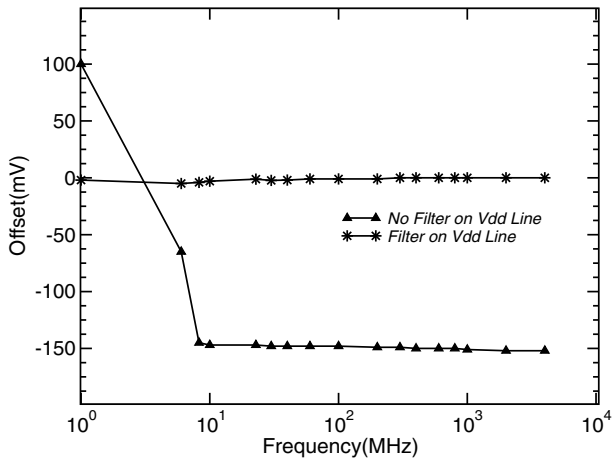

Fig. 8. 500mVpp EMI conveyed to the Vdd pin: filtered vs. no-filtered power line

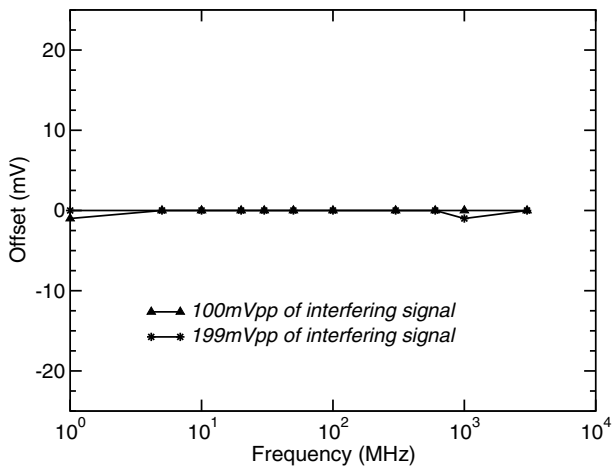

Fig. 9. 100mVpp and 199mVpp EMI conveyed to the Vdd pin: offset of the proposed amplifier

500mVpp, as in the case of EMI conveyed to the input pin. The results of the simulations are reported in Fig. 8: as stated above, a simple RC filter may reduce the susceptibility of the amplifier. It is worth noting that in integrated circuits the overall power lines associate a parasitic capacitance which behaves as a distributed low pass filter. Moreover, adding external capacitors to the power pins as filter is an easy and inexpensive improvement. Obviously, the same does not hold for the input pins because they have bandwidth requirements.

Simulations were also performed with interfering signals of 100mVpp and 199mVpp, that represent typical power line noises, and the results are shown in Fig. 9.

It is worth adding that the International Electrotechnical Commission (IEC), along with the International Special Committee on Radio Interferences (CISPR), is one of the standard bodies that have decided to address the need for standardized IC EMC test methods and directives for emissions and susceptibility.

IV. Conclusions

This paper has addressed a new approach to design a CMOS operational amplifier which provides a strong immunity to electromagnetic interferences (EMI).

The proposed OpAmp has a symmetrical topology, based on two main stages derived from the classical Miller architecture and, thus, well suited for the current ultra-low voltage power supply.

The simulations on the circuits extracted from the layout show a low susceptibility to EMI conveyed both to the input and the power pins. The EMI effects on the proposed amplifier are reduced by more than one order of magnitude compared to the classical topologies.

References

[1] C. R. Paul, *Introduction to Electromagnetic Compatibility*, John Wiley and Sons, 1992.

[2] A. S. Poulton, "Effect of conducted EMI on the DC performances of operational amplifiers", *Electronics Letters*, 1994, Vol. 30, pp. 282-284.

[3] G. Masetti, S. Graffi, D. Golzio, Zs. Kovacs "Failures Induced on Analog Integrated Circuits from Conveyed Electromagnetic Interferences: a Review", *Microelectronics and Reliability*, 1998, Vol.38, pp. 1143

[4] G. Setti, N. Speciale "Design of a Low EMI Susceptibility CMOS Operational Amplifier", *Microelectronics and Reliability*, 1998, Vol.38, pp. 1143.

[5] A. Richelli, L. Colalongo, Zs. Kovacs, M. Quarantelli "Design of an integrated CMOS operational amplifier with low probability EMI induced failures", *Proc. ESSCIRC01*, Villach, 2001, pp. 376-379.

[6] A. Richelli, L. Colalongo, Zs. Kovacs "Increasing the Immunity to Electromagnetic Interferences of CMOS Operational Amplifiers", *IEEE Transactions on Reliability*, Vol. 52, No. 3, pp. 349-353, Sep. 2003.

[7] A. Richelli, L. Colalongo, M. Quarantelli, Zs. Kovacs "Robust design of low EMI susceptibility CMOS OpAmp", *IEEE Transactions on Electromagnetic Compatibility*, Vol. 46, No. 2, pp. 291-298, May 2004.

[8] A. Pretelli, A. Richelli, L. Colalongo, Zs. Kovacs "Reduction of EMI susceptibility in CMOS bandgap reference circuits", *IEEE Transactions on Electromagnetic Compatibility*, Vol. 48, No. 4, pp. 760-765, Nov. 2006.

[9] J.F. Duque-Carillo, J.L. Ausin, G. Torelli, J.M. Valverde, M.A. Deminguez "1-V rail-to-rail operational amplifiers in standard CMOS technologies", *IEEE Journal of Solid state Circuits*, Vol. 35, No. 1, pp. 33-44, Jan. 2000.

[10] T. Stockstad, H. Yoshizawa "A 0.9V 0.5-uA rail-to-rail CMOS operational amplifier", *IEEE Journal of Solid State Circuits*, Vol. 37, No. 3, pp. 286-292, Mar. 2002.

[11] H.F. Achigui, C.J.B. Fayomi, M. Sawan "1-V DTMOS-Based Class-AB Operational Amplifier: Implementation and Experimental Results", *IEEE Journal of Solid State Circuits*, Vol. 41, No. 11, pp. 2440-2448, Nov. 2006.

[12] F. Fiori "Design of an Operational Amplifier Input stage Immune to EMI", *IEEE Transactions on Electromagnetic Compatibility*, Vol. 49, No. 4, pp. 834-839, Nov. 2007.

[13] C. Walravens, S. Van Winckel, J.M. Redoute, M. Steyaert "Efficient reduction of electromagnetic interference effects in operational amplifiers", *Electronics Letters*, Vol. 43, No. 2, pp. 84-85, Jan. 2007.

[14] G. Masetti, G. Setti, N. Speciale, "On the key Role of parasitic Capacitances in the Determination of Susceptibility to EMI of Integrated Operational Amplifiers", *Proc. EMC99*, Zurich, 1999.

[15] Zs. M. Kovács-Vajna, E. Sardini, N. Speciale, "Chaotic Behaviour of 741 OpAmps Subjected to EMI Conveyed to Power Supply Rails", *Proc. ISCAS00*, Geneva, 2000, Vol. 1, pp. 727-730.

Authorized licensed use limited to: Università degli Studi di Brescia. Downloaded on April 03,2025 at 20:30:10 UTC from IEEE Xplore. Restrictions apply.