Proc. of the 2018 International Symposium on Electromagnetic Compatibility (EMC Europe 2018), Amsterdam, The Netherlands, August 27–30, 2018.

Design of a Self-Cascoded Miller Amplifier with Superior EMI Immunity in UMC 180nm CMOS

Carmelo Zuccarotto, Anna Richelli
Dept. of Information Engineering
University of Brescia
Brescia, Italy
Email: anna.richelli@ing.unibs.it

Simon Kennedy, Jean-Michel Redouté
Dept. of Electrical and Computer Systems Engineering
Monash University
Melbourne, Australia
Email: jean-michel.redoute@monash.edu

***Abstract*—This paper presents a complementary Miller operational amplifier architecture designed with self-cascoded devices exhibiting a superior robustness to electromagnetic interference (EMI). A prototype circuit was designed, fabricated and experimentally validated in the UMC 180nm CMOS process: the complementary self-cascoded Miller amplifier has a DC gain of 62dB, an a gain-bandwidth product equal to 220MHz. Measurements confirm that the EMI-induced offset of the complementary self-cascoded Miller amplifier is decreased by more than 50% with respect to the regular self-cascoded Miller amplifier.**

I. Introduction

Integrated circuits can be subjected to conducted electromagnetic interference (EMI) which is received through the relatively long printed circuit board tracks [1]-[2]. As reported in earlier works, operational amplifiers are particularly sensitive to EMI which is injected in their input terminals [3]-[5]. This sensitivity is exacerbated by the reduced supply voltage which is the result of the increasing integration scale and subsequent reduction in feature size. The latter results in a reduced output impedance due to channel length modulation which, in turn, reduces the attainable intrinsic voltage gain. In order to increase the output impedance, cascoded structures can be used: unfortunately, these require a larger voltage headroom and consequently decrease the output signal swing. For this reason, traditional cascoded structures are impractical to use in low voltage systems and modern submicron integrated processes.

A promising alternative is the use of self-cascoded (SC) devices [6]-[8], depicted in Fig. 1. SC devices have been introduced recently and are widely used in low voltage circuits in order to reduce the channel length modulation effect without requiring an increased supply voltage and without limiting the output voltage swing. SC devices can be used, for example, in a Miller amplifier, which is a two stage amplifier widely used in CMOS analog integrated circuits. In a Miller self-cascoded amplifier, each transistor is replaced with its self-cascoded counterpart. Unfortunately, when exposed to EMI injected in the operational amplifier's input terminals, an EMI-induced DC shift is generated which can debias subsequent stages. As previous works described, this is in part due to the asymmetric slew rate, leading to a large EMI induced offset at low to medium frequencies [9].

This paper introduces a complementary self-cascoded Miller amplifier exhibiting a superior EMI robustness. The paper is structured as follows. In Section II, the properties of self-cascoded transistors are described, following their application and use in Miller-type operational amplifier designs. Section III develops the mathematical analysis of the resulting EMI-induced offset, and shows that a complementary differential input stage can be used to cancel the latter. In Section IV, the complementary self-cascoded Miller amplifier is introduced and compared to the regular self-cascoded Miller amplifier: next, measurements (Section V) show the increased EMI immunity of the complementary SC Miller amplifier when EMI is injected in its input terminals. Section VI concludes this paper.

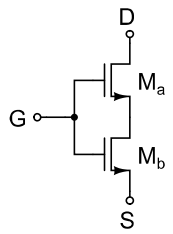

Fig. 1. N-type self-cascoded device.

II. Self-Cascoded Circuit

The SC device is formed by two transistors (M_a and M_b in Fig. 1). Transistor M_a is in saturation, whereas M_b operates in triode. To optimize the SC device's performance, the width of M_a is m times larger than the width of M_b ($m > 1$) [6]-[7]. Moreover, if the technology allows triple well, the body effect can be overcome and the threshold voltage reduced through a proper bulk biasing scheme [8]. The SC device can be modelled as a transistor with the following small signal parameters:

$$g_{mSC} = \frac{g_{ma}}{m} = g_{mb} \tag{1}$$

$$r_{oSC} = r_{oa} + r_{ob} + g_{mb} \cdot r_{oa} \cdot r_{ob}, \tag{2}$$

where g_m represents the transconductance and r_o is the output resistance. The main advantage of the SC device compared to the telescopic cascoded architecture is the minimal voltage headroom required to bias the transistors: additionally, as shown in the above expressions, the self-cascoded transistors exhibit a larger equivalent output resistance, without compromising the transconductance. This is of paramount importance

978-1-4673-9608-1/18/$31.00 © 2018 IEEE

Authorized licensed use limited to: Università degli Studi di Brescia. Downloaded on April 13,2025 at 15:08:46 UTC from IEEE Xplore. Restrictions apply.

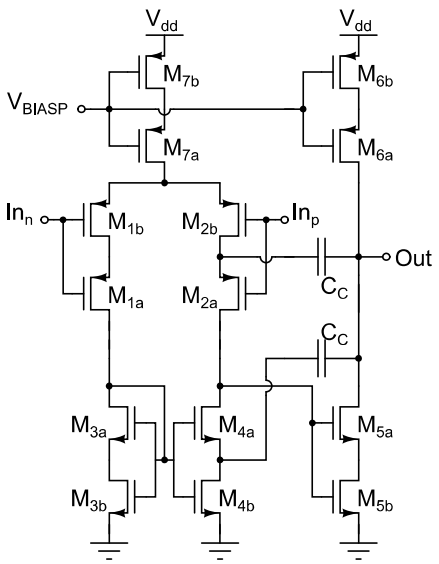

Fig. 2. The SC amplifier with pseudo cascode compensation [8].

to design a high gain amplifier requiring a reduced voltage compliance.

A Miller amplifier can be redesigned using SC devices, and allows for a different frequency compensation, referred to as pseudo cascode compensation [8] (Fig. 2): this frequency compensation technique desensitizes the stability of the opamp with respect to the scaling of its bias current. The small signal gain of the circuit in Fig. 2 is similar to the one obtained with a classical Miller amplifier, providing that the equivalent gm and ro are those of the SC devices.

Unfortunately, the SC Miller opamp exhibits an asymmetric slew rate (SR) leading to a significant EMI induced offset at low to medium EMI frequencies: a prototype design validating this has been simulated in the UMC 180nm technology: as expected, the maximum simulated EMI induced offset when EMI is injected in the input terminals exceeds hundreds of mV for EMI signal with 1Vpp amplitude at low-medium EMI frequencies.

III. Analysis of the EMI Induced Offset in the SC Miller Amplifier

When electromagnetic interference is injected in the input pins of an operational amplifier, the latter generates an EMI-induced offset voltage because of the nonlinear distortion taking place in the input differential pair [9]-[11]. Refer to the differential pair shown in Fig. 3. The interference causes a change of the bias current I_O given by:

$$\Delta I_D = \frac{g_p V_{dm} V_{cm} |Y(j\omega)|}{2} cos(\phi_{cm} + \angle Y(j\omega)), \quad (3)$$

where

$$g_m = \sqrt{\frac{\beta}{(2I_O)}}, \quad (4)$$

being I_O the biasing current of the differential pair and

$$\beta = \frac{\mu C_{OX}}{2} \cdot \frac{W}{L}, \quad (5)$$

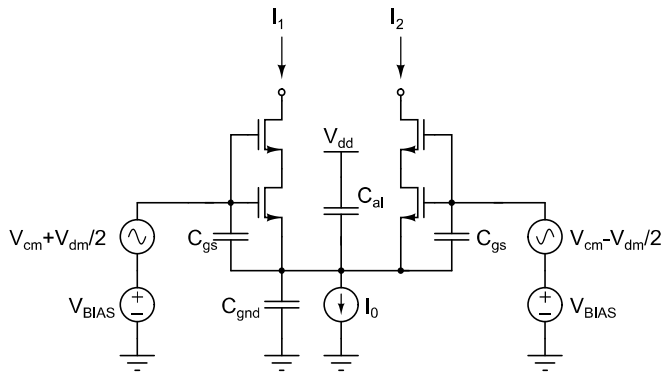

Fig. 3. A generic N type input differential pair.

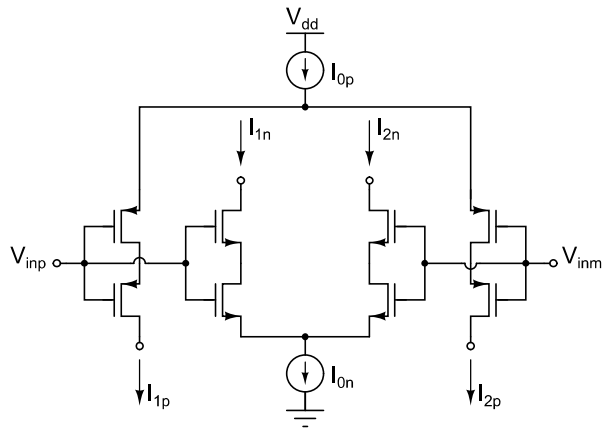

Fig. 4. A complementary differential input stage.

where V_{dm} and V_{cm} are the differential and common-mode components and ϕ_{cm} is the phase between them.

$$Y(j\omega) = \frac{2g_m j\omega C_T}{j\omega(C_T + 2C_{gs}) + 2g_m}, \quad (6)$$

where C_T is C_{al} + C_{gnd}. The overall voltage offset resulting from the input differential pair is, therefore, given by:

$$\Delta V_{off} = \frac{\Delta I_D}{g_m}. \quad (7)$$

An approach to remove the offset is therefore the addition of a complementary differential pair, as shown in Fig. 4 and suggested in [13]. Indeed ΔI_D is now given by ΔI_{DN} + ΔI_{DP} which is:

$$\Delta I_D = \frac{V_{dm} V_{cm}}{2} \cdot (F_n + F_p), \quad (8)$$

where F_n and F_p are equal in magnitude and of opposite sign:

$$\Delta F_n = g_{p,n} |Y_n(j\omega)| cos(\phi_{cm,n} + \angle Y(j\omega)), \quad (9)$$

$$\Delta F_p = g_{p,p} |Y_n(j\omega)| cos(\phi_{cm,p} + \angle Y(j\omega)), \quad (10)$$

where

$$\phi_{cm,p} = \phi_{cm,n} + \pi. \quad (11)$$

The complementary differential pair must be properly biased and the overall circuit should appear as symmetrical as possible in order to reduce the EMI susceptibility. The resulting amplifier schematic will be depicted in the following section.

Authorized licensed use limited to: Università degli Studi di Brescia. Downloaded on April 13,2025 at 15:08:46 UTC from IEEE Xplore. Restrictions apply.

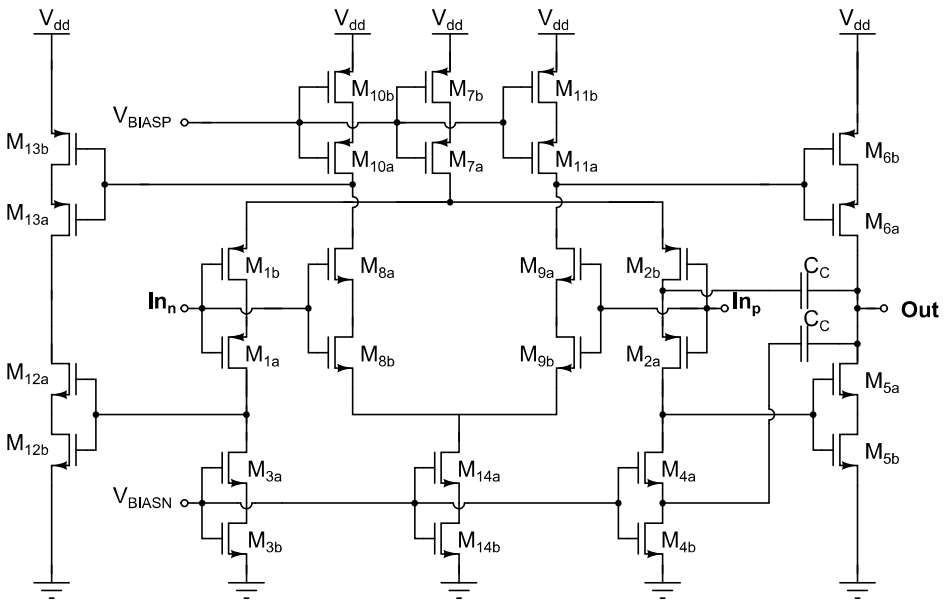

Fig. 5. The schematic of the complementary SC Miller amplifier with increased EMI immunity.

TABLE I. TRANSISTOR DIMENSIONS

SC transistors	$W_{finger}[\mu m]$	$L_{finger}[nm]$	n_{finger}
M_{1a}, M_{1b} M_{2a}, M_{2b}	W = 16, 18.75	L = 310, 520	20, 16
M_{3a}, M_{3b} M_{4a}, M_{4b}	W = 9.3, 9.3	L = 320, 640	4,4
M_{7a}, M_{7b}	W = 17, 17	L = 260, 520	18,18
M_{8a}, M_{8b} M_{9a}, M_{9b}	W = 12, 12	L = 320, 640	8,8
M_{10a}, M_{10b} M_{11a}, M_{11b}	W = 17.2, 17.2	L = 310, 520	10,10
M_{14a}, M_{14b}	W = 6, 6	L = 320, 640	10,10

TABLE II. MAIN AC CHARACTERISTICS OF BOTH SC MILLER AMPLIFIERS

	Original	Complementary
Gain [dB]	61	62
GBW [MHz]	150	220
Phase Margin [^{o}]	70	68
SR+/SR-[V/μs]	60/170	250/200
power cons. [mW]	1.6	2

IV. AN EMI-ROBUST SC AMPLIFIER

Based on the observations made in the previous paragraph, a SC Miller amplifier with increased immunity to EMI has been designed in the UMC 180nm CMOS technology: refer to Fig. 5. The complementary auxiliary differential pair reduces the current offset caused by the EMI in the input stage, while driving M_{6a} and M_{6b}, hereby compensating for the asymmetric slew rate. The optimal rejection of EMI is obtained when I_{on} is equal to I_{op} (refer to Fig. 4). The transistor dimensions using the UMC 180nm CMOS technology, are listed in Tab. I. The amplifier uses a voltage supply of 1.8V: the main AC characteristics of the proposed amplifier are listed in Tab. II and compared to the original SC amplifier.

V. MEASUREMENTS

A prototype chip including both the original and the complementary Miller SC amplifiers has been fabricated using the UMC CMOS 180nm technology (Fig. 6). The size of the original SC Miller amplifier is 190 μm x 120 μm, while the EMI-robust SC Miller amplifier is 210 μm x 180 μm. The test chip has been packaged in a QFN48 package.

For the conducted EMI measurements, both SC opamps were connected in the voltage follower configuration and, following the Direct Power Injection (DPI) measurement standard, an EMI source with an amplitude of 500mV was injected in the noninverting input superposed on an input common-mode voltage equal to Vdd/2 (0.9V) by means of a wideband bias tee [4], [5]. The offset induced by the interfering signal is plotted versus the EMI frequency in Fig.9. As can be observed, the proposed SC amplifier has a negligible offset at low-medium frequencies. Moreover, the measurements performed on both the SC Miller amplifiers confirm also the AC characteristics listed in Tab. II, with a slight deviation from the simulated values.

VI. CONCLUSIONS

This paper describes the design of an EMI-resilient complementary Miller operational amplifier designed with self-cascoded devices in the UMC 180nm CMOS process. Measurements confirm that the EMI-induced offset of this opamp is decreased by more than 50% with respect to the original Miller self-cascoded amplifier.

REFERENCES

[1] S. Ben Dhia, M. Ramdani and E. Sicard, *Electromagnetic Compatibility of Integrated Circuits,* Springer, 2006.

[2] J.-M. Redouté, M. Steyaert, *EMC of Analog Integrated Circuits,* Springer, 2010.

Authorized licensed use limited to: Università degli Studi di Brescia. Downloaded on April 13,2025 at 15:08:46 UTC from IEEE Xplore. Restrictions apply.

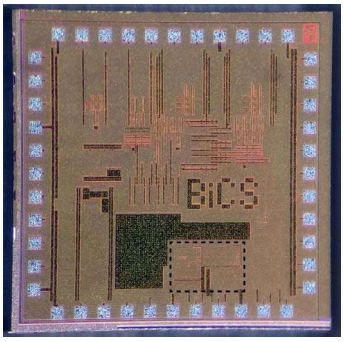

Fig. 6. Microphotograph of the prototype chip (UMS 180nm CMOS): the regular SC Miller and the complementary SC Miller opamps are located in the dashed box.

[3] A. S. Poulton, "Effect of conducted EMI on the DC performances of operational amplifiers", *Electronics Letters,* Vol. 30, pp.282-284, 1994.

[4] G. Masetti, S. Graffi, D. Golzio and Zs. M. Kovács-Vajna, "Failures Induced on Analog Integrated Circuits from Conveyed Electromagnetic Interferences: a Review", *Microelectronics and Reliability,* vol. 36, no. 7/8, pp. 995-972,1996.

[5] G. Setti and N. Speciale, "Design of a Low EMI Susceptibility CMOS Operational Amplifier", *Microelectronics and Reliability,* vol. 38, pp. 1143, 1998.

[6] N. Raj, A.K. Singh, A.K. Gupta, "Low-voltage bulk-driven self-biased cascode current mirror with bandwidth enhancement", *IET Electronics Letters,* vol. 50, no. 1, pp. 23-25, 2014.

[7] K.-J. Baek, J.-M. Gim, H.-S. Kim, K.-Y. Na, N.-S. Kim, Y.-S. Kim, "Analogue circuit design methodology using self-cascode structures", *IET Electronics Letters,* vol. 49, no. 9, pp. 591-592, 2008.

[8] M.Taherzadeh-Sani, A.A.Hamoui, "A1-VProcess-InsensitiveCurrent-Scalable Two-Stage Opamp With Enhanced DC Gain and Settling Behavior in 65-nm Digital CMOS", *IEEE JSSC*, vol. 46, no. 3, pp. 660-668, 2011.

[9] A. Richelli, J.-M. Redouté, "A Methodological Approach to EMI Resistant Analog Integrated Circuit Design", *IEEE EMC Magazine*, Vol. 4, No. 2, pp. 92-100, 2015.

[10] J.-M. Redouté and M. Steyaert, "EMI Resistant CMOS Differential Input Stages", *IEEE Transactions on Circuits and Systems I*, vol. 57, no. 2, pp. 323-331, 2010.

[11] F. Fiori, "Design of an Operational Amplifier Input Stage Immune to EMI," *IEEE Transactions on Electromagnetic Compatibility*, vol. 49, no. 4, Nov. 2007.

[12] C. Zuccarotto, A. Richelli, Zs. M. Kovács-Vajna, "Design of a Low Voltage High Symmetrical Slew Rate Opamp Based on Self Cascode in UMC 0.18μm", *Journal of Low Power Electronics*, vol. 11, no. 4, pp. 498-503, 2015.

[13] F. Fiori, P.S. Crovetti, "Complementary differential pair with high immunity to RFI", *IET Electronics Letters*, vol. 38, no. 25, pp. 1663-1664, 2003.

[14] C. Widemann, S. Stegemann, W. John, and W. Mathis, "Analytic investigations on the susceptbility of nonlinear analog circuits to substrate noise", *Advances in Radio Science*, vol. 11, pp. 171-175, 2013.

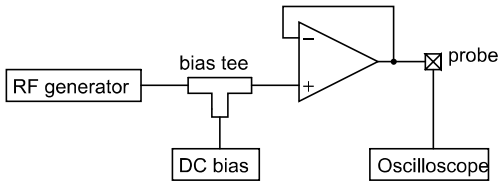

Fig. 7. DPI measurement setup.

Fig. 8. PCB used to perform the DPI measurements.

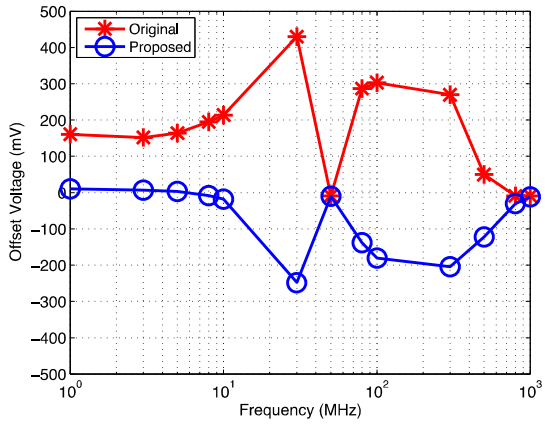

Fig. 9. Measurements of EMI induced offset as a function of EMI frequency. The EMI amplitude is 0.5V (Vdd = 1.8V; the input common-mode bias voltage equals 0.9V).

Authorized licensed use limited to: Università degli Studi di Brescia. Downloaded on April 13,2025 at 15:08:46 UTC from IEEE Xplore. Restrictions apply.