This article has been accepted for inclusion in a future issue of this journal. Content is final as presented, with the exception of pagination.

Susceptibility of Operational Amplifiers to Conducted EMI Injected Through the Ground Plane into Their Output Terminal

Anna Richelli, *Member, IEEE*, Giovanni Delaini, Marco Grassi, and Jean-Michel Redouté, *Senior Member, IEEE*

***Abstract*—In practical printed circuit board (PCB) designs, electromagnetic interference (EMI) is coupled from the ground plane, which is commonly shared among the analog, digital, and mixed-signal integrated circuits. This noisy ground plane couples interference capacitively to all the IC pins, including the output: this effect is exacerbated when the IC is connected to long wires and traces that are routed close to the conductive ground plane. This paper reports on the effect of interference, which is coupled capacitively from the PCB ground plane into all the IC pins of an opamp connected as a voltage buffer. Simulations illustrate the susceptibilities in custom operational amplifier designs, and are corroborated by measurements on several commercial devices. These measurements show that the EMI-induced offset can attain considerable values for the most critical EMI frequencies, which lie between 10 and 100 MHz. Moreover, these illustrate that there is a considerable susceptibility of operational amplifiers to electromagnetic interference coupled to their output pins.**

***Index Terms*—CMOS, immunity to electromagnetic interference (EMI), integrated circuits (ICs), operational amplifiers.**

Nomenclature

EMI	Electromagnetic interference.
PCB	Printed circuit board.
IC	Integrated circuit.
Opamp	Operational amplifier.
*V*out	Output voltage.
Vp	Peak voltage.
GBW	Gain bandwidth product.
SR	Slew rate.
UMC	United microelectronic corporation.
FC	Folded cascode.

I. Introduction

THE performance and reliability of CMOS integrated circuits are severely affected by electromagnetic interference (EMI). The continuous technological advance spawns the proliferation of electronic devices: these radiate unwanted electromagnetic emission, which results in a severely polluted electromagnetic environment dependent on a variety of interrelated factors. For instance, radio frequency (RF) signals are captured by sensors and received by the cabling of a system, conducting EMI to sensitive signal-conditioning circuits. This, in turn, causes errors and perturbs the operation of the entire electronic system [1], [2]. While modern ICs (integrated circuits) operate at lower supply and bias voltages, the variety of environmental RF interfering signals is steadily growing, leading to failures of the ICs exposed to EMI [3], [4].

The penalty of not achieving adequate immunity to EMI occurring in a real-life environment varies from high levels of warranty costs (for the manufacturer) to increased downtime levels (for the user). Undervaluing the importance of immunity to EMI is a costly process and has even led to the demise of some companies [5]. In [6], a relevant study on the correlation between reliable EMC design and highly competitive electronic industries in the Indian context is reported.

The problem of the interferences is mostly felt where the reliable operation of electronic circuits (and software/firmware) must be the highest, for example, in high-reliability, mission-critical, safety-critical, and security applications: for example, EMI has long been recognized, especially by the military, as a cause of unreliability in electronic equipment. In space systems [7], [8], an EMC programme must be properly integrated into the overall design and development effort of the system. In order to accomplish programmed missions, modern launch vehicles and spacecraft carry complex and sophisticated electronic circuits. A typical architecture consists of numerous subsystems such as telemetry, tracking, command, power, navigation, guidance, and control with their associated interconnecting wires and antennas. Because of high density packaging and low form-factor requirements, individual units are placed close to each other. Cables carrying power, control, and information signals run close to each other and antennas sharing a common ground plane are mounted. These factors give rise to interference problems that may result in delays or even total mission failure. Hence, it is essential that interference problems are controlled from the earliest stage in the life cycle of the system. Real-time computers are often used in embedded and life-critical applications where high reliability is important, but they also are subjected to EMI caused by the operating environment [9]. In [10], the reliability of a real-time embedded system subjected to conducted and radiated EMIs has been analyzed.

The assessment of IC immunity to EMI is nowadays compulsory not only for the qualification of the military [8], avionic,

Manuscript received July 29, 2015; revised November 3, 2015, January 18, 2016, and February 23, 2016; accepted April 10, 2016. Associate Editor: W.-C. Chien.

A. Richelli, G. Delaini, and M. Grassi are with the Department of Information Engineering, University of Brescia, 25121 Brescia, Italy (e-mail: anna.richelli@ing.unibs.it; g.delaini@studenti.unibs.it; grassi.marco@outlook.it).

J.-M. Redouté is with the Department of Electrical and Computer Systems Engineering, Monash University, Clayton, VIC 3800, Australia (e-mail: jean-michel.redoute@monash.edu).

Color versions of one or more of the figures in this paper are available online at http://ieeexplore.ieee.org.

Digital Object Identifier 10.1109/TR.2016.2570560

0018-9529 © 2016 IEEE. Personal use is permitted, but republication/redistribution requires IEEE permission.
See http://www.ieee.org/publications_standards/publications/rights/index.html for more information.

This article has been accepted for inclusion in a future issue of this journal. Content is final as presented, with the exception of pagination.

space [7], biomedical [11], and automotive markets [12], but also for less safety-critical applications, such as those related to household appliances, lighting, and telecommunications. Moreover, the increased severity of terroristic alerts in the last years raises serious preoccupations on the vulnerability of electronic equipment to intentional EMI attacks [13]–[16]: nonetheless, sources capable of producing very high RF power over a wide frequency range are nowadays available and instructions to build home-made RF power sources can be easily found on the Internet.

Several studies are reported in the literature, describing the susceptibility of analog ICs [17], as these are more sensitive to EMI [18]–[21]. Most of these works focus on operational amplifiers because of their high sensitivity to EMI and their prevalence in electronic circuits and building blocks [20]–[27]. The works targeting opamp susceptibility to EMI signals inject the latter into the noninverting input pin when the opamp is connected as a voltage follower or into the power supply pins (Vdd and Vss) [28]–[29]. However, the case when interferences are injected in an opamp's output has not been investigated with a similar level of detail.

In practical PCB designs, interferences are often coupled from the ground plane of the PCB as the latter is commonly shared with the other analog, digital or mixed-signal circuits and ICs [30]. The noisy ground plane couples interference capacitively to all the IC pins, including the output: this effect is exacerbated when the opamp is connected to long wires and traces, which are routed close to the conductive ground plane. This is especially the case in integrated analog voltage buffers, driving signals over long PCB tracks. The former are used in many electronic circuits, like, for example, in sample and hold systems, analog–digital converters, transmission lines, video and audio applications, and in biomedical, sensor and automotive systems [31]–[35]. In all those applications, the issue of electromagnetic immunity is paramount.

This paper reports on the effect of interference that is coupled capacitively from the PCB ground plane into all the IC pins of an opamp connected as a voltage buffer. Section II provides a comprehensive analysis covering the susceptibility of voltage buffers to EMI, corroborating the derivations with simulations of two prototype designs using the CMOS 180-nm UMC process. Section III presents measurement results on several commercial voltage buffer circuits. A discussion is presented in Section IV and Section V concludes the paper.

II. Analysis of EMI Injected in the Terminals of CMOS Voltage Buffers Designed in the UMC 0.18-μm CMOS Process

Several works in literature show that amplifiers are susceptible to conducted interferences directly injected into the noninverting input pin and/or into the power supply lines, and that one of the most undesirable effects of interferences is the shift of the output dc mean value (offset) that may asymptotically force the amplifier into saturation. The results of measurements performed on CMOS "custom" amplifiers as well as on commercial ones are also reported in the literature [36]–[37]. Nevertheless

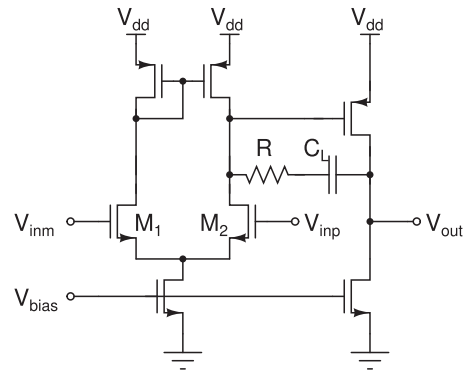

Fig. 1. Schematic of the Miller amplifier.

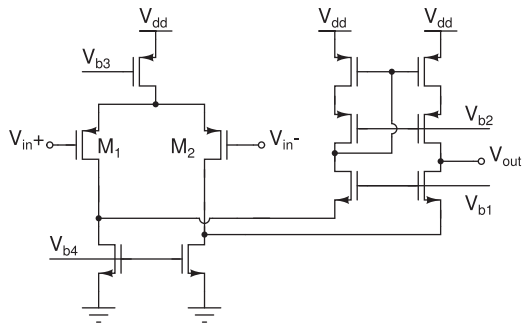

Fig. 2. Schematic of the folded cascode amplifier.

different scenarios of the electromagnetic pollution must be considered as well [30].

In [30], the design of a local interconnect network (LIN) integrated output driver circuit exhibiting a high degree of immunity against conducted EMI is presented: interestingly, the interferences affect the LIN driver through the output pin. The EMI signal is injected from the ground plane and coupled to the LIN bus through its bus capacitance. The case study described in [30] evokes a novel scenario regarding the effect of interferences on ICs: the unwanted RF signals may indeed be transmitted through the conductive ground plane, often shared with other analog, digital, or mixed ICs, and can be capacitively coupled to all the pins.

In present Section, the effect of interferences injected into an opamp's output pin is investigated in two voltage buffers designed in the CMOS 180-nm UMC technology. Two commonly used topologies have been considered: a Miller compensated two-stage amplifier and the folded cascode amplifier. These amplifiers are depicted in Figs. 1 and 2, respectively.

A. EMI Coupled to the Opamp Output

In the first instance, the interferences are capacitively coupled to the output pin of the opamp connected as a voltage follower by means of a capacitor, as shown in Fig. 3. The Miller amplifier has been designed for a nominal voltage supply of 3.3 V: at midsupply input bias, it exhibits a gain of 74 dB, a gain bandwidth product (GBW) of 44 MHz and a phase margin of 89º, obtained by means of an *RC* frequency compensation network ($R = 3$ k Ω and $C_L = 10$ pF). Referring to Fig. 1, the biasing voltage V_{bias} is obtained from an MOS divider and equals

This article has been accepted for inclusion in a future issue of this journal. Content is final as presented, with the exception of pagination.

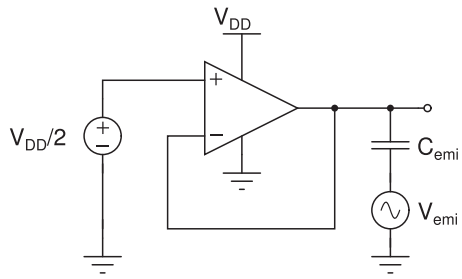

Fig. 3. Test setup: EMI injected in the output pin through 4.7 pF $C_{\rm emi}$: the opamp is connected as a voltage follower.

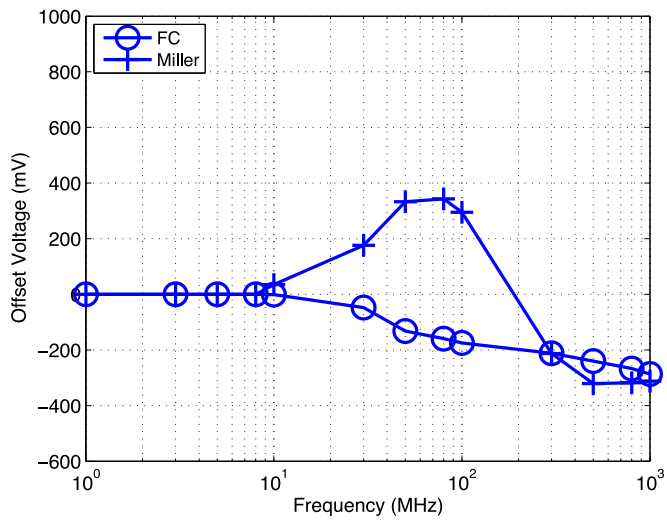

Fig. 4. EMI-induced offset of the folded cascode and Miller amplifiers. An EMI signal of 1.65 $V_{\rm pp}$ (peak to peak amplitude) is coupled in the output pin by means of capacitor $C_{\rm emi}$ equal to 4.7 pF.

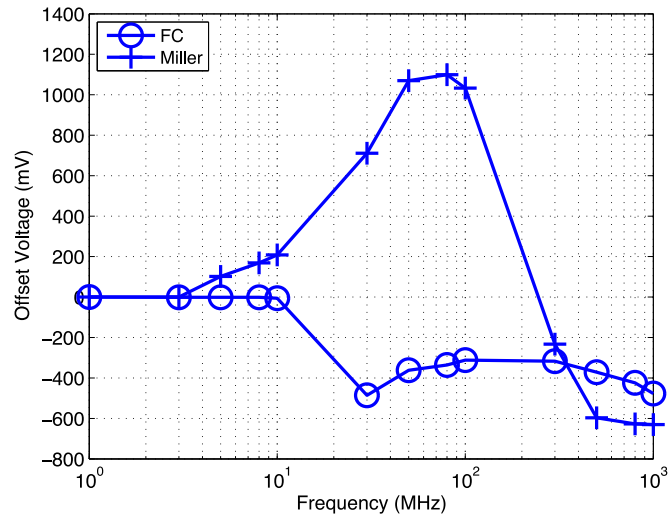

Fig. 5. EMI-induced offset of the folded cascode and Miller amplifiers. An EMI signal of 3.3 $V_{\rm pp}$ (peak to peak amplitude) is coupled in the output pin by means of capacitor $C_{\rm emi}$ equal to 4.7 pF.

TABLE I
AC SIMULATIONS

	A_v	GBW	PM	SR+	SR-
Miller $C_{\rm emi} = 4.7$ pF	74 dB	44 MHz	89°	20 V/μs	5.5 V/μs
Miller $C_{\rm emi} = 47$ pF	74 dB	8 MHz	52°	6 V/μs	1.5 V/μs
Folded cascode $C_{\rm emi} = 4.7$ pF	61 dB	51 MHz	78°	20 V/μs	15 V/μs
Folded cascode $C_{\rm emi} = 47$ pF	61 dB	5.3 MHz	89°	5 V/μs	3.5 V/μs

770 mV. The folded cascode amplifier has been designed for a nominal voltage supply of 3.3 V: at midsupply input bias, it exhibits a gain of 61 dB, a GBW of 51 MHz and a phase margin of 78°. Referring to Fig. 2, the biasing voltages are, respectively: $V_{b1} = 1.8$ V, $V_{b2} = V_{b3} = 2.4$ V, $V_{b4} = 0.9$ V. As shown in Fig. 3, the interferences are coupled to the output pin by means of capacitor $C_{\rm emi}$: for both amplifiers, its value is 4.7 pF. The latter forms a realistic value of the parasitic capacitance between a middle length trace and the PCB ground plane [38]–[40]. The Miller opamp achieves frequency compensation by C_L, while the folded cascode opamp achieves that by $C_{\rm emi}$.

In Figs. 4 and 5, the EMI-induced output voltage offsets of the Miller amplifier and the folded cascode opamp are shown, considering an EMI peak to peak amplitude of 1.65 and 3.3 V. Clearly, there is a high level of susceptibility to this type of interference. Both amplifiers, in particular the Miller opamp, exhibit a severe EMI-induced dc at the output node, especially at high to middle EMI frequencies: additionally, the EMI injected in the output through capacitor $C_{\rm emi}$ is fed back to the inverting input as well, which exacerbates the effect of EMI since the Miller opamp's input stage is very sensible to the RF noise as has been reported earlier [41], [42]. It is clear that the offset mainly depends on the EMI amplitude. On the other hand, the offset is affected by the capacitive coupling as well: this may be explained by the fact that the coupling capacitance $C_{\rm emi}$ reduces the GBW product of both amplifiers, resulting in an offset taking place at lower EMI frequencies. For the sake of clarity, the slew rate along with the main ac performances of both amplifiers is listed in Table I, considering a capacitive load of 4.7 and 47 pF. Not surprisingly, the increased coupling capacitance affects the GBW, the phase margin, and the slew rate. It is worth noting that in complex mixed signal ICs, the amplifiers can be connected to large capacitive loads (such as, several logic gates or voltage drivers). This impacts their immunity level as well as the frequency range at which they are susceptible to EMI, because varying capacitive loads affect the GBW, the PM, and the SR.

The difference between the Miller and the folded cascode amplifiers' EMI behavior at low to middle frequencies is related to the different architectures. The Miller amplifier is a two-stage opamp with a single-ended conversion at the first stage; the folded cascode is a one stage amplifier with a more symmetrical architecture that in general leads to more similar positive and negative slew rates. As has been reported earlier, the asymmetric slew rate plays a significant role in the susceptibility to the EMIs [43], [44].

B. EMI Coupled to the all Opamp Terminals

In the second instance, the interference was coupled to all the pins of the integrated amplifiers. The ground plane can cover the printed circuit board (PCB) all around the IC: therefore,

This article has been accepted for inclusion in a future issue of this journal. Content is final as presented, with the exception of pagination.

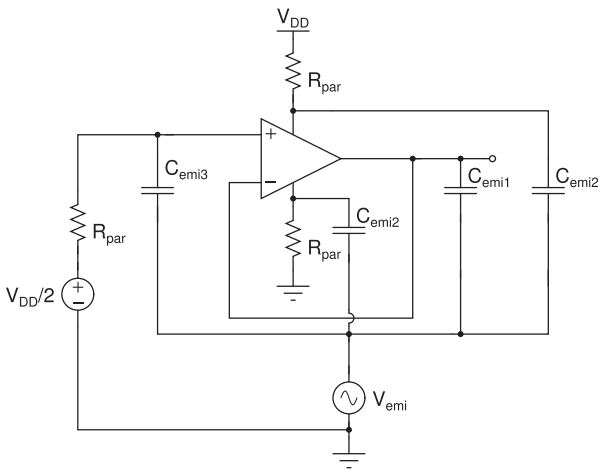

Fig. 6. Test setup: EMI injected in the opamp terminals through C_{emi1}, C_{emi2}, and C_{emi3}: the opamp is connected as a voltage follower.

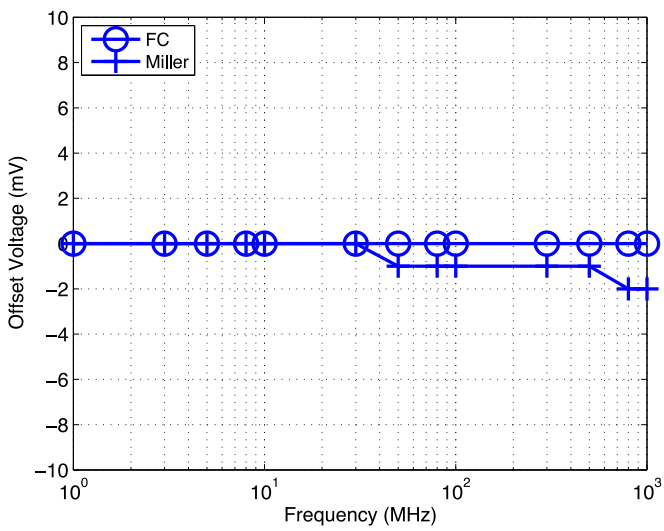

Fig. 7. EMI-induced offset of the folded cascode and Miller amplifiers. An EMI signal of 3.3 V_{pp} (peak to peak amplitude) is coupled to the V_{DD} pin by means of capacitor C_{emi2} equal to 4.7 pF; $R_{\mathrm{par}} = 50\ \Omega$.

the interfering signals can reach and interfere with all the IC pins simultaneously by means of the capacitive coupling to the ground plane. The simulation setup is shown in Fig. 6. First, the effect of EMI injected into the power supply pin (V_{DD}) through capacitor C_{emi2} has been investigated. To simulate the effect of the interferences coupled to the V_{DD} pin, a parasitic series resistance (R_{par}) must be added in the schematic: otherwise, there would not be any coupling between the EMI signal and the V_{DD} pin, because the voltage would be fixed by the ideal voltage source. In present simulations, two series resistance values were considered: 5 Ω and, as a worst case, 50 Ω. In the case of $R_{\mathrm{par}} = 5\ \Omega$, the offset caused by the EMI coupling into the V_{DD} pin is negligible, while in the worst case ($R_{\mathrm{par}} = 50\ \Omega$), the resulting EMI-induced offset is shown in Fig. 7.

Although the amplitude of the interfering signals was chosen to be 3.3 *V*pp (peak to peak voltage)—which is a very large value for this opamp as it is supplied by 3.3 V—and R_{par} equaling to 50 Ω can be assumed as the worst case, the offset is negligible.

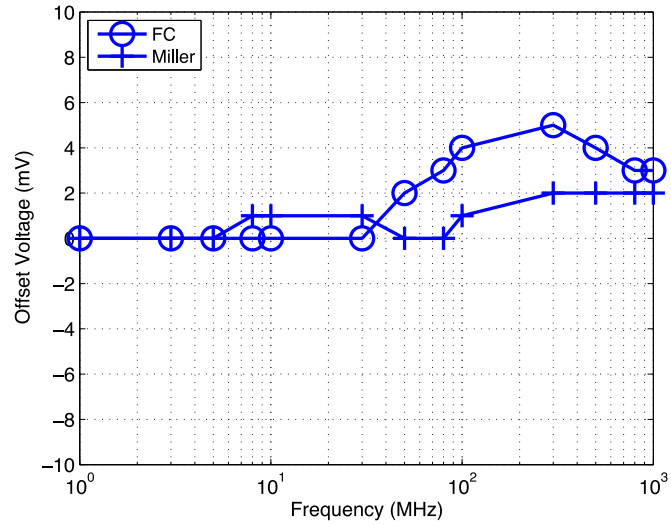

Fig. 8. EMI-induced offset of the folded cascode and Miller amplifiers. An EMI signal of 3.3 V_{pp} (peak to peak amplitude) is coupled to the negative power supply pin by means of capacitor C_{emi2} equal to 4.7 pF; $R_{\mathrm{par}} = 50\ \Omega$.

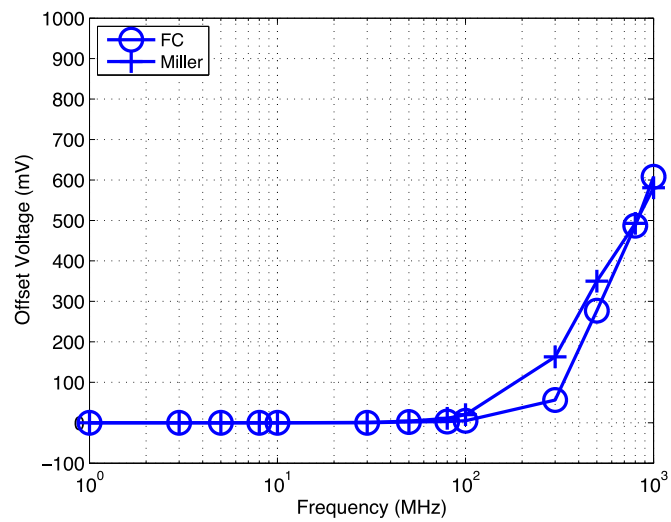

Fig. 9. EMI-induced offset of the folded cascode and Miller amplifiers. An EMI signal of 3.3 V_{pp} (peak to peak amplitude) is coupled to the noninverting input terminal by means of capacitor C_{emi3} equal to 4.7 pF; $R_{\mathrm{par}} = 50\ \Omega$.

A similar conclusion can be drawn for the interfering signals, which are coupled to the negative power supply terminal: for R_{par} being equal to 5 or 50 Ω, the resulting offset is negligible, as shown in Fig. 8. The noninverting pin of both amplifiers is biased at the midsupply voltage by means of a voltage source. Therefore, to consider EMI coupled to this pin, a series parasitic resistance R_{par} must be connected to this voltage generator, as clarified earlier. EMI coupled to the noninverting pin through C_{emi3} causes a negligible offset in case R_{par} has a low value: the maximum value is about 20 mV and the offset is zero for a wide frequency range (up to hundreds of megahertz). If a much larger value of R_{par} is considered, the offset at higher frequencies can be significant, as illustrated in Fig. 9.

It is interesting to consider the combined effect of the interferences coupled to all the pins as well. This depicts a plausible scenario, as the interfering signals reach and interfere with all

This article has been accepted for inclusion in a future issue of this journal. Content is final as presented, with the exception of pagination.

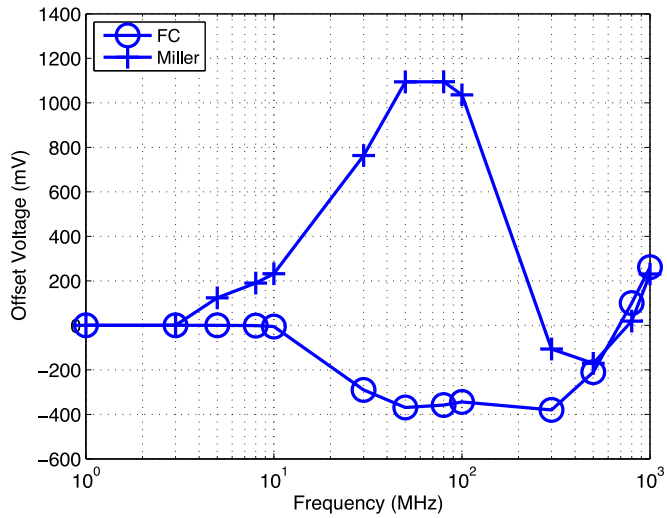

Fig. 10. EMI-induced offset of the folded cascode and Miller amplifiers. An EMI signal of 3.3 $V_{\rm pp}$ (peak to peak amplitude) is coupled to the power supply pins as well as the output pin by means of capacitors $C_{\rm emi1}$ and $C_{\rm emi2}$ equalling 4.7 pF; $R_{\rm par} = 50\ \Omega$.

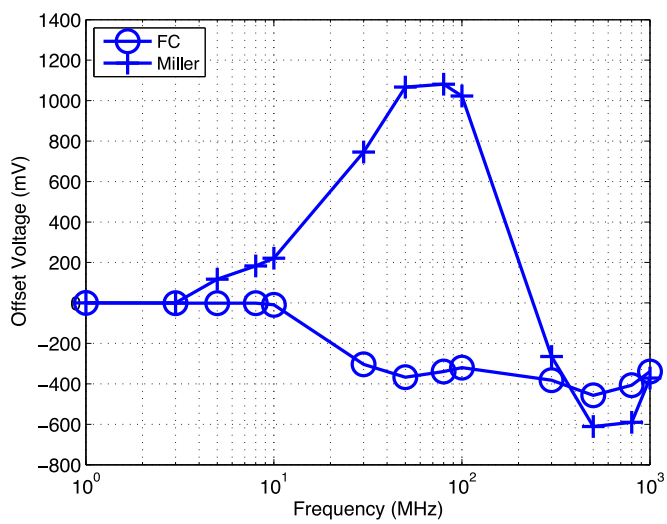

Fig. 11. EMI-induced offset of the folded cascode and Miller amplifiers. An EMI signal of 3.3 $V_{\rm pp}$ (peak to peak amplitude) is coupled to all the IC pins by means of capacitors $C_{\rm emi1}$, $C_{\rm emi2}$, and $C_{\rm emi3}$ equalling 4.7 pF; $R_{\rm par} = 50\ \Omega$.

the IC pins by means of the capacitive coupling to the ground plane. First, the combined effect of the EMI coupled to the output pin along with the interferences coupled to the negative and positive power supply pins has been considered. If the parasitic resistance of the voltage generator is low, as in the case of $R_{\rm par} = 5\ \Omega$, the effect is dominated by the interferences coupled to the output pin and the offset is identical to that of Figs. 4 and 5. Instead, if $R_{\rm par}$ is large, the corresponding EMI-induced offset is slightly different, as shown in Fig. 10 using an EMI amplitude of 3.3 $V_{\rm pp}$.

Finally, the combined effect of the interferences coupled to all the ICs pins (through $C_{\rm emi1}$, $C_{\rm emi2}$, and $C_{\rm emi3}$) are considered. Again, if $R_{\rm par}$ is low, the offset is the same of the interferences coupled only to the output pin. The case of $R_{\rm par} = 50\ \Omega$ and the corresponding EMI-induced offset is shown in Fig. 11.

To conclude this section, the CMOS Miller and folded cascode opamps that were integrated in the CMOS 180-nm UMC technology exhibit a high susceptibility not only to the interferences directly injected into the inputs or power supply pins as has been demonstrated in earlier works [45]–[47], but also when the interfering signals reach and interfere with all the IC pins by means of the capacitive coupling between the considered pins and the ground plane. The coupling at the power supply and input pins is weak (the voltage generators have a small internal resistance and we can consider $R_{\rm par} = 50\ \Omega$ as the worst case). Conversely, the coupling is very pronounced at the output pin which is a higher impedance node. The highest level of susceptibility appears when the EMI is capacitively coupled into the output pin, as the resulting EMI-induced offset is dominant. Moreover, it is worth adding that the offset is never straightforward to predict: this is mainly due to the strongly nonlinear behavior of the amplifiers subject to high frequency large signals. Nevertheless, some conclusions can be drawn. The EMI-induced offset increases with the amplitude of the interfering signal, as expected; in the folded cascode, the offset increases also with the frequency of the interferences while the Miller amplifier exhibits a different behavior (the offset reaches a positive maximum at tens of megahertz, then it decreases and it has a negative maximum at hundreds of megahertz). The folded cascode, which is a single-stage amplifier, has a more predictable susceptibility than the Miller amplifier, which is a two-stage amplifier.

The simulations presented in this section are used to identify and understand the influence of common opamp parameters and characteristics, such as the asymmetry in the slew rate, the GBW and the common-mode rejection ratio, on an opamp's susceptibility to EMI. This analysis is particularly relevant as datasheets commonly do not list these characteristics straightforwardly.

III. EMI Coupled in Commercial Amplifiers

A. Measurement Setup

In this section, a set of commercial operational amplifiers is subjected to EMI measurements in which EMI is coupled directly to the output, supply pins, and input pins. These measurements illustrate the susceptibility of the output terminals to EMI, as well as the compounded effect of EMI injected in several opamp terminals simultaneously. The obtained results will be qualitatively compared to the ones obtained in the previous section when evaluating the EMI performance of the custom designed opamps in the UMC 0.18-μm CMOS process. Fig. 12 depicts the measurement setup: the interfering signals are applied by means of capacitive coupling to the output pin as well as to both positive and negative power supply pins and to the noninverting input pin. In order to find the most critical EMI path, the interfering signals coupled to the different IC pins are considered separately. The capacitive coupling is reproduced by means of 0603 SMD capacitors and the measurements are repeated by using different amplitudes of the interfering signals as will be described further. These capacitors were soldered and desoldered according to the measurement setup requirements. A picture of the PCB for testing the uA741 opamp is shown

This article has been accepted for inclusion in a future issue of this journal. Content is final as presented, with the exception of pagination.

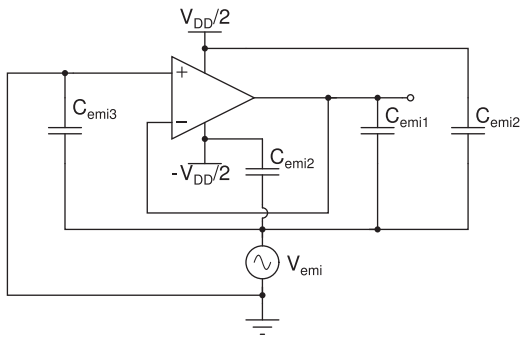

Fig. 12. Test setup: EMI injected in the inverting input, output and both power supply pins through C_{emi3}, C_{emi1}, and C_{emi2}, respectively.

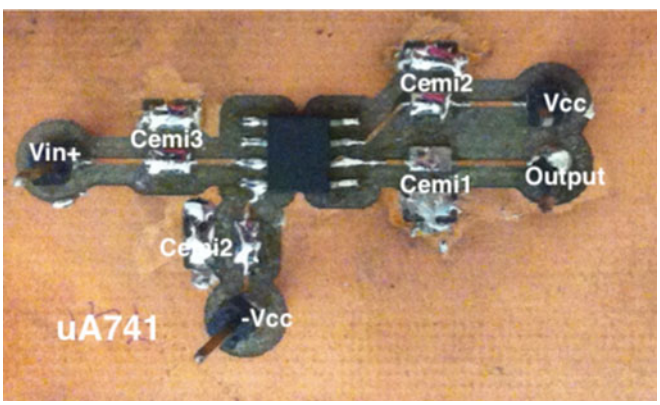

Fig. 13. Picture of the PCB for testing the uA741 opamp: EMI is injected in the output terminal (through C_{emi1}), in both power supply pins (through C_{emi2}) and in the noninverting input (through C_{emi3}).

in Fig. 13. A 33120-A Hewlett-Packard RF function generator has been used with a 50-Ω matching load to generate the EMI; the power supply and the biasing voltages were supplied by an E3630A Hewlett-Packard power supply. To have a fair comparison amongst a range of commercial amplifiers, two bipolar (uA741 and NE5534) and two CMOS (OPA705 and ICL7611) opamps have been chosen, with similar characteristics in terms of voltage supply and GBW.

B. EMI Measurements of the UA741

The first considered amplifier is the uA741 bipolar general-purpose operational amplifier. The high common-mode input voltage range makes the amplifier ideal for voltage-follower applications. The device is short-circuit protected and the internal frequency compensation ensures stability without external components [48]. The datasheet depicts the positive and negative step response, thus highlighting a significant asymmetry of the slew rate (the positive slew rate is considerable larger than the negative one), as shown in Fig. 14.

In present measurements, the amplifier is supplied by means of a dual voltage generator of +/−6 V. The amplifier is connected as a voltage buffer and an EMI signal is coupled to the amplifier pins by means of 4.7-pF SMD capacitors, as depicted in Fig. 12. At first, EMI signals coupled solely to the output pin of the amplifier are considered (C_{emi1}). In Fig. 15, the offset of the

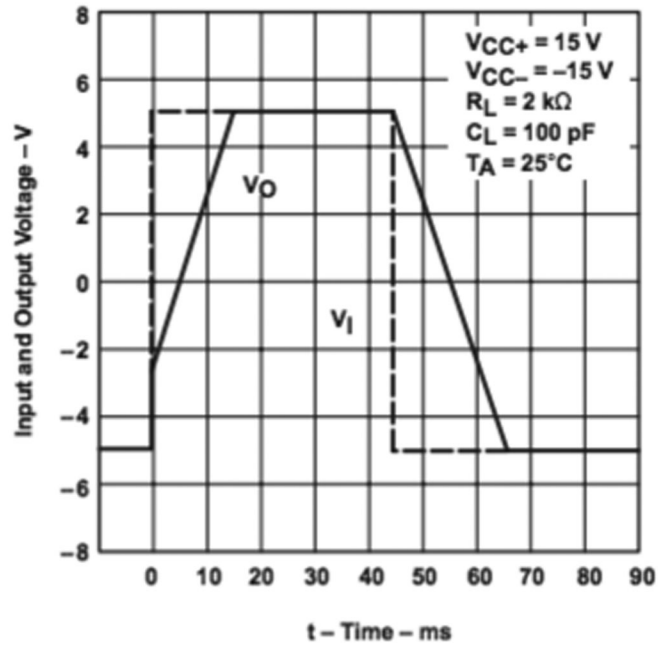

Fig. 14. Screenshot of the uA741 datasheet, showing the large signal step response.

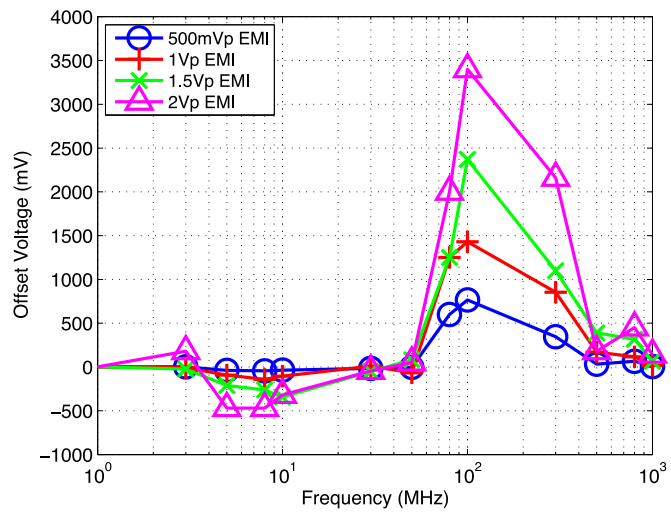

Fig. 15. uA741: EMI signal coupled to the output pin by means of $C_{\mathrm{emi1}} =$ 4.7 pF.

amplifier is plotted versus the EMI frequency, ranging from 1 MHz to 1 GHz, and considering different EMI amplitudes. The amplifier shows a high EMI susceptibility especially in the range of 50–500 MHz. At higher EMI frequencies, the PCB traces along with the IC package filter the EMI resulting in a negligible offset, as has been observed in previous works [45]. In the next measurement, the interferences are now coupled to the supply lines. Fig. 16 reports the measured EMI-induced offset in this case, considering three capacitors (C_{emi1} and both C_{emi2}s) as shown in Fig. 12. This figure shows that the behavior of the voltage buffer does not significantly change from the previous case when EMI was solely coupled to the output pin: the main observed effect lies in the wider range of critical frequencies (starting around 10 MHz) and reduced offset level. In the final

This article has been accepted for inclusion in a future issue of this journal. Content is final as presented, with the exception of pagination.

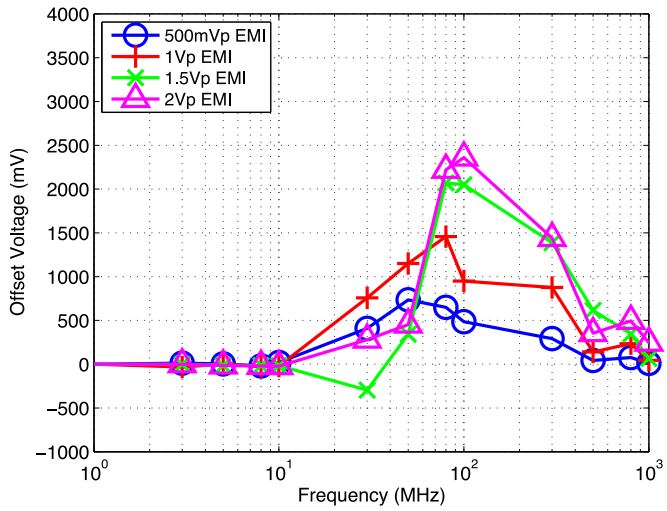

Fig. 16. uA741: EMI signal coupled to the output pin, and to the power supply pins, by means of $C_{\mathrm{emi1}} = C_{\mathrm{emi2}} = 4.7$ pF.

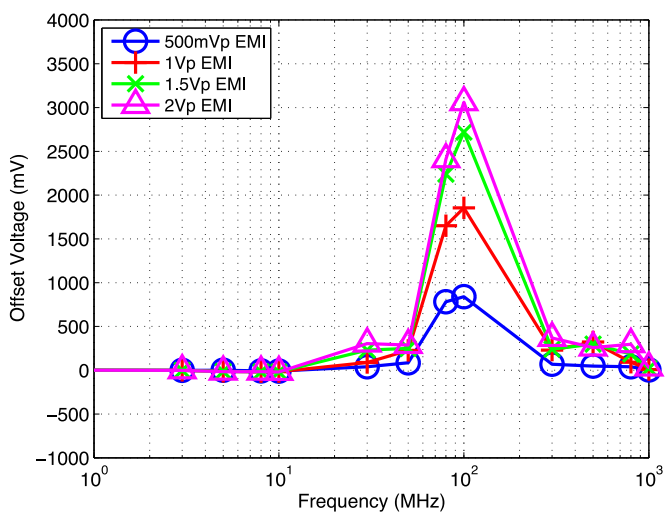

Fig. 17. uA741: EMI signal coupled to the output pin, to the power supply pins, and to the noninverting input pin, by means of $C_{\mathrm{emi1}} = C_{\mathrm{emi2}} = C_{\mathrm{emi3}} = 4.7$ pF.

measurement, C_{emi3} is added to setup: the EMI signal is now capacitively coupled to all the IC pins, as shown in Fig. 12. The offset measured in this experiment is plotted in Fig. 17.

It should be observed that at low EMI amplitudes (0.5 and 1 V), the worst offset is generated when EMI is injected in all the opamp pins simultaneously; conversely, for higher EMI amplitudes (1.5 and 2 V), the largest offset is obtained when EMI is coupled solely to the output pin. This can be explained by considering that for larger amplitude EMI signals, the opamp is radically driven out of its operating region when EMI is injected in the output pin: however, by injecting the identical EMI in the power supply rails as well as in the input, the supply voltages track the injected EMI, which results in the opamp maintaining its linear operating region for a longer time. In other words, this keeps the output EMI signal symmetrical with respect to the power supply rails, which results in a reduced distortion.

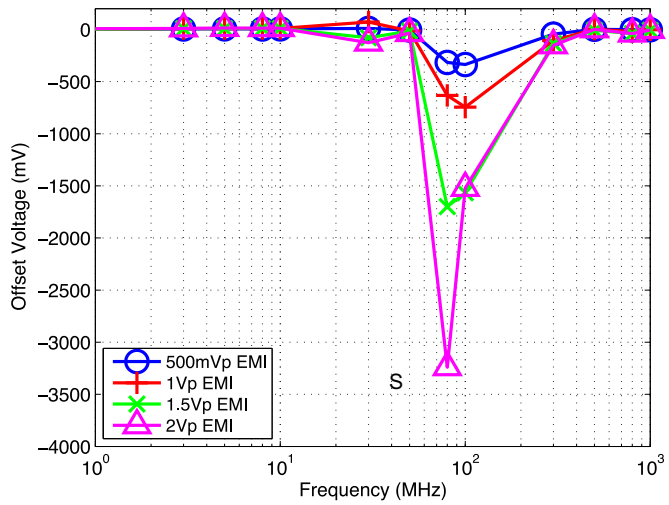

Fig. 18. OPA705: EMI signal coupled to the output pin by means of $C_{\mathrm{emi1}} = 4.7$ pF.

C. EMI Measurements of the OPA705

The OPA705 is a CMOS opamp optimized for applications requiring rail-to-rail input and output swing, for instance as required in automotive applications. It is widely used in audio, sensor applications, security systems, portable equipment, active filters, transducer amplifiers, test appliances, and data acquisition systems. Moreover, the rail-to-rail input and output swing make the OPA705 ideally suited to be used as a voltage buffer [49].

In present experiment, the amplifier is supplied by means of a dual voltage generator of +/−4 V. The amplifier is connected as a voltage buffer and an RF signal is coupled to the amplifier pins by means of capacitors, as shown in Fig. 12. First, the case of an EMI signal coupled only to the output pin of the amplifier is considered. In Fig. 18, the offset of the amplifier is plotted versus the frequencies, ranging from 100 kHz to 1 GHz, and considering different EMI amplitudes; C_{emi1} is equal to 4.7 pF. The amplifier clearly shows a high EMI susceptibility especially in the frequency range spanning 50–500 MHz, where a considerable negative offset is measured. This is likely due to the asymmetrical large signal response caused by the asymmetry between the positive and negative slew rate: unfortunately, while the datasheet provided the medium value of the slew rate (SR), it does not provide the value of the positive and negative SR. At higher frequencies, the PCB traces along with the IC package act as a filter, as discussed here previously. In the second measurement, the interference is coupled to the supply lines by means of two additional coupling capacitors (C_{emi2}): Fig. 19 shows the measured output offset voltage. The plot clearly shows that the behavior of the voltage buffer does not significantly change from the case where EMI is coupled only to the output pin: the main effect of the noisy power lines is in the slightly wider range of critical frequencies, which starts at around 10 MHz, and in an attenuation of the maximum offset in case of very large EMI amplitude, as in the case of uA741. Finally, the EMI signal is capacitively coupled to all the possible IC pins. The resulting EMI-induced offset is plotted in Fig. 20.

This article has been accepted for inclusion in a future issue of this journal. Content is final as presented, with the exception of pagination.

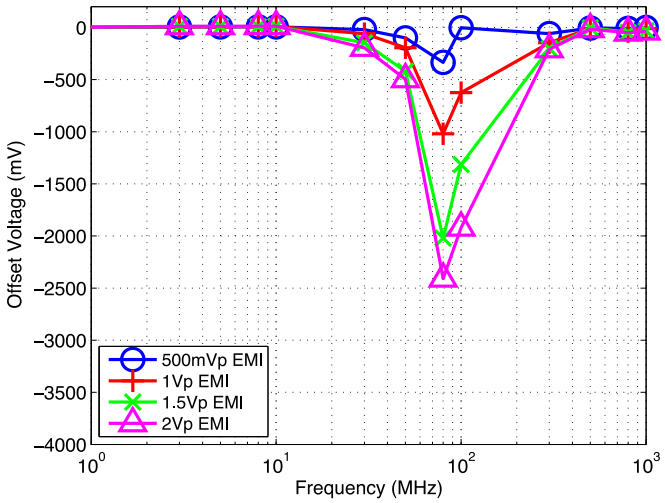

Fig. 19. OPA705: EMI signal coupled to the output pin, and to the power supply pins, by means of $C_{\mathrm{emi1}} = C_{\mathrm{emi2}} = 4.7$ pF.

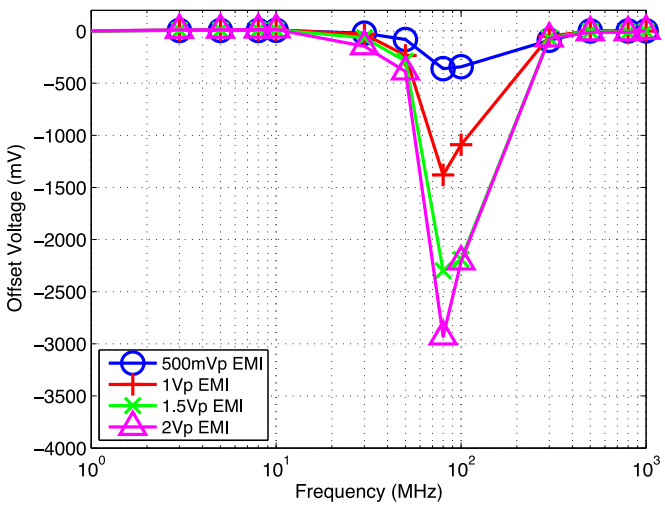

Fig. 20. OPA705: EMI signal coupled to the output pin, to the power supply pins, and to the noninverting input pin, by means of $C_{\mathrm{emi1}} = C_{\mathrm{emi2}} = C_{\mathrm{emi3}} = 4.7$ pF.

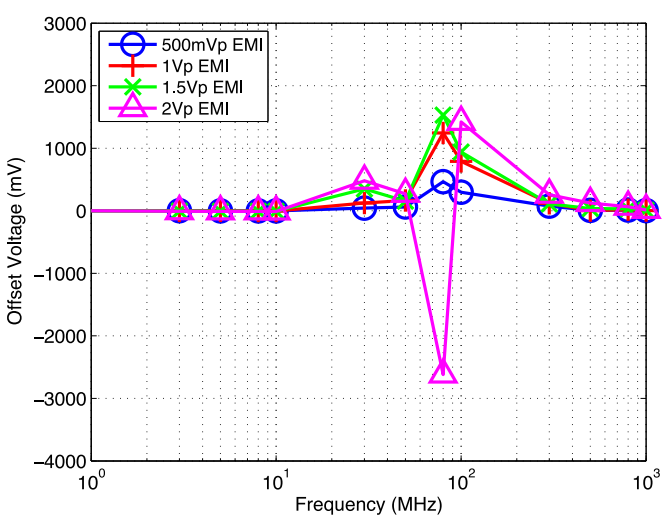

Fig. 21. ICL7611: EMI signal coupled to the output pin by means of $C_{\mathrm{emi1}} = 4.7$ pF.

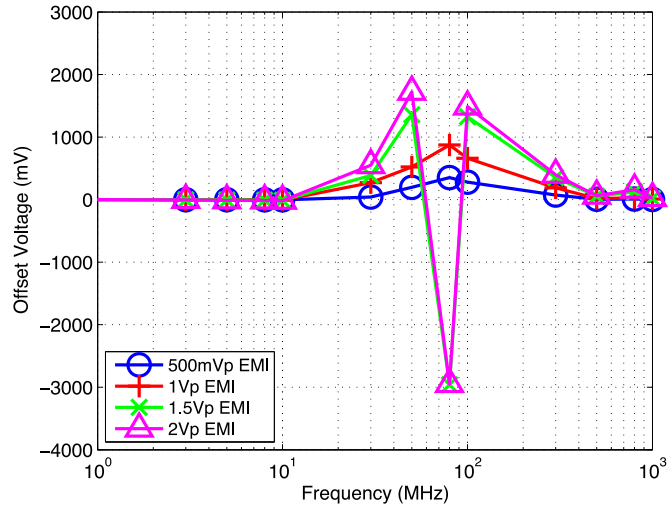

Fig. 22. ICL7611: EMI signal coupled to the output pin, and to the power supply pins, by means of $C_{\mathrm{emi1}} = C_{\mathrm{emi2}} = 4.7$ pF.

As in the case of uA741, the plot shows that the OPA705 does not significantly change its EMI behavior: it is very similar in all three experiments.

D. EMI Measurements of the ICL7611

The ICL761X series is a family of CMOS operational amplifiers. These devices provide the designer with high performance operation at low supply voltages and are an ideal design tool when ultralow input current and low power dissipation are desired. The ICL7611 operates at supply voltages ranging from 2 to 16 V, and may be operated from a single Lithium cell. The output swing ranges to within a few millivolts of the supply voltages. All these features optimize performance in very high source impedance applications. The inputs are internally protected. Outputs are fully protected against short circuits to ground or to either supply. The ICL7611 amplifier is widely used in portable instruments, telephone headsets, hearing aid/microphone amplifiers, meter amplifiers, medical instruments, and high impedance buffers [50].

Interestingly, the datasheet shows also the positive and negative step response, thus highlighting an asymmetry of the slew rate (the positive slew rate is larger than the negative one). In present experiment, the amplifier is supplied by means of a dual voltage generator of +/−3V. The amplifier is connected as a voltage buffer and an EMI signal is coupled to the amplifier pins by means of capacitors. First, the EMI signals are coupled only to the output pin of the amplifier (through C_{emi1}). In Fig. 21, the offset of the amplifier versus the EMI frequency for different EMI amplitudes and with the coupling capacitor C_{emi1} equaling to 4.7 pF are plotted. The amplifier clearly shows a high EMI susceptibility in the range of 30–500 MHz, where a very large offset is measured. In the second experiment, the interferences are coupled to the supply lines as well as to the output (C_{emi1} and C_{emi2} in Fig. 12): the resulting offset is reported in Fig. 22. Finally, C_{emi3} couples EMI to the noninverting input pin: the interference is in this way capacitively coupled to all the possi-

This article has been accepted for inclusion in a future issue of this journal. Content is final as presented, with the exception of pagination.

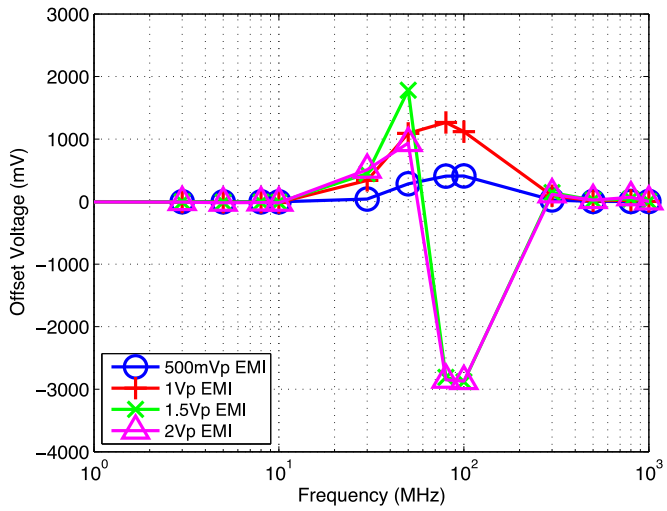

Fig. 23. ICL7611: EMI signal coupled to the output pin, to the power supply pins, and to the noninverting input pin, by means of $C_{\mathrm{emi1}} = C_{\mathrm{emi2}} = C_{\mathrm{emi3}} = 4.7$ pF.

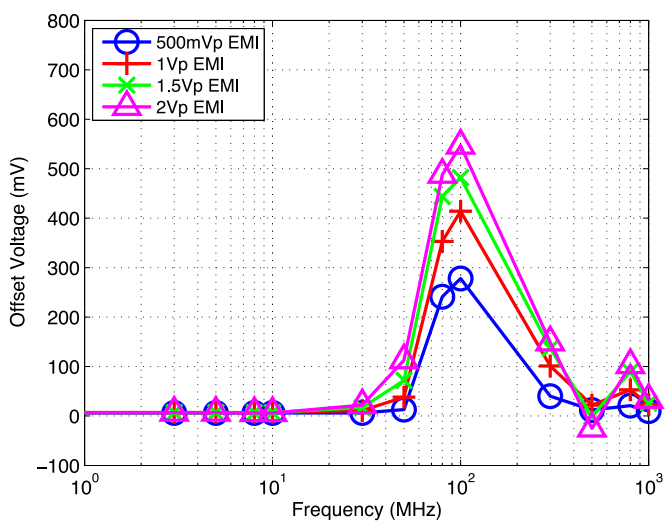

Fig. 24. NE5534: EMI signal coupled to the output pin by means of $C_{\mathrm{emi1}} = 4.7$ pF.

ble IC pins. The offset measured in this experiment is plotted in Fig. 23.

From the plots, the negative and positive peaks of the EMI-induced offset do not change by adding the coupling capacitors to the power supply rails, and noninverting input pins.

Explaining the effect of EMI cannot always be performed unequivocally, especially in the case of commercial amplifiers, because the underlying electronic schematics are not given in the datasheet. Moreover, while an amplifier is well characterized from a dc and ac point of view, the injected EMI is large as well as ranging from low to high frequencies, which forces the amplifier to operate in a strongly nonlinear region. In the case of ICL7611, the offset changes its polarity for very large interference most likely due to the debiasing of the active devices.

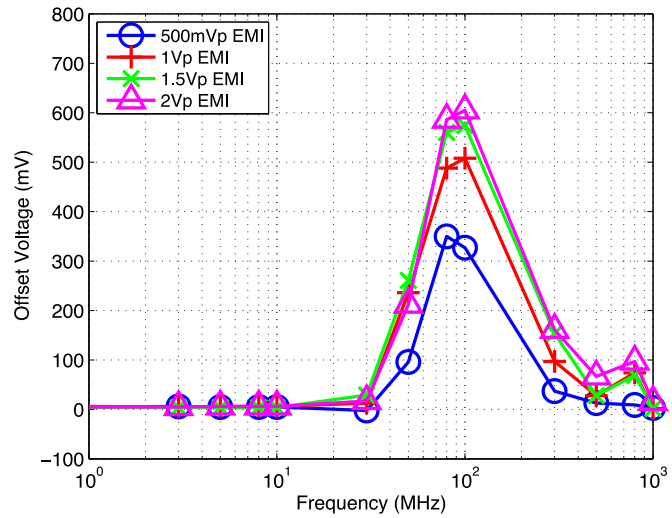

Fig. 25. NE5534: EMI signal coupled to the output pin, and to the power supply pins, by means of $C_{\mathrm{emi1}} = C_{\mathrm{emi2}} = 4.7$ pF.

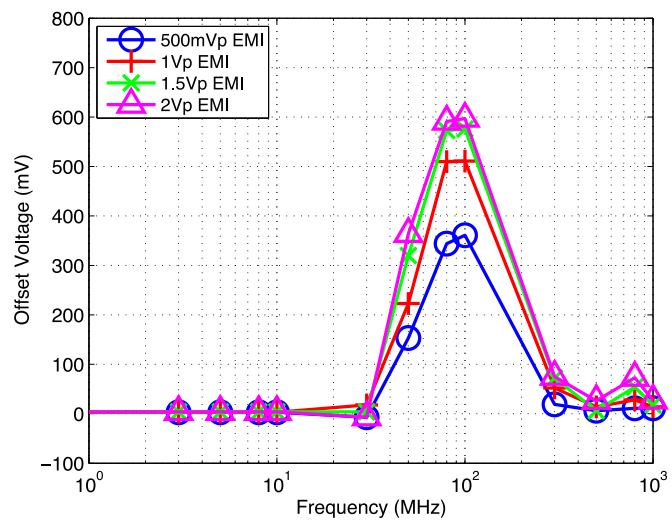

Fig. 26. NE5534: EMI signal coupled to the output pin, to the power supply pins, and to the noninverting input pin, by means of $C_{\mathrm{emi1}} = C_{\mathrm{emi2}} = C_{\mathrm{emi3}} = 4.7$ pF.

E. EMI Measurements of the NE5534

The NE5534 is a high-performance bipolar operational amplifier: some of the features include very low noise, high output drive capability, high unity-gain and maximum-output-swing bandwidths, low distortion, and high slew rate. The minimum voltage supply is 10 V and the maximum one is 30 V [51]. In present experiments, the amplifier is supplied by means of a dual voltage generator of +/−6 V.

First, the case of EMI signals coupled only to the output pin of the amplifier is considered. In Fig. 24, the offset of the amplifier versus the EMI frequency with the coupling capacitor C_{emi1} equaling to 4.7 pF are plotted. The amplifier clearly shows a high EMI susceptibility especially in the range of 50–500 MHz, where a large offset is measured. In the second experiment, the interferences are coupled to both supply lines through two coupling capacitors (C_{emi2}) in addition to the coupling to the

This article has been accepted for inclusion in a future issue of this journal. Content is final as presented, with the exception of pagination.

TABLE II
COMPARISON BETWEEN THE SUSCEPTIBILITY OF COMMERCIAL AMPLIFIERS TO CONDUCTED EMI INJECTED THROUGH THE GROUND PLANE

	uA741	OPA705	ICL7611	NE5534
Technology	Bipolar	CMOS	CMOS	Bipolar
V_{supply}	+6 V/−6 V	+4 V/−4 V	+3 V/−3 V	+6 V/−6 V
Volatge gain	97 dB	106 dB	83 dB	100 dB
GBW	1 MHz	1 MHz	1.4 MHz	10 MHz
Experiment 1: EMI = 2 *V*pp	Max. offset:	Max. offset:	Max. offset	Max. offset
$C_{\mathrm{emi1}} = 4.7$ pF	3400 mV @ 100 MHz	−3200 mV @ 80 MHz	−2500 mV @ 80 MHz	550 mV @ 100 MHz
	Critical freq.: 50–300 MHz	Critical freq.: 50–300 MHz	Critical freq.: 20–300 MHz	Critical freq.: 30–800 MHz
Experiment 2: EMI = 2 *V*pp	Max. offset	Max. offset	Max. offset	Max. offset
$C_{\mathrm{emi1}} = C_{\mathrm{emi2}} = 4.7$ pF	2400 mV @ 100 MHz	−2300 mV @ 80 MHz	−2900 mV @ 80 MHz	600 mV @ 100 MHz
	Critical freq. : 20 MHz–1 GHz	Critical freq. : 20–300 MHz	Critical freq. : 10–500 MHz	Critical freq.: 30 MHz–1GHz
Experiment 3: EMI = 2 *V*pp	Max. offset	Max. offset	Max. offset	Max. offset
$C_{\mathrm{emi1}} = C_{\mathrm{emi2}} = C_{\mathrm{emi3}} = 4.7$ pF	3000 mV T @ 100 MHz	−2800 mV @ 80 MHz	−2900 mV @ 80 MHz	600 mV @ 100 MHz
	Critical freq. : 20–300 MHz	Critical freq. : 20–300 MHz	Critical freq. : 10–300 MHz	Critical freq. : 30 MHz–1 GHz

output pin (C_{emi1}): the resulting output offset is reported in Fig. 25.

Finally, C_{emi3} is added between V_{emi} and the noninverting input pin: the EMI signals are in this way capacitively coupled to all the possible IC pins. The offset measured in this experiment is plotted in Fig. 26.

As can be observed, the NE5534 voltage buffer practically preserves the same behavior in all the three experiments. The EMI signals coupled to the output pin cause therefore the maximum induced offset and represent the worst case, compared to the EMI coupled to the power pins (considering both positive and negative) and to the noninverting input pin. This conclusion is confirmed by the previous opamp measurements but in this case it is really evident, as demonstrated by the plots.

IV. DISCUSSION

A comparison between the susceptibility of the commercial amplifiers under test to conducted EMI injected through the ground plane is listed in Table II. This table shows that all the amplifiers, independently on the technology (bipolar or CMOS) are susceptible to the interferences arising from the ground plane and capacitively coupled to the pins. Furthermore, the measurements show that the output pin is the most susceptible one. This highlights a problem of paramount importance, for instance, in the case of analog integrated buffers that drive signals over long PCB traces. By adding other injection paths (from the voltage supply and from the noninverting input pins), the range of critical frequencies is slightly enlarged, while the maximum offset remains practically the same: the maximum offset can even decrease under some circumstances, because the opamp's biasing remains in its linear region for a longer time. Moreover, all the amplifiers exhibit a large offset when the EMI signals are within a range of tens–hundreds of megahertz; at higher frequencies, the parasitic components associated to the IC package and the PCB act as a filter, reducing the EMI-induced offset. Finally, the EMI-induced offset is correlated to the asymmetry of slew rate, as already demonstrated in the literature in the case of direct injection in the noninverting input pin.

V. CONCLUSION

The performance and reliability of CMOS integrated circuits such as operational amplifiers are severely affected by EMI. In this paper, an improved measurement setting up for EMI pollution has been considered: the unwanted RF signals are injected through the copper ground plane, which is often shared with other analog, digital, or mixed ICs, and are capacitively coupled to all the pins of the amplifiers connected as a voltage buffer. Simulation and measurement results show a considerable susceptibility of operational amplifiers to EMI coupled to their output pin.

REFERENCES

[1] S. Mitra, N. R. Saxena, and E. J. McCluskey, "Common-mode failures in redundant VLSI systems: A survey," *IEEE Trans. Rel.*, vol. 49, no. 3, pp. 285–295, Sep. 2000.

[2] A. A. Iliadis and K. Kyechong, "Theoretical foundation for upsets in CMOS circuits due to high-power electromagnetic interference," *IEEE Trans. Device Mater. Rel.*, vol. 10, no. 3, pp. 347–352, Sep. 2010.

[3] C. R. Paul, *Introduction to Electromagnetic Compatibility*. New York, NY, USA: Wiley, 1992.

[4] A. S. Poulton, "Effect of conducted EMI on the DC performances of operational amplifiers," *Electron. Lett.*, vol. 30, pp. 282–284, 1994.

[5] K. Armstrong, "Why increasing immunity test levels is not sufficient for high-reliability and critical equipment," in *Proc. IEEE Int. Symp. Electromagn. Compat.*, 2009, pp. 30–35.

[6] G. K. Deb, "Achieving the enhanced reliability of electronic system by application of EMI control measures," in *Proc. IEEE Int. Symp. Electromagn. Compat.*, 1997, pp. 439–443.

[7] N. K. Agarwal, "EMI control in high reliability space system," in *Proc. IEEE Int. Symp. Electromagn. Compat.*, 1999, pp. 1–6.

[8] K. Singh, R. T. Keshwani, S. Das, and S. Bhattacharya, "Quenching the conducted emission hazards for heliborne time domain electromagnetic exploration system," in *Proc. Int. Conf. Rel., Saf. Hazard*, 2010, pp. 608–610.

[9] Seong Woo Kwak and Byung Kook Kim, "Task-scheduling strategies for reliable TMR controllers using task grouping and assignment," *IEEE Trans. Rel.*, vol. 49, no. 4, pp. 355–362, Dec. 2000.

[10] C. Oliveira, J. Benfica, L. M. Bolzani Poehls, F. Vargas, J. Lipovetzky, A. Lutenberg, E. Gatti, F. Hernandez, and A. Boyer, "Reliability analysis of an on-chip watchdog for embedded systems exposed to radiation and EMI," in *Proc. Int. Workshop Electromagn. Compat. Integr. Circuits*, 2013, pp. 89–94.

[11] M. A. Stuchly and R. Kavet, "Numerical modeling of pacemaker interference in the electric-utility environment," *IEEE Trans. Device Mater. Rel.*, vol. 5, no. 3, pp. 481–487, Sep. 2005.

[12] M. J. Pont, R. Kureemun, H. L. R. Ong, and W. Peasgood, "Increasing the reliability of embedded automotive applications in the presence of EMI: A pilot study," in *Proc. IEE Semin. Electromagn. Compat. Automot. Electron.*, 1999, pp. 1–4.

This article has been accepted for inclusion in a future issue of this journal. Content is final as presented, with the exception of pagination.

[13] S. Van De Beek and F. Leferink, "Robustness of a TETRA base station receiver against intentional EMI," *IEEE Trans. Electromagn. Compat.*, vol. 57, no. 3, pp. 461–469, Jun. 2015.

[14] J. F. Dawson, I. D. Flintoft, P. Kortoci, L. Dawson, A. C. Marvin, M. P. Robinson, M. Stojilovic, M. Rubinstein, B. Menssen, H. Garbe, W. Hirschi, and L. Rouiller, "A cost-efficient system for detecting an intentional electromagnetic interference (IEMI) attack," in *Proc. IEEE Int. Symp. Electromagn. Compat.*, 2014, pp. 1252–1256.

[15] *IEEE Draft Recommended Practice for Protecting Public Accessible Computer Systems from Intentional EMI, IEEE P1642/D10*, Oct. 2014, pp. 1–31, 2014.

[16] S. Van De Beek and F. Leferink, "Current intentional EMI studies in Europe with a focus on STRUCTURES," in *Proc. IEEE Int. Symp. Electromagn. Compat.*, Tokyo, Japan, pp. 402–405, 2014.

[17] G. Gielen, E. Maricau, and P. De Wit, "Design automation towards reliable analog integrated circuits," in *Proc. IEEE/ACM Int. Conf. Comput.-Aided Des.*, 2010, pp. 248–251.

[18] J. Wu, A. Boyer, J. Li, B. Vrignon, S. Ben Dhia, E. Sicard, and R. Shen, "Modeling and simulation of LDO voltage regulator susceptibility to conducted EMI," *IEEE Trans. Electromagn. Compat.*, vol. 56, no. 3, pp. 726–735, Jun. 2014.

[19] T. Dubois, J.-J. Laurin, J. Raoult, and S. Jarrix, "Effect of low and high power continuous wave electromagnetic interference on a microwave oscillator system: From VCO to PLL to QPSK receiver," *IEEE Trans. Electromagn. Compat.*, vol. 56, no. 2, pp. 286–293, Apr. 2014.

[20] T. Su, M. Unger, T. Steinecke, and R. Weigel, "Degradation of the conducted radio frequency immunity of microcontrollers due to electromagnetic resonances in foot-point loops," *IEEE Trans. Electromagn. Compat.*, vol. 54, no. 4, pp. 772–784, Aug. 2012.

[21] A. Pretelli, A. Richelli, l. Colalongo, and Zs. Kovacs, "Reduction of EMI susceptibility in CMOS bandgap reference circuits," *IEEE Trans. Electromagn. Compat.*, vol. 48, no. 4, pp. 760–765, Nov. 2006.

[22] A. Richelli, "Increasing EMI immunity in novel low-voltage CMOS OpAmps," *IEEE Trans. Electromagn. Compat.*, vol. 54, no. 4, pp. 947–950, Aug. 2012.

[23] F. Fiori, "Design of an operational amplifier input stage immune to EMI," *IEEE Trans. Electromagn. Compat.*, vol. 49, no. 4, pp. 834–839, Nov. 2007.

[24] J. M. Redoute and M. Steyaert "EMI resisting CMOS differential pair structure," *Electron. Lett.*, vol. 42, no. 21, pp. 84–85, Oct. 2006.

[25] C. Walravens, S. Van Winckel, J. M. Redoute, and M. Steyaert "Efficient reduction of electromagnetic interference effects in operational amplifiers," *Electron. Lett.*, vol. 43, no. 2, pp. 84–85, Jan. 2007.

[26] A. Richelli, "CMOS OpAmp resisting to large electromagnetic interferences," *IEEE Trans. Electromagn. Compat.*, vol. 52, no. 4, pp. 1062–1065, Nov. 2010.

[27] P. S. Crovetti "Operational amplifiers immune to EMI with no baseband performance degradation," *Electron. Lett.*, vol. 46, no. 3, pp. 209–210, Feb. 2010.

[28] D. Florean, F. Marchiori, M. Pinelli, and P. Tomasin, "Analysis of EMI effects in Op-Amp ICs: Measurement techniques and numerical prediction," in *Proc. IEEE Int. Symp. Electromagn. Compat.*, Vol. 2, 2001, pp. 1106–1110.

[29] Zs. M. Kovacs-Vajna, E. Sardini, and N. Speciale, "Chaotic behavior of 741 opamps subjected to EMI conveyed to power supply rails," in *Proc. IEEE Int. Symp. Circuits Syst.*, Vol. 1, 2000, pp. 727–730.

[30] J.-M. Redouté and M. Steyaert, "An EMI resisting LIN driver in 0.35-micron high-voltage CMOS," *IEEE J. Solid-State Circuits*, vol. 42, no. 7, pp. 1574–1582, Jul. 2007.

[31] A. Torralba, R. G. Carvajal, M. Jimenez, F. Munoz, and J. Ramirez-Angulo, "Compact low-voltage class-AB analogue buffer," *Electron. Lett.*, vol. 42, no. 3, pp. 152–154, 2006.

[32] C. Yoo, D.-J. Kim, and K.-L. Lee, "Threshold voltage and mobility mismatch compensated analogue buffer for driver-integrated poly-Si TFT LCDs," *Electron. Lett.*, vol. 41, no. 2, pp. 65–66, 2005.

[33] F. Centurelli, P. Monsurro, S. Pennisi, G. Scotti, and A. Trifiletti, "Design solutions for sample-and-hold circuits in CMOS nanometer technologies," *IEEE Trans. Circuits Syst. II, Exp. Brief*, vol. 56, no. 6, pp. 459–463, Jun. 2009.

[34] A. S. Weddell, G. V. Merrett, and B. M. Al-Hashimi, "Photovoltaic sample-and-hold circuit enabling MPPT indoors for low-power systems," *IEEE Trans. Circuits Syst. I, Reg. Papers*, vol. 59, no. 6, pp. 1196–1204, Jun. 2012.

[35] S. Hashemi and B. Razavi, "A 7.1 mW 1 GS/s ADC with 48 dB SNDR at Nyquist Rate," *IEEE J. Solid-State Circuits*, vol. 49, no. 8, pp. 1739–1750, Aug. 2014.

[36] Jin-Li Cheng, Yuan Liu, Jian-Bo Liu, Ai-Xiang Wei, Ting Zhang, Yunfei En, and Jia-Jun Lv, "Sensitive analysis of EMI effect in the A741 operational amplifier circuit," in *Proc. Int. Conf. Qual., Rel., Risk, Maint. Saf. Eng.*, pp. 1118–1121, Jul. 2013.

[37] N. Speciale and G. Setti, "Failures induced on bipolar operational amplifiers from electromagnetic interferences conducted on the power supply rails," in *Proc. IEEE 37th Annu. Int. Rel. Phys. Symp.*, 1999, pp. 333–336.

[38] J. B. Preibisch, X. Duan, and C. Schuster, "An efficient analysis of power/ground planes with inhomogeneous substrates using the contour integral method," *IEEE Trans. Electromagn. Compat.*, vol. 56, no. 4, pp. 980–989, Aug. 2014.

[39] M. Kachout, J. Bel Hadj Tahar, and F. Choubani, "Modeling of microstrip and PCB traces to enhance crosstalk reduction," in *Proc. IEEE SIBIRCON*, 2010 pp. 594–597.

[40] V. Ricchiuti, "Evaluation of the effective electrical parameters of a PCB trace for accurate signal integrity simulations," in *Proc. PIERS*, pp. 77–80, 2004.

[41] S. Boyapati, D. Das, M. Shojaei-Baghini, and J.-M. Redouté, "A balanced CMOS OpAmp with high EMI immunity," in *Proc. IEEE EMC Eur. Conf.*, Gothenburg, Sweden, Sep. 2014.

[42] A. Richelli and J.-M. Redouté, "A methodological approach to EMI resistant analog integrated circuit design," *IEEE Electromagn. Compat Mag.*, vol. 4, no. 2, pp. 92–100, 2nd Quarter 2015.

[43] A. Richelli, L. Colalongo, M. Quarantelli, and Zs. Kovacs "Robust design of low EMI susceptibility CMOS OpAmp," *IEEE Trans. Electromagn. Compat.*, Vol. 46, No. 2, pp. 291–298, May 2004.

[44] A. Richelli, L. Colalongo, and Zs. Kovacs "Increasing the immunity to electromagnetic interferences of CMOS operational amplifiers," *IEEE Trans. Rel.*, vol. 52, no. 3, pp. 349–353, Sep. 2003.

[45] A Richelli, G Matig-a, and J.-M. Redouté, "Design of a folded cascode opamp with increased immunity to conducted electromagnetic interference in 0.18 μm CMOS," *Microelectron. Rel.*, vol. 55, no. 3–4, pp. 654–661, 2015.

[46] J.-M. Redouté and A. Richelli, "A fundamental approach to EMI resistant folded cascode operational amplifier design," in *Proc. EMC Eur.*, vol. 1, 2013, pp. 203–208.

[47] A. Richelli and J.-M. Redouté, "Increasing the EMI immunity of CMOS operational amplifiers using an on-chip common-mode cancellation circuit," in *Proc. EMC Eur.*, Vol. 1, 2014, pp. 698–702.

[48] [Online]. Available: http://www.ti.com/lit/ds/symlink/ua741.pdf

[49] [Online]. Available: http://www.ti.com/lit/ds/symlink/opa705.pdf

[50] [Online]. Available: http://www.intersil.com/content/dam/Intersil/documents/icl7/icl7611-12.pdf

[51] [Online]. Available: http://www.ti.com/lit/ds/symlink/sa5534a.pdf

Anna Richelli (M'05) was born in Brescia, Italy, in 1974. She received the *Laurea* degree in electronic engineering from the University of Brescia, Brescia, Italy, in 2000.

She is currently an Assistant Professor at the Department of Information Engineering, University of Brescia. Her main research interests include design of dc/dc converters, ultralow voltage analog circuits, high EMI immunity ICs, and reliability issues.

Giovanni Delaini was born in Brescia, Italy, in 1980. He received the Bachelor's degree in electronic engineering from the University of Brescia, Brescia, Italy, in 2016.

His research interests include measurements and reliability issues in integrated circuits.

Marco Grassi was born in Brescia, Italy, in 1988. He received the *Laurea* degree in electronic engineering from the University of Brescia, Brescia, Italy, in 2015.

His research interests include design of high EMI immunity amplifiers and reliability issues in integrated circuits.

Jean-Michel Redouté (SM'12) received the M.S. degree in electronics from the University College of Antwerp, Antwerp, Belgium, in 1998, and the M.Eng. degree in electrical engineering from the University of Brussels, Brussels, Belgium, in 2001.

In September 2010, he joined Monash University, Melbourne, Australia, as a Senior Lecturer. His research interests include mixed-signal integrated circuit design, electromagnetic compatibility, biomedical (integrated and non-integrated) circuit design, and radio frequency-integrated circuit design.