The Effect of Source Resistance on The Linearity of Nauta Structure OTA

Long Pham[*], Astria Nur Irfansyah[*ǂ], Tara Julia Hamilton[£] and Torsten Lehmann[*]
[*]School of Electrical Engineering and Telecommunications
The University of New South Wales, Australia
[ǂ]Institut Teknologi Sepuluh Nopember, Indonesia
[£]MARCS Institute, Western Sydney University, Penrith, Australia

***Abstract*—In conventional design of Nauta transconductor, the limitation of output voltage swing is usually the price for very high DC-gain due to inevitable non-linear effects in the transconductor. Nevertheless, a new design of Nauta transconductor in sub-micron CMOS technology with digitally-controlled transconductance may bring along opportunities to adjust the intrinsic gain of Nauta transconductor which, in turn, provides us freedom to concentrate on the linearity enhancement of the transconductor itself. This can be done thanks to the effect of source resistance to the distortion in CMOS transistor circuits. In this paper, we propose a method to calibrate the resistance in the source terminal of self-coupled inverters so that it improves the linearity as well as the output voltage swing of a Nauta structure op-amp designed in 65nm process without the sacrifice of its intrinsic gain.**

***Keywords*—Nauta transconductor; complementary CS stage; source resistance; linearization; CMOS inverters.**

I. INTRODUCTION

Linearity is one of the most important criteria in Nauta structure op-amp [1] implemented in sub-micron technology because it directly affects the performance of many applications such as pipeline ADC [2], sigma-delta ADC [3] and high quality filters [4] which employ the op-amp as either core amplifiers or transconductor circuits. In this paper, we examine a characteristic of the op-amp's inverters that may result in a possible approach to improve the linearity of Nauta transconductor, then propose a means to justify the feasibility of such approach.

The idea is based around a fact that in Nauta transconductor the open-loop gain is heavily dependent on the cross-coupled (CC) and self-coupled (SC) inverters' transconductance and their output resistance so that very high DC-gain can be achieved if those values are matched and satisfy certain conditions. While the design of tunable transconductance in Nauta circuit provides us a means to obtain such high DC-gain characteristic [5], the insertion of transistor switches itself introduces some resistance at the source terminal of each individual inverter in Nauta transconductor. Therefore, it can be seen that the design of tunable Nauta transconductor inherently improves the linearity of Nauta transconductor owing to the effect of source resistance on the CMOS inverters which will be discussed in the next section. Indeed, the work shown in this paper indicates that very high open-loop gain with lower non-linear distortions can be achieved by 2-step calibration of both CC and SC inverters in Nauta transconductor. This process is applied to a design of digitally-controlled Nauta structure op-amp in 65nm process as discussed in [5].

II. THE EFFECT OF SOURCE RESISTANCE ON SELF-COUPLED COMPLEMENTARY CS STAGE

In a Nauta circuit shown in Fig. 1, the SC inverter, which is used as complementary common source (CS) stage with all transistors operate in saturation, works as a unity gain buffer because both of its input and output join directly to the output terminal of the Nauta structure [1]. Therefore, the non-linear distortion which happens in the large signal operation of the inverter contributes directly to the non-linear distortion at the output of the Nauta structure op-amp. Moreover, in elementary CMOS transistor circuits, the amplitude of fundamental and higher order harmonics depends on the peak value of relative current swing as well as gate-source input voltage [6]. In fact, consider a self-coupled complementary CS stage without source resistance in Fig. 2(a), and for the simplicity of calculation we assume nMOS and pMOS transistors are identical (i.e. $K_n = K_p$), the expression for total relative current swing in the SC inverter can be derived from transistor's square-law equations. It is shown as below:

$$i_p = \frac{I_{dsn} - I_{dsp}}{I_{DS}} = \frac{2c_1 v_{op}}{(V_{cm} - V_{tn})(V_{dd} - V_{cm} - V_{tp})} + \frac{c_2 v_{op}^2}{\left[(V_{cm} - V_{tn})(V_{dd} - V_{cm} - V_{tp})\right]^2} \quad (1)$$

Where c_1 and c_2 are coefficients as shown below:

$$c_1 = (V_{dd} - 2V_{cm} + V_{tn} - V_{tp}) \quad (2)$$

$$c_2 = c_1(V_{dd} - V_{tn} - V_{tp}) \quad (3)$$

In Nauta OTA with enable switches, because there is resistance in the source terminal of the self-coupled complementary CS stage as shown in Fig. 2(b), the resistance acts as local feedback and linearizes the relative current swing so that it reduces both gain and distortion [6]. It can be seen that the amount of feedback T is proportional to the transconductance of the self-coupled complementary CS stage as well as its source resistance R_s, or equivalently $T = g_m R_s$. Applying Taylor's expansion to realize the coefficients in (1) as following:

Authorized licensed use limited to: Università degli Studi di Brescia. Downloaded on July 25,2024 at 08:59:18 UTC from IEEE Xplore. Restrictions apply.

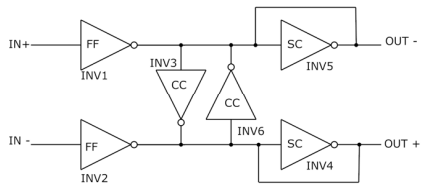

Fig. 1. Nauta Transconductor [1].

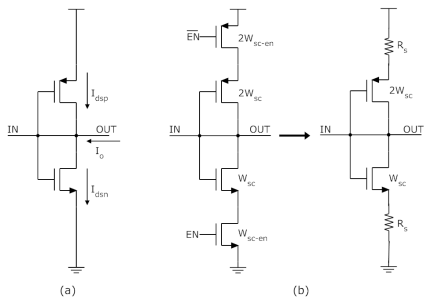

Fig. 2. A Self-coupled (SC) complementary CS stage without (a) and with (b) source resistance.

$$a_1 = 2c_1 \tag{4}$$

$$a_2 = c_2 = c_1(V_{dd} - V_{tn} - V_{tp}) \tag{5}$$

$$a_3 = 0 \tag{6}$$

where a_1, a_2, a_3 are Taylor coefficients of the peak relative current of the self-coupled complementary CS stage without source resistance. Applying these coefficients for the calculation of higher order harmonics HD_2 and HD_3 in circuit shown in Fig. 2(b), we have:

$$HD_2 = \frac{1}{2}\left(V_{dd} - V_{tn} - V_{tp}\right)\frac{i_p}{1+T} \tag{7}$$

$$HD_3 = -\frac{1}{4}\frac{\left(V_{dd} - V_{tn} - V_{tp}\right)T}{(1+T)^2}i_p^2 \tag{8}$$

It can be seen that for the SC inverters with source resistance the higher order harmonics is inversely proportional to the amount of feedback T. Therefore, it can be expected that the power of higher order harmonic distortion reduces as the source resistance increases. Specifically, (7) shows that for HD_2, its power decreases linearly with the amount of feedback. However, in differential configuration of Nauta OTA, the second order harmonics will be suppressed to 0.

As for HD_3, according to (8), it can be seen that its power is reduced significantly if the amount of feedback is large enough. Therefore, the smaller the switch is, the larger source resistance can be obtained which in turn greatly reduce the power of third order harmonic and thus linearity enhancement is achieved.

It should also be noticed that the power of higher order harmonic is proportional to the supply voltage (V_{dd}) and threshold voltage of pMOS and nMOS transistors. However, variable power supply and different transistor parameters will not be discussed in this paper.

III. Tuning Approaches for Nauta Structure Op-Amp

A. The Characteristic of Nauta OTA's Open-loop Gain

One of the most promising features of Nauta transconductor is that very high DC-gain can be obtained merely by choosing CMOS inverter's dimensions so that the output conductance of the transconductor is ideally cancelled out [4]. In practice, it would be obvious that real circuits suffer from mismatch and variations in CMOS fabrication processes, resulting in finite DC-gain [1]. As a result, several methods have been researched and applied to adjust the circuit's parameters in such way that the output conductance of the transconductor becomes zero regardless of its manufacturing issues. In conventional Nauta structure, the output conductance of the circuit is tuned by mean of applying different power supply voltage to self-coupled inverters (i.e. V_{dd}') [1] while the other parts remain unchanged. In contrast, a Nauta structure with digitally-controlled transconductance is designed by employing the idea that the DC-gain of Nauta transconductor can be tuned by turning on and off some parts of inverter arrays that made up the Nauta structure op-amp [5]. Each method has its own pros and cons but the cancellation of the output conductance is still achievable without messing up with circuit complexity.

In the design of Nauta structure with digitally-controlled transconductance, the size of CC and SC inverters can be changed dependently to the logic assertion of the controller. This brings us an opportunity to sweep through all possible combination of inverter's dimension. Fig. 3 shows a surface plot of the behavior of Nauta OTA's open-loop gain with inverters' dimension normalized to 1. It can be seen that the coordinates which shows high DC-gain reside in the region where CC inverters' dimension is larger than that of SC inverters. However, the value $(g_{m,SC} - g_{m,CC})$ should be kept in certain range to ensure the stable operation of the Nauta op-amp [7].

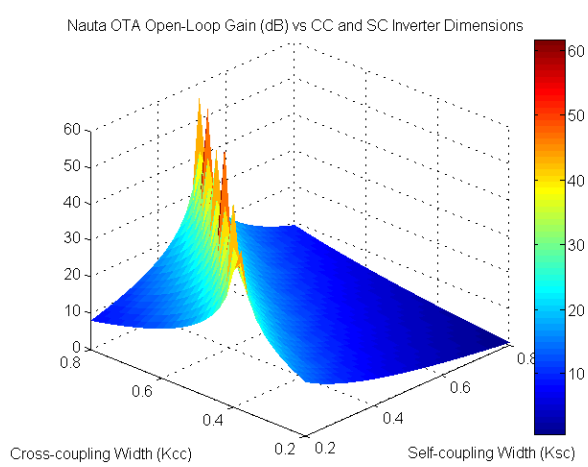

Fig. 3. Surface plot of Nauta structure OTA's open-loop gain versus its CC and SC inverters' sizes.

Authorized licensed use limited to: Università degli Studi di Brescia. Downloaded on July 25,2024 at 08:59:18 UTC from IEEE Xplore. Restrictions apply.

B. 2-Step Calibration for Gain Loss Compensation

While the intrinsic gain of Nauta OTA can be controlled in situ to obtain desired value, the effect of source resistance on self-coupled complementary CS stage can be utilized to reduce its non-linear distortion at the expense of gain. This is because changing the source resistance will also change the transconductance ($g_{m,SC}$) of the SC inverter. Therefore, combining the two characteristics will help to enhance the linearity of Nauta OTA without reducing its open-loop gain. In this paper, a 2-step calibration is proposed as follow:

Step 1: Nominate a pair of CC and SC inverter dimensions that give us desired intrinsic gain (normally the best possible gain) then reduce the size of SC inverter switches by certain amount to improve the linearity of the inverter.

Step 2: Sweep through all possible value of CC inverter dimension to search for the nominated open-loop gain which is already compromised in the step 1.

In fact, the CC inverter dimension and, therefore, its transconductance ($g_{m,CC}$) is adjusted dependently on the transconductance ($g_{m,SC}$) of SC inverter. Nevertheless, as the drain-source current of the two inverters join together in the same output node, the effect of source resistance on SC inverter is not affected by the change in CC inverter dimension. As an illustration, Fig. 4 shows a typical CC inverter sweeping process which indicates an optimal point of CC inverter width at 0.6 (normalized to 1) corresponding to optimal SC inverter switches size at 0.28. As the CC inverter dimension increases from 0.2 to 0.6, the Nauta OTA's open-loop gain increases until it reaches nominated gain (40dB) at which THD equals 0.1%, and then goes to unstable and inverted regions (i.e. 180º phase shift). Another critical point in 2-step calibration is that this strategy can be used through multiple iterations to reach optimal transistor dimensions, however; one needs to take into account the fact that unstable operation of Nauta structure may happen if the transconductance of SC inverter is too large so there is no value of CC inverter can be found to compensate the gain loss.

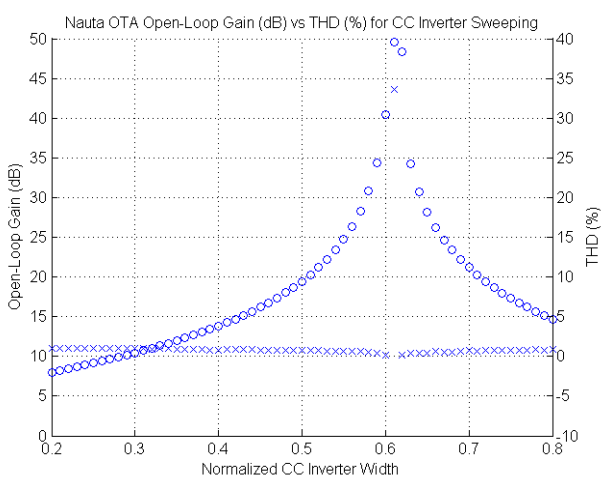

Fig. 4. Gain curve (bubbles) and THD curve (cross) versus CC inverter width.

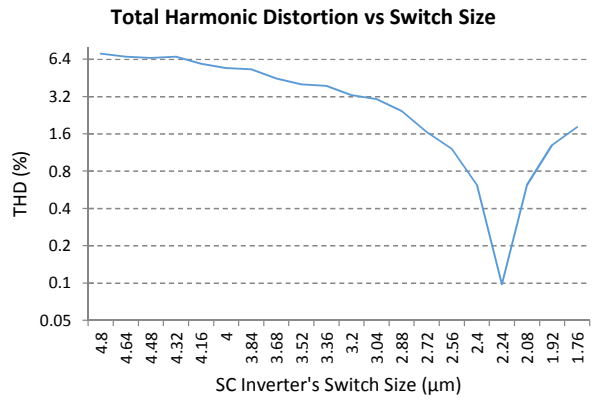

Fig. 5. Total harmonic distortion curve versus SC inverter's switch size variation.

IV. Circuit Simulation and Results

A. Simulation Setup for Evaluation

To examine the above theory about the effect of source resistance on linearity of Nauta structure OTA, we create a circuit that simply mimics the operation of Nauta structure op-amp with digitally-controlled transconductance which is presented in [5]. The purpose of this circuit is to simplify simulation process so that we obtain liberation to control inverter dimensions without discrete digital steps while the impact of off-state inverters in the Nauta structure op-amp is still taken into account.

In fact, the transistor dimensions are controlled by scaling coefficients corresponding to each unit inverter: K_{FF}, K_{CC} and K_{SC} which are normalized to 1. The dimension of the switch of self-coupled inverter is controlled by $K_{SC,EN}$ coefficient, and a constraint ($0<K<1$) is applied to all coefficients to avoid numerical error. The strategy used to evaluate the improvement of Nauta structure's linearity is to observe the change in THD at the output terminals of the transconductor while $K_{SC,EN}$ varies. Nevertheless, it should be noticed that the relationship between open-loop gain, input amplitude and THD makes it impossible to optimise the linearity of the transconductor without impacting these other qualities. Therefore, in this simulation, one important constraint is that open-loop gain is kept constant for each iteration as discussed in 2-step calibration section.

The simulator is setup to run with 1mV sinusoid input at the frequency of 1kHz which is inside the bandwidth of the Nauta op-amp. To achieve the best resolution for the gain-THD plot as shown in Fig. 4, we run parametric sweeping at 0.01 linear increment for CC inverter's dimension. The size of SC inverter's switches is also reduced in 0.02 linear step which requires a loop of 20 iterations. It is expected that at the end of the loop, optimal size of the SC inverter's switch and CC inverter dimension can be obtained.

Authorized licensed use limited to: Università degli Studi di Brescia. Downloaded on July 25,2024 at 08:59:18 UTC from IEEE Xplore. Restrictions apply.

TABLE I.
COMPARISON OF DIFFERENT INPUT POWER WITH SWITCH SIZES

Switch Size/Input Amplitude	**1mV**		**3mV**		**5mV**	
	THD (%)	V_o (mV)	THD (%)	V_o (mV)	THD (%)	V_o (mV)
3.36 µm	3.9	100	11.2	200	14.6	250
2.24 µm	0.097	98	4	250	10	330

B. Simulation Results

Fig. 5 shows the change in THD measured in percentage versus SC inverter's switch size measured in µm. It can be seen that the THD of Nauta structure decreases significantly as the size of the switch is reduced. In other words, the linearity of Nauta transconductor is greatly improved by making the size of the switch of SC inverter smaller than that of its main transistor. Nevertheless, it should be noticed that one critical point in Fig. 5 is when the width of switches (i.e. W_{sc}) reaches 2.24µm and the THD starts to rise again. This means that the size of the switches can not be reduced excessively. As discussed above, the reason for this phenomenon may be the over-compensation of output conductance that happens when the size of the switch transistors is too small so the total output conductance is no longer cancelled out by tuning CC inverter's dimension.

As the THD of Nauta transconductor is reduced, the output voltage swing of the circuit is also improved significantly. Because we choose the nominated gain to be 40dB to observe the improvement of THD, the output voltage swing enhancement can be examined by increasing input amplitude and compare both THD and output voltage swing as illustrated in Table I. It can be seen that at 3mV input amplitude, the output voltage swing of the Nauta transconductor with optimal switch size increases by 50mV, and it has the same THD with the original design at 1mV amplitude.

Finally, Fig. 6 compares the FFT spectrum of the output signal of Nauta transconductor corresponding to the original design (i.e. switch size = 3.36µm) versus that of switch-optimized design (i.e. switch size = 2.24µm). It can be seen that the two designs share the same fundamental signal level (i.e. at 1kHz) at -20dB but the optimal design shows significant reduction in all higher order harmonic distortions . Moreover, the power of HD_3 reduces from -49.9 dB to -80.86 dB which translates to 30.96 dB improvement in dynamic range (DR). This DR enhancement also agrees with the huge drop in THD in Fig. 5 and shows the evidence of the improvement of linearity in the optimized circuit of Nauta transconductor.

V. CONCLUSION

The work in this paper showed the possibility of utilizing the effect of source resistance on CMOS complementary CS stage in Nauta transconfuctor circuit to improve its linearity. In fact, while the enable switches of the SC inverters served as

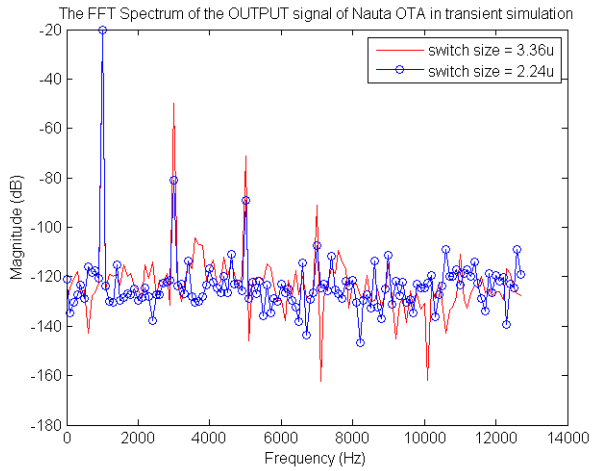

Fig. 6. FFT spectrum of Nauta structure OTA's output for 1mV input signal.

digital controller, it could also be utilized as linear resistors at the source terminal of the main transistors in each SC inverter. This provided an adjustable amount of local feed back to the SC inverter without changing its circuitry when the switches were in ON state. Also, because of the increase in the source resistance of SC inverter during its linearization, 2-step calibration method was discussed to compensate the gain which was compromised by the change in the transconductance value $g_{m,SC}$ of the Nauta op-amp. Additionally, the simulation of Nauta transconductor circuit designed in 65nm process with optimized switch size indicated the improvement of its THD, output voltage swing as well as the reduction in the power of all higher harmonics, making it very appealing to applications where low distortion is desirable.

REFERENCES

[1] B. Nauta, "Analog CMOS Filters for Very High Frequencies," *Kluwer Academic*, 1993.

[2] A. Nicholson, J. Jenkins, A. N. Irfansyah, N. Politi, A. van Schaik, T. J. Hamilton, and T. Lehmann, "A 0.3mm2 10-b 100MS/s pipelined ADC using Nauta structure op-amps in 180nm CMOS," *IEEE International Symposium on Circuits and Systems*, pp. 1833–1836, 2013.

[3] A. N. Irfansyah, L. Pham, A. Nicholson, T. Lehmann; J. Jenkins, T. J. Hamilton, "Nauta OTA in a second-order continuous-time delta-sigma modulator," *Midwest Symposium on Circuits and Systems*, pp. 849 - 852, 2014.

[4] B. Nauta, "A CMOS transconductance-C Filter Technique for Very High Frequencies," *IEEE J. of Solid-State Circuits 27*, pp. 142-53, 1992.

[5] A. Nicholson, J. Jenkins, A. van Schaik, T. J. Hamilton, T. Lehmann, "A Digital To Transconductance Converter for Nauta Structure op-amps in 65nm CMOS," *57th International Midwest Symposium on Circuits and Systems,* 2014.

[6] W. Sansen *et al.*, "Distortion in Elementary Transistor Circuit," *IEEE Transactions on Circuits and Systems—ii: Analog and Digital Signal Processing,* vol. 46, no. 3, pp. 315, March 1999.

[7] A. Iberzanov, A. Nicholson, J. Jenkins, T. Lehmann, T. J. Hamilton, "Calibration of the Nauta structure differential OTA," *IEEE Asia-Pacific Conference on Circuits and Systems, Proceedings, APCCAS*, pp. 189 – 192, 2015.

Authorized licensed use limited to: Università degli Studi di Brescia. Downloaded on July 25,2024 at 08:59:18 UTC from IEEE Xplore. Restrictions apply.