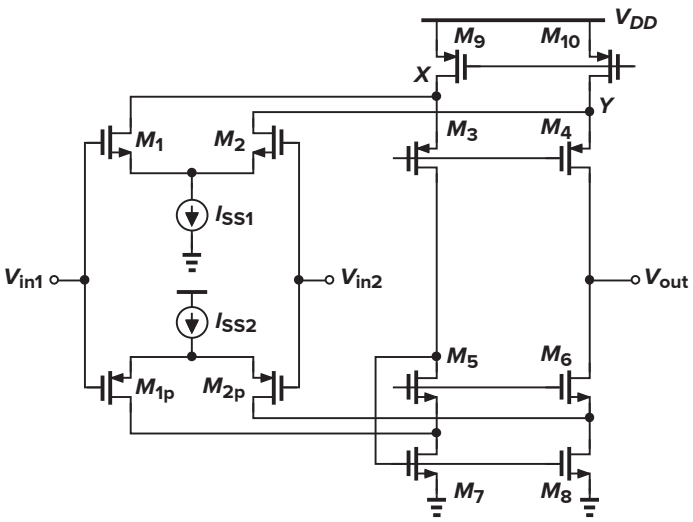

Figure 9.66 Extension of input CM range.

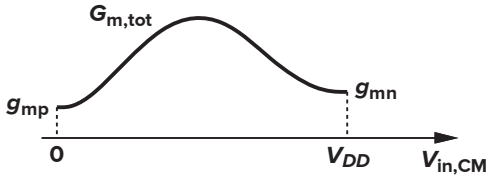

Figure 9.67 Variation of equivalent transconductance with the input CM level.

9.9 ■ Slew Rate

Op amps used in feedback circuits exhibit a large-signal behavior called "slewing." We first describe an interesting property of *linear* systems that vanishes during slewing. Consider the simple RC network shown in Fig. 9.68, where the input is an ideal voltage step of height V_0. Since $V_{out} = V_0[1-\exp(-t/\tau)]$, where $\tau = RC$, we have

$$\frac{dV_{out}}{dt} = \frac{V_0}{\tau}\exp\frac{-t}{\tau} \tag{9.58}$$

That is, the slope of the step response is proportional to the final value of the output; if we apply a larger input step, the output rises more rapidly. This is a fundamental property of linear systems: if the input amplitude is, say, doubled while other parameters remain constant, the output signal level must double at *every* point, leading to a twofold increase in the slope.

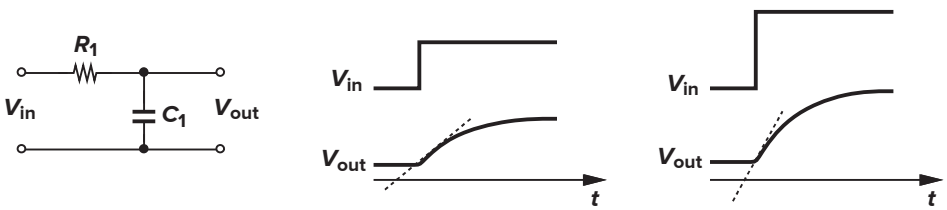

Figure 9.68 Response of a linear circuit to an input step.

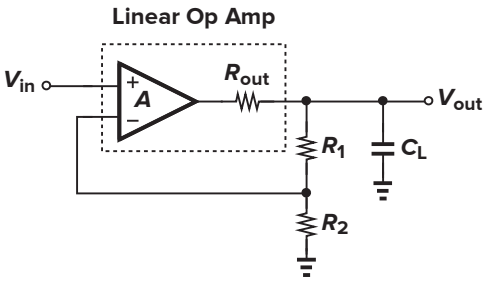

Figure 9.69 Response of linear op amp to step response.

The foregoing observation applies to linear feedback systems as well. Shown in Fig. 9.69 is an example, where the op amp is assumed linear. Here, we can write

$$\left[\left(V_{in} - V_{out}\frac{R_2}{R_1+R_2}\right)A - V_{out}\right]\frac{1}{R_{out}} = \frac{V_{out}}{R_1+R_2} + V_{out}C_L s \tag{9.59}$$

Assuming $R_1 + R_2 \gg R_{out}$, we have

$$\frac{V_{out}}{V_{in}}(s) \approx \frac{A}{\left(1 + A\dfrac{R_2}{R_1+R_2}\right)\left[1 + \dfrac{R_{out}C_L}{1 + AR_2/(R_1+R_2)}s\right]} \tag{9.60}$$

As expected, both the low-frequency gain and the time constant are divided by $1 + AR_2/(R_1 + R_2)$. The step response is therefore given by

$$V_{out} \approx V_0 \frac{A}{1 + A\dfrac{R_2}{R_1+R_2}}\left[1 - \exp\frac{-t}{\dfrac{C_L R_{out}}{1 + AR_2/(R_1+R_2)}}\right]u(t) \tag{9.61}$$

indicating that the slope is proportional to the final value. This type of response is called "linear settling."

With a realistic op amp, on the other hand, the step response of the circuit begins to deviate from (9.61) as the input amplitude increases. Illustrated in Fig. 9.70, the response to sufficiently small inputs follows the exponential of Eq. (9.61), but with large input steps, the output displays a linear *ramp* having a *constant slope*. Under this condition, we say that the op amp experiences slewing and call the slope of the ramp the "slew rate."

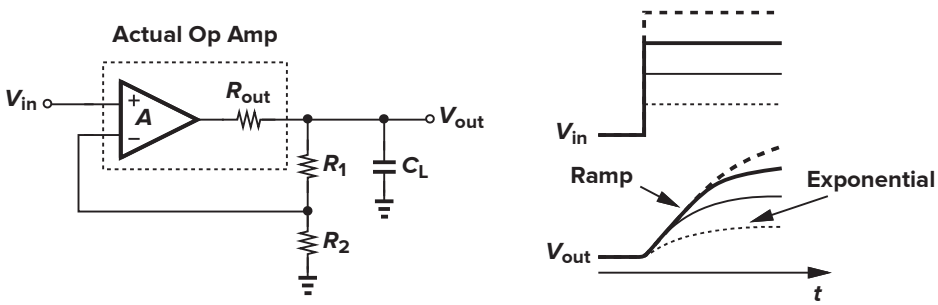

Figure 9.70 Slewing in an op amp circuit.

To understand the origin of slewing, let us replace the op amp of Fig. 9.70 by a simple CMOS implementation (Fig. 9.71), assuming for simplicity that $R_1 + R_2$ is very large. We first examine the circuit with a small input step. If V_{in} experiences a change of ΔV, I_{D1} increases by $g_m \Delta V/2$ and I_{D2} decreases by $g_m \Delta V/2$. Since the mirror action of M_3 and M_4 raises $|I_{D4}|$ by $g_m \Delta V/2$, the total small-signal current provided by the op amp equals $g_m \Delta V$. This current begins to charge C_L, but as V_{out} rises, so does V_X, reducing the difference between V_{G1} and V_{G2} and hence the output current of the op amp. As a result, V_{out} varies according to (9.61).

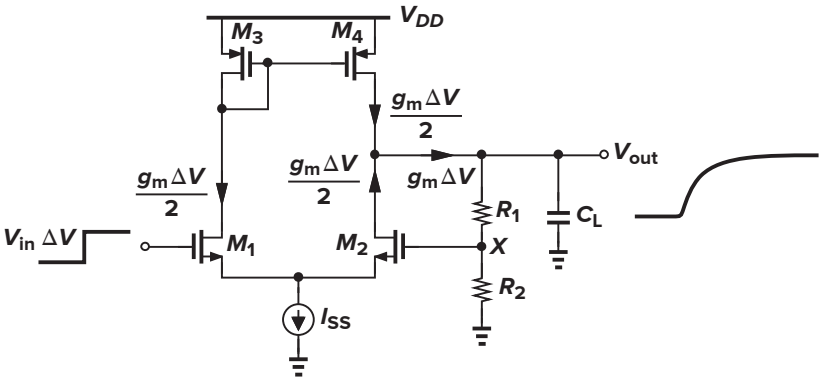

Figure 9.71 Small-signal operation of a simple op amp.

Now suppose ΔV is so large that M_1 absorbs all of I_{SS}, turning off M_2. The circuit then reduces to that shown in Fig. 9.72(a), generating a ramp output with a slope equal to I_{SS}/C_L (if the channel-length modulation of M_4 and the current drawn by $R_1 + R_2$ are neglected). Note that so long as M_2 remains off, the feedback loop is broken and the current charging C_L is constant and independent of the input level. As V_{out} rises, V_X eventually approaches V_{in}, M_2 turns on, and the circuit returns to linear operation.

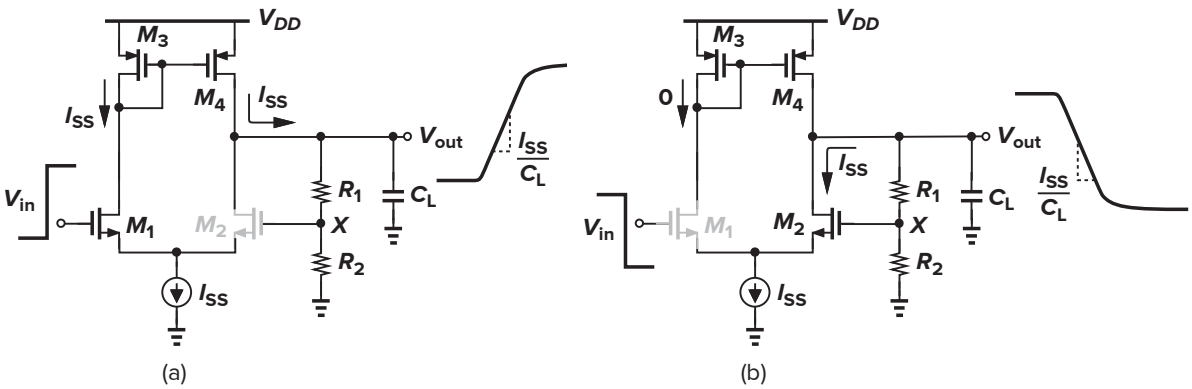

Figure 9.72 Slewing during (a) low-to-high and (b) high-to-low transitions.

In Fig. 9.71, slewing occurs for falling edges at the input as well. If the input drops so much that M_1 turns off, then the circuit is simplified as in Fig. 9.72(b), discharging C_L by a current approximately equal to I_{SS}. After V_{out} decreases sufficiently, the difference between V_X and V_{in} is small enough to allow M_1 to turn on, leading to linear behavior thereafter.

The foregoing observations explain why slewing is a nonlinear phenomenon. If the input amplitude, say, doubles, the output level does not double at *all* points because the ramp exhibits a slope independent of the input.

Slewing is an undesirable effect in high-speed circuits that process large signals. While the small-signal bandwidth of a circuit may suggest a fast time-domain response, the large-signal speed may be limited by the slew rate simply because the current available to charge and discharge the dominant capacitor in the circuit is small. Moreover, since the input-output relationship during slewing is nonlinear, the output of a slewing amplifier exhibits substantial distortion. For example, if a circuit is to amplify a sinusoid $V_0 \sin \omega_0 t$ (in the steady state), then its slew rate must exceed $V_0\omega_0$.

▶ Example 9.22

Consider the feedback amplifier depicted in Fig. 9.73(a), where C_1 and C_2 set the closed-loop gain. (The bias network for the gate of M_2 is not shown.) (a) Determine the small-signal step response of the circuit. (b) Calculate the positive and negative slew rates.

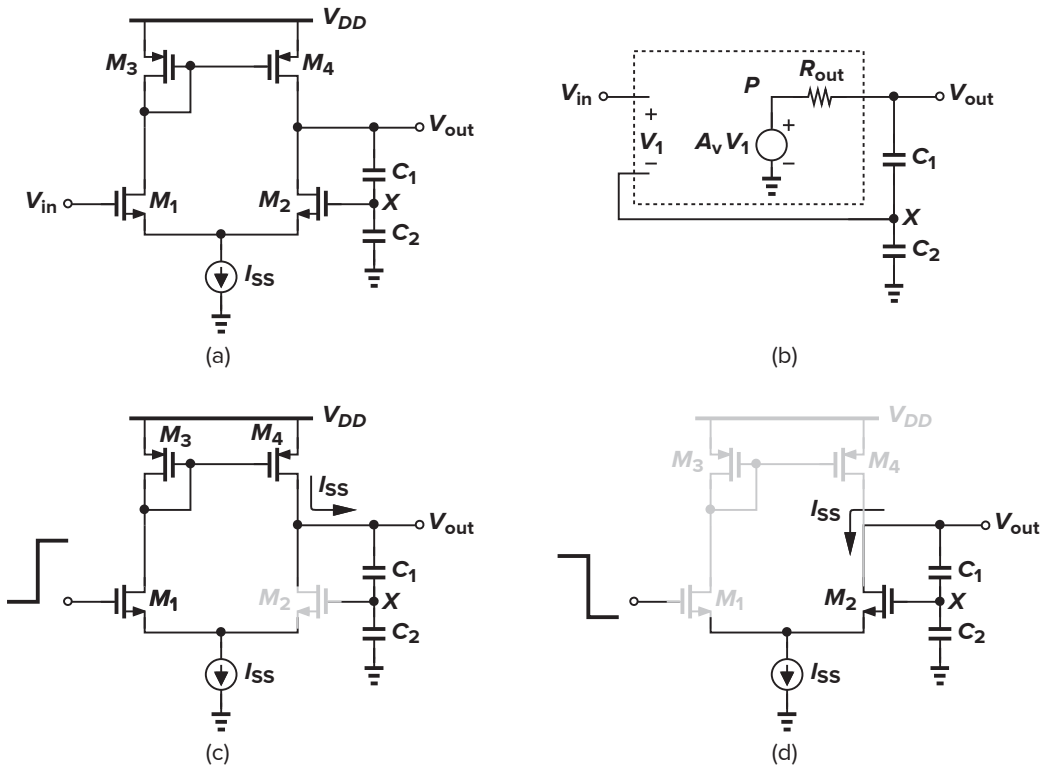

Figure 9.73

Solution

(a) Modeling the op amp as in Fig. 9.73(b), where $A_v = g_{m1,2}(r_{O2}\|r_{O4})$ and $R_{out} = r_{O2}\|r_{O4}$, we have $V_X = C_1 V_{out}/(C_1 + C_2)$, and hence

$$V_P = \left(V_{in} - \frac{C_1}{C_1 + C_2} V_{out}\right) A_v \tag{9.62}$$

obtaining

$$\left[\left(V_{in} - \frac{C_1}{C_1 + C_2} V_{out}\right) A_v - V_{out}\right] \frac{1}{R_{out}} = V_{out} \frac{C_1 C_2}{C_1 + C_2} s \tag{9.63}$$

It follows that

$$\frac{V_{out}}{V_{in}}(s) = \frac{A_v}{1 + A_v \dfrac{C_1}{C_1 + C_2} + \dfrac{C_1 C_2}{C_1 + C_2} R_{out} s} \tag{9.64}$$

$$= \frac{A_v / \left(1 + A_v \dfrac{C_1}{C_1 + C_2}\right)}{1 + \dfrac{C_1 C_2}{C_1 + C_2} R_{out} s / \left(1 + A_v \dfrac{C_1}{C_1 + C_2}\right)} \tag{9.65}$$

revealing that both the low-frequency gain and the time constant of the circuit have decreased by a factor of $1 + A_v C_1/(C_1 + C_2)$. The response to a step of height V_0 is thus given by

$$V_{out}(t) = \frac{A_v}{1 + A_v \dfrac{C_1}{C_1 + C_2}} V_0 \left(1 - \exp \frac{-t}{\tau}\right) u(t) \tag{9.66}$$

where

$$\tau = \frac{C_1 C_2}{C_1 + C_2} R_{out} / \left(1 + A_v \frac{C_1}{C_1 + C_2}\right) \tag{9.67}$$

(b) Suppose a large positive step is applied to the gate of M_1 in Fig. 9.73(a) while the initial voltage across C_1 is zero. Then, M_2 turns off and, as shown in Fig. 9.73(c), V_{out} rises according to $V_{out}(t) = I_{SS}/[C_1 C_2/(C_1 + C_2)]t$. Similarly, for a large negative step at the input, Fig. 9.73(d) yields $V_{out} = -I_{SS}/[C_1 C_2/(C_1 + C_2)]t$. ◀

As another example, let us find the slew rate of the telescopic op amp shown in Fig. 9.74(a). When a large differential input is applied, M_1 or M_2 turns off, reducing the circuit to that shown in Fig. 9.74(b). Thus, V_{out1} and V_{out2} appear as ramps with slopes equal to $\pm I_{SS}/(2C_L)$, and consequently $V_{out1} - V_{out2}$ exhibits a slew rate equal to I_{SS}/C_L. (Of course, the circuit is usually used in closed-loop form.)

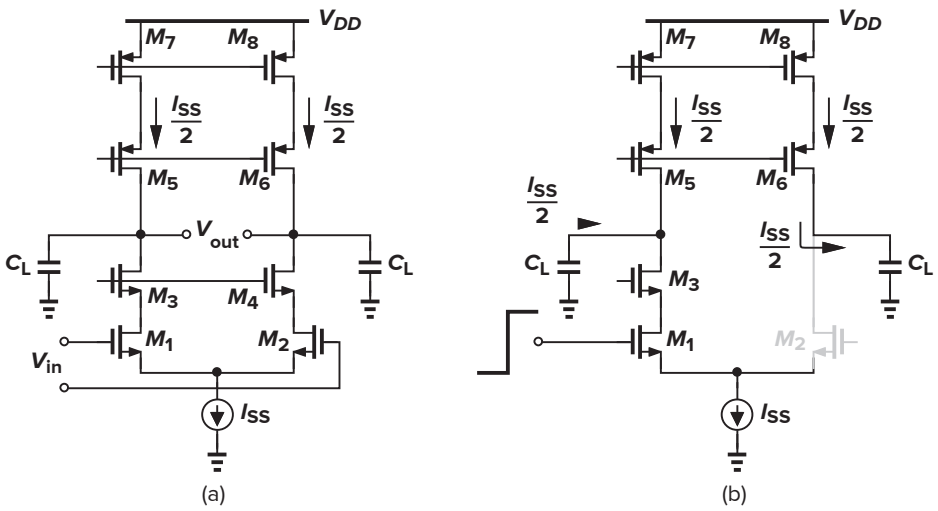

Figure 9.74 Slewing in telescopic op amp.

It is also instructive to study the slewing behavior of a folded-cascode op amp with single-ended output [Fig. 9.75(a)]. Figures 9.75(a) and (b) depict the equivalent circuit for positive and negative input steps,

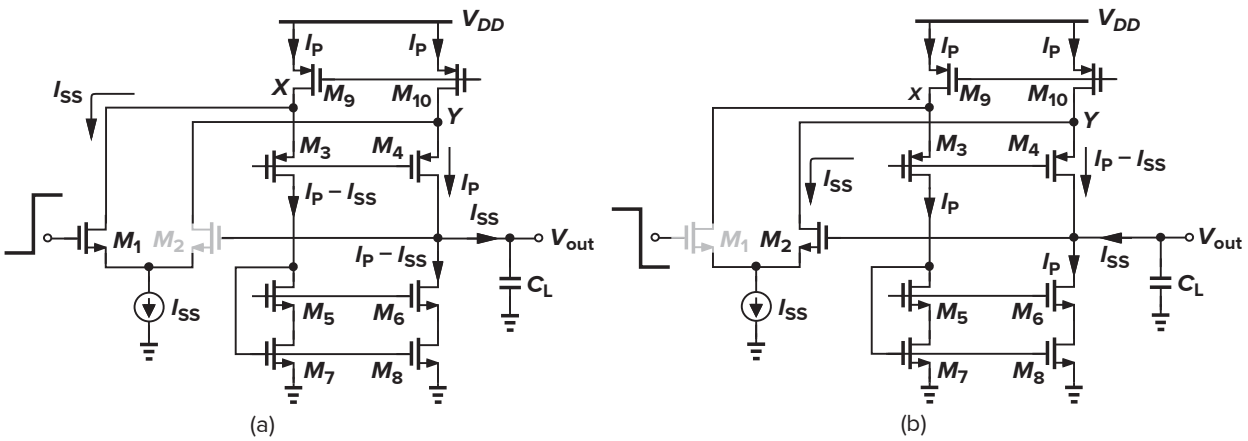

Figure 9.75 Slewing in folded-cascode op amp.

respectively. Here, the PMOS current sources provide a current of I_P, and the current that charges or discharges C_L is equal to I_{SS}, yielding a slew rate of I_{SS}/C_L. Note that the slew rate is independent of I_P if $I_P \geq I_{SS}$. In practice, we choose $I_P \approx I_{SS}$.

In Fig. 9.75(a), if $I_{SS} > I_P$, then during slewing, M_3 turns off and V_X falls to a low level such that M_1 and the tail current source enter the triode region. Thus, for the circuit to return to equilibrium after M_2 turns on, V_X must experience a large swing, slowing down the settling. This phenomenon is illustrated in Fig. 9.76.

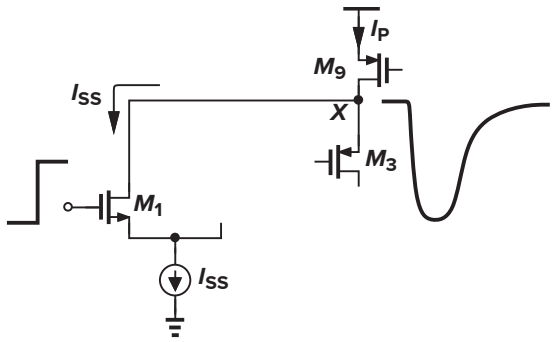

Figure 9.76 Long settling due to overdrive recovery after slewing.

To alleviate this issue, two "clamp" transistors can be added as shown in Fig. 9.77(a) [9]. The idea is that the difference between I_{SS} and I_P now flows through M_{11} or M_{12}, requiring only enough drop in V_X or V_Y to turn on one of these transistors. Figure 9.77(b) illustrates a more aggressive approach, where M_{11} and M_{12} clamp the two nodes directly to V_{DD}. Since the equilibrium value of V_X and V_Y is usually higher than $V_{DD} - V_{THN}$, M_{11} and M_{12} are off during small-signal operation.

What trade-offs are encountered in increasing the slew rate? In the examples of Figs. 9.74 and 9.75, for a given load capacitance, I_{SS} must be increased, and to maintain the same maximum output swing, all of the transistors must be made proportionally wider. As a result, the power dissipation and the input capacitance are increased. Note that if the device currents and widths scale together, $g_m r_O$ of each transistor, and hence the open-loop gain of the op amp, remain constant.

How does an op amp leave the slewing regime and enter the linear-settling regime? Since the point at which one of the input transistors "turns on" is ambiguous, the distinction between slewing and linear settling is somewhat arbitrary. The following example illustrates the point.

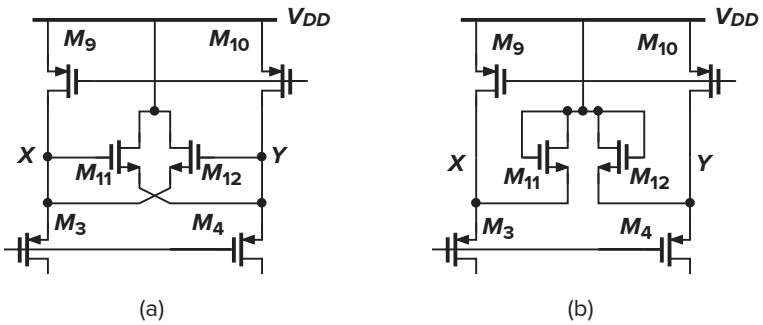

Figure 9.77 Clamp circuit to limit swings at X and Y.

▶ Example 9.23

Consider the circuit of Fig. 9.73(a) in the slewing regime [Fig. 9.73(c)]. As V_{out} rises, so does V_X, eventually turning M_2 on. As I_{D2} increases from zero, the differential pair becomes more linear. Considering M_1 and M_2 to operate linearly if the difference between their drain currents is less than αI_{SS} (e.g., $\alpha = 0.1$), determine how long the circuit takes to enter linear settling. Assume the input step has an amplitude of V_0.

Solution

The circuit displays a slew rate of $I_{SS}/[C_1C_2/(C_1 + C_2)]$ until $|V_{in1} - V_{in2}|$ is sufficiently small. From Chapter 4, we can write

$$\alpha I_{SS} = \frac{1}{2}\mu_n C_{ox}\frac{W}{L}(V_{in1} - V_{in2})\sqrt{\frac{4I_{SS}}{\mu_n C_{ox}\frac{W}{L}} - (V_{in1} - V_{in2})^2} \tag{9.68}$$

obtaining

$$\Delta V_G^4 - \Delta V_G^2\frac{4I_{SS}}{\mu_n C_{ox}\frac{W}{L}} + \left(\frac{2\alpha I_{SS}}{\mu_n C_{ox}\frac{W}{L}}\right)^2 = 0 \tag{9.69}$$

where $\Delta V_G = V_{in1} - V_{in2}$. Thus,

$$\Delta V_G \approx \alpha\sqrt{\frac{I_{SS}}{\mu_n C_{ox}\frac{W}{L}}} \tag{9.70}$$

(Recall that $\sqrt{I_{SS}/[\mu_n C_{ox}(W/L)]}$ is the equilibrium overdrive voltage of each transistor in the differential pair.) Alternatively, we recognize that for a small difference, αI_{SS}, between I_{D1} and I_{D2}, a small-signal approximation is valid: $\alpha I_{SS} = g_m \Delta V_G$. Thus, $\Delta V_G = \alpha I_{SS}/g_m \approx \alpha I_{SS}/\sqrt{\mu_n C_{ox}(W/L)I_{SS}}$. Note that this is a rough calculation because as M_2 turns on, the current charging the load capacitance is no longer constant.

Since V_X must rise to $V_0 - \Delta V_G$ for M_2 to carry the required current, V_{out} increases by $(V_0 - \Delta V_G)(1 + C_2/C_1)$, requiring a time given by

$$t = \frac{C_2}{I_{SS}}\left(V_0 - \alpha\sqrt{\frac{I_{SS}}{\mu_n C_{ox}\frac{W}{L}}}\right) \tag{9.71}$$

◀

In the earlier example, the value of α that determines the onset of linear settling depends, among other things, on the actual required linearity. In other words, for a nonlinearity of 1%, α can be quite a lot larger than for a nonlinearity of 0.1%.

The slewing behavior of two-stage op amps is somewhat different from that of the circuits studied earlier. This case is studied in Chapter 10.

9.10 ■ High-Slew-Rate Op Amps

Our formulation of the slew rate in various op amp topologies implies that, for a given capacitance, slew-limited settling can be improved only by raising the bias current and hence the power consumption. This trade-off can be mitigated if the current available to charge the capacitor of interest automatically rises during slewing and falls back to its original value thereafter. In this section, we study op amp topologies that exploit this idea.

9.10.1 One-Stage Op Amps

We begin with a simple common-source stage incorporating a current-source load biased at a value of I_0 [Fig. 9.78(a)]. In the absence of an input signal, $I_{D1} = I_0$, but if V_{in} jumps down to turn M_1 off, then I_0 flows through C_L, yielding a slew rate of I_0/C_L.[7] Can we automatically increase the drain current of M_2 during this transient? To this end, we must allow V_b to change and, in fact, follow the jump in V_{in}. For example, as shown in Fig. 9.78(b), we can simply apply V_{in} to both transistors so that a downward jump in V_{in} also raises $|I_{D2}|$. This complementary topology was studied in Chapter 3 and found to suffer from poor power supply rejection. We pursue other topologies here.

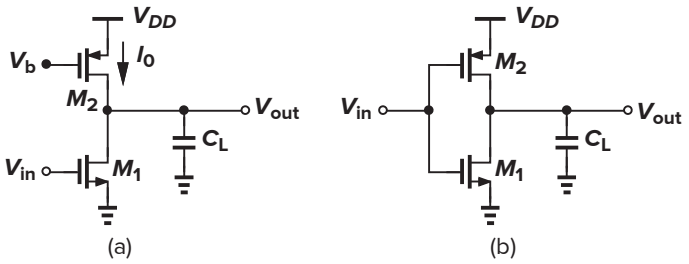

Figure 9.78 Slewing in (a) a simple CS stage and (b) a complementary CS stage.

Let us control M_2 in Fig. 9.78(a) by current mirror action, as depicted in Fig. 9.79(a), and ask how I_b must be controlled by V_{in}. Can I_b be derived from another common-source device [Fig. 9.79(b)]? No; as V_{in} jumps down in this circuit, I_b *decreases*. We must therefore include an additional signal inversion in the path controlling I_b. Alternatively, we can consider a differential topology, where both the input signal, V_{in}^+, and its inverted version, V_{in}^-, are available. Illustrated in Fig. 9.79(c), the idea is to control the bias current of M_2 by V_{in}^- and that of M_4 by V_{in}^+. For example, if V_{in}^+ jumps down and V_{in}^- jumps up, then (1) M_5 draws less current from M_8, lowering $|I_{D4}|$, (2) M_3 draws more current, discharging its load capacitance, (3) M_6 draws more current from M_7, raising $|I_{D2}|$, and (4) M_1 draws less current, allowing its drain capacitance to be charged by M_2.

The circuits of Figs. 9.78(b) and 9.79(c) are called "push-pull" stages as they turn the load current source into an "active" pull-up device. Loosely speaking, we also refer to them as "class-AB" amplifiers.[8]

[7] If V_{in} jumps *up*, M_1 must absorb both I_0 and the current flowing out of C_L.

[8] By contrast, topologies with a constant bias current are called "class-A" amplifiers.

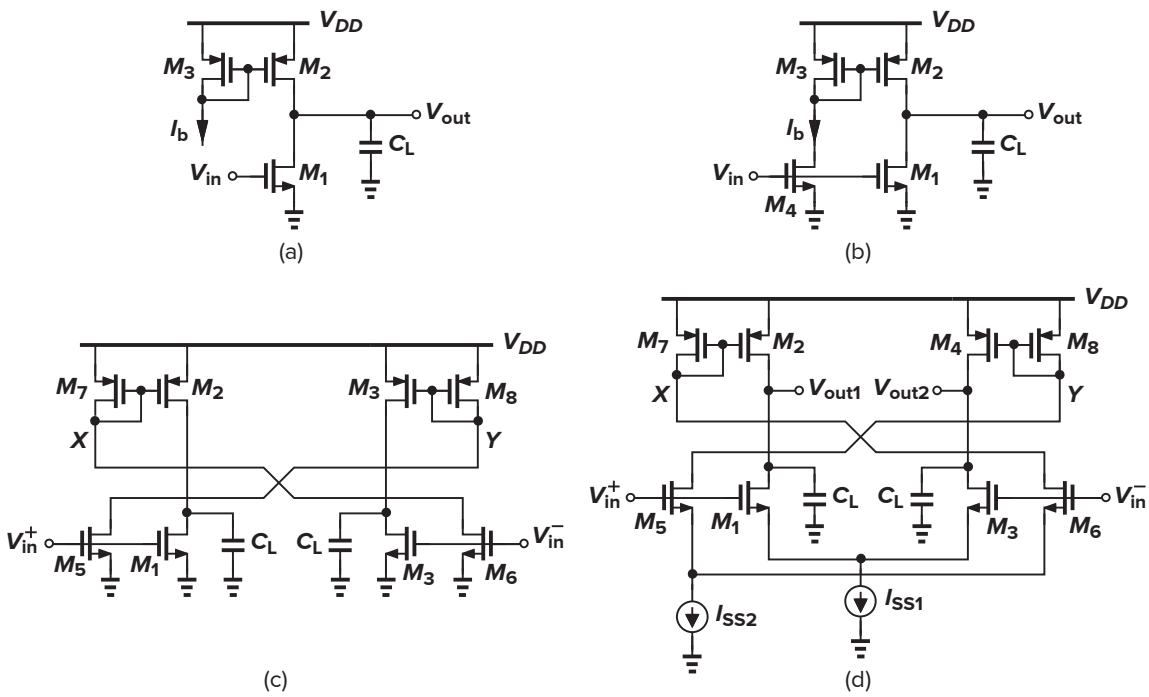

Figure 9.79 (a) CS stage with current mirror biasing, (b) injection of signal into the mirror with incorrect polarity, (c) injection of signal into the mirror with ccrrect polarity, and (d) addition of tail current sources.

By virtue of the temporary boost in the slew rate, such circuits alleviate the trade-off between the speed and the average power consumption.

In order to improve the input common-mode rejection, we add tail current sources to M_1 and M_3 and to M_5 and M_6 [Fig. 9.79(d)]. We now wish to calculate the circuit's slew rate with a large input step. If, for example, V_{in}^+ jumps up and M_1 and M_5 absorb all of their respective tail currents, then M_2 is off and V_{out1} falls at a rate of I_{SS1}/C_L while M_3 is off and V_{out2} rises at a rate of $I_{SS2}(W_4/W_8)/C_L$ (if $L_4 = L_8$). The differential slew rate is thus equal to $[I_{SS1} + I_{SS2}(W_4/W_8)]/C_L$. Without the push-pull action, on the other hand, this slew rate would be limited to I_{SS1}/C_L. If we choose W_4/W_8 equal to, say, 5 and I_{SS2} equal to I_{SS1}, then the SR increases by a factor of 6 with a twofold power penalty.[9]

▶ Example 9.24

Calculate the small-signal voltage gain of the class-AB op amp shown in Fig. 9.79(d).

Solution

In addition to the main path, the mirror path contributes gain as well. Since the mirror action amplifies the drain currents of M_5 and M_6 by a factor of W_4/W_8, we approximate the gain in this path as $(W_4/W_8)g_{m5}(r_{O3}||r_{O4})$ and add it to that of the main path:

$$|A_v| \approx g_{m1}(r_{O3}||r_{O4}) + (W_4/W_8)g_{m5}(r_{O3}||r_{O4}) \tag{9.72}$$

$$\approx [g_{m1} + (W_4/W_8)g_{m5}](r_{O3}||r_{O4}) \tag{9.73}$$

The mirror path thus raises the apparent transconductance from g_{m1} to $g_{m1} + (W_4/W_8)g_{m5}$.

◀

[9] One can argue that the fixed tail currents no longer allow class-AB operation, but we disregard this subtlety for now.

Let us now determine the transfer function of the above circuit and examine the effect of the mirror pole. We write the transfer function from the input through the mirror path to the output as

$$H_{mirr}(s) = \frac{W_4}{W_8} g_{m5}(r_{O3}||r_{O4}) \frac{1}{1+\dfrac{s}{\omega_{p,X}}} \frac{1}{1+\dfrac{s}{\omega_{out}}} \tag{9.74}$$

where $\omega_{p,X} \approx g_{m8}/C_Y$ and $\omega_{out} = [(r_{O3}||r_{O4})C_L]^{-1}$. For the main path, we simply have

$$H_{main}(s) = g_{m1}(r_{O3}||r_{O4}) \frac{1}{1+\dfrac{s}{\omega_{out}}} \tag{9.75}$$

It follows that

$$H_{tot}(s) = H_{main}(s) + H_{mirr}(s) \tag{9.76}$$

$$= \frac{r_{O3}||r_{O4}}{1+\dfrac{s}{\omega_{out}}} \left[\frac{W_4}{W_8} \frac{g_{m5}}{1+\dfrac{s}{\omega_{p,X}}} + g_{m1} \right] \tag{9.77}$$

$$= \frac{r_{O3}||r_{O4}}{1+\dfrac{s}{\omega_{out}}} \cdot \frac{(W_4/W_8)g_{m5} + g_{m1} + g_{m1}s/\omega_{p,X}}{1+\dfrac{s}{\omega_{p,X}}} \tag{9.78}$$

As seen in other examples in Chapter 6, the presence of the additional signal path leads to a zero in the transfer function. This zero frequency is given by

$$|\omega_z| = \left(\frac{W_4}{W_8} \frac{g_{m5}}{g_{m1}} + 1 \right) \omega_{p,X} \tag{9.79}$$

Unfortunately, it is not possible to equate ω_z to $\omega_{p,X}$ because $(W_4/W_8)(g_{m5}/g_{m1})$ is typically around unity or higher. Also, in practice, $\omega_{out} < \omega_{p,X}$.

It is tempting to raise the SR in Fig. 9.79(d) by increasing W_4/W_8, but we must note that, as a result, the pole frequency associated with the mirror nodes falls. Approximating this pole by g_{m8}/C_Y and writing $g_{m8} = \sqrt{I_{SS2}\mu_n C_{ox}(W/L)_8}$ and $C_Y \approx 2(W_4 + W_8)LC_{ox} + C_{DB8} + C_{DB5}$, we recognize that the mirror pole frequency is inversely proportional to W_4.

9.10.2 Two-Stage Op Amps

In order to achieve a high slew rate, we can apply push-pull operation to the second stage of a two-stage op amp. To this end, we view the arrangement shown in Fig. 9.79(c) as the second stage and precede it with a differential pair, arriving at the topology depicted in Fig. 9.80. This circuit provides a voltage gain of

$$|A_v| = g_{m9}(r_{O9}||r_{O11})[g_{m1} + (W_4/W_8)g_{m5}](r_{O1}||r_{O2}) \tag{9.80}$$

But how about the slew rate? Suppose, for example, V_{in1} and V_{in2} experience a large differential step such that the entire I_{SS} flows through node P. If this node is "agile" enough, i.e., if its capacitance is relatively small, V_P rises rapidly, applying a large overdrive to M_1 and M_5 and creating a high slew rate at the output. In other words, since V_P (or V_Q) can reach near V_{DD} when only M_9 (or M_{10}) is on, the available current is much larger than the bias current of the output stage. This behavior stands in contrast to that

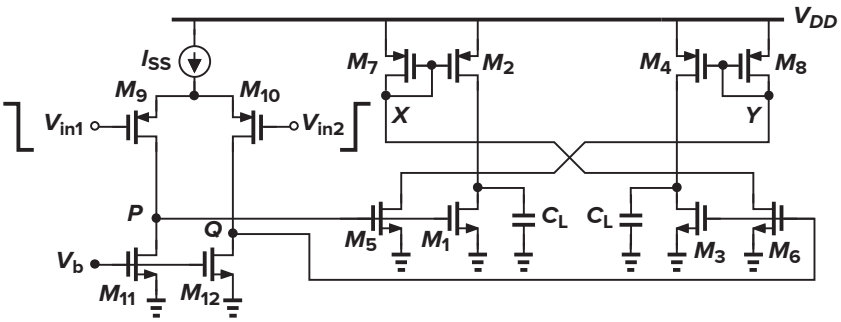

Figure 9.80 Two-stage op amp with slew enhancement.

of the circuit in Fig. 9.79(d), where the available current is a multiple of the tail currents and cannot be raised further "upon demand."

We return to this two-stage op amp in Chapter 10 and analyze its slew rate in the presence of frequency compensation.

9.11 ■ Power Supply Rejection

As with other analog circuits, op amps are often supplied from noisy lines and must therefore "reject" the noise adequately. For this reason, it is important to understand how noise on the supply manifests itself at the output of an op amp.

Let us consider the simple op amp shown in Fig. 9.81, assuming that the supply voltage varies slowly. If the circuit is perfectly symmetric, $V_{out} = V_X$. Since the diode-connected device "clamps" node X to V_{DD}, V_X and hence V_{out} experience approximately the same change as does V_{DD}. In other words, the gain from V_{DD} to V_{out} is close to unity. The power supply rejection ratio (PSRR) is defined as the gain from the input to the output divided by the gain from the supply to the output. At low frequencies:

$$\text{PSRR} \approx g_{mN}(r_{OP} \| r_{ON}) \tag{9.81}$$

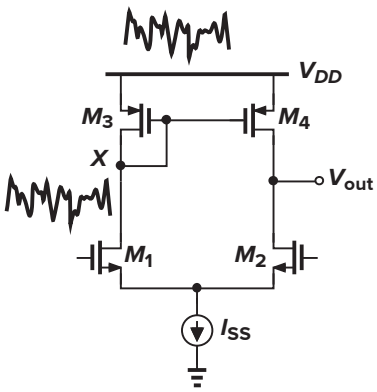

Figure 9.81 Supply rejection of differential pair with active current mirror.

▶ **Example 9.25**

Calculate the low-frequency PSRR of the feedback circuit shown in Fig. 9.82(a).