NFC TAG BOARD

29/04/2026

Variant: [No Variations]

REV. A

Material: -

RELEASED 29-APR-26

Page	Index	Page	Index	Page	Index	Page	Index
1	*COVER PAGE*	11		21		31	
2		12		22		32	
3		13		23		33	
4		14		24		34	
5		15		25		35	
6		16		26		36	
7		17		27		37	
8		18		28		38	
9		19		29		39	
10		20		30		40	

DESIGN CONSIDERATIONS

DESIGN NOTE:
Example text for informational design notes.

DESIGN NOTE:
Example text for cautionary design notes.

DESIGN NOTE:
Example text for debug notes.

DESIGN NOTE:
Example text for critical design notes.

LAYOUT NOTE:
Example text for critical layout guidelines.

TOP VIEW

BOTTOM VIEW

TITLE			
NFC TAG BOARD			
DATE	REVISION	DRAWN BY	PAGE
29/04/2026	A	Luca Schenetti	1 OF 2

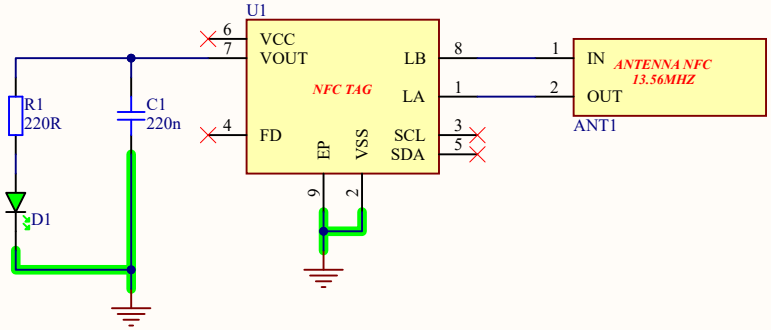

TITLE			
NFC TAG BOARD			
DATE	REVISION	DRAWN BY	PAGE
29/04/2026	A	Luca Schenetti	2 OF 2