DC - Approved Building Consent Document - BC230326-Amendment 1 - Pg 1 of 61 - 29/09/2023 - steven.burnham

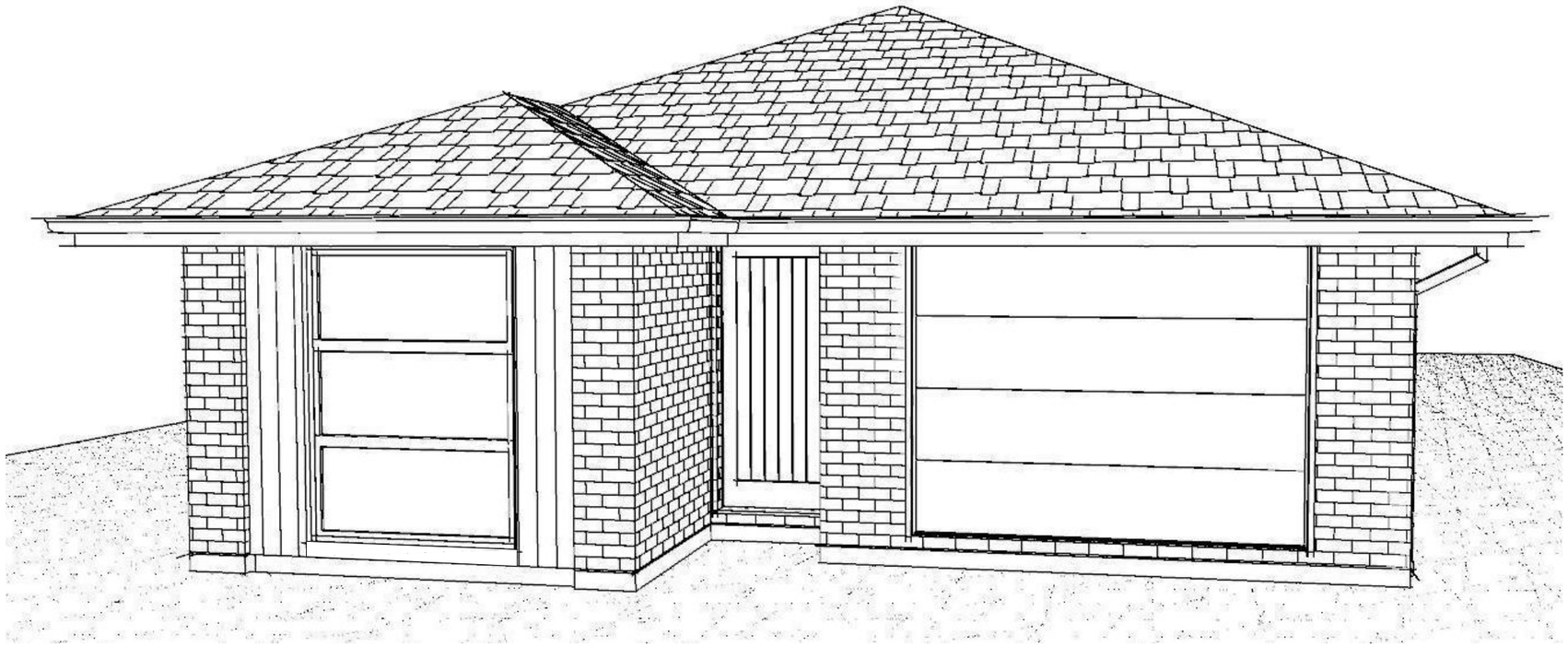

Contents:

Sheet 1 :	Cover Sheet
Sheet 2 :	Site Plan
Sheet 3 :	Floor Plan
Sheet 4 :	Elevations
Sheet 5 :	Elevations
Sheet 6 :	Cross Sections
Sheet 7 :	Roof Plan
Sheet 8 :	Set Out Dimensions
Sheet 9 :	Foundation Plan
Sheet 10 :	RibRaft Plan
Sheet 11 :	Drainage Plan
Sheet 12 :	Bracing Plan
Sheet 13 :	Lighting Plan
Sheet 14 :	Framing Details
Sheet 15 :	Framing Details
Sheet 16 :	Construction Details
Sheet 17 :	Construction Details
Sheet 18 :	Construction Details
Sheet 19 :	Construction Details
Sheet 20 :	Construction Details
Sheet 21 :	Bathroom Details
Sheet 22 :	Plumbing Details
Sheet 23 :	Truss Design
Sheet 24 :	Truss Design

All dimensions are to be check and confirmed prior to any construction
Plans are to be read in conjunction with Specifications and all supporting documentation

Signature HOMES Est. 1983
YOUR HOME. YOUR WAY.

TKR Homes Ltd.
31 Watts Road, Sockburn
PO BOX 11 351
Christchurch 8443

P: +64 3 342 7788

These drawings are limited to and by the extent of the detail covered in the drawings to meet the current New Zealand Building Code (NZBC). Where detail it required for construction and to demonstrate compliance with the current NZBC, a specific request should be made for the required detail to be supplied. No liability will be accepted for any detail or construction not covered in these drawings and/or carried out by persons other than the designer producing these documents.

Ismael & Rachel Pascual
Lot 620, DP 581780
41 Jean Batten Lane
Acland Park, Rolleston

Job Number:	Original Plan:	Sheet Name:	CONSENT PLANS	Sheet No.:
172973	***Kingfisher***	**COVER PAGE**		**1**

Sales:	Drawn:	QS:	Print Date:	Scale:
L Sevalle	**M Glynn**	**W Xian**	**21/09/2023**	**@ A3**

No.	Date:	Reason:
1	09-03-2023	Initial Consent Plans
2	21-09-2023	Consent Amendment

of 24 sheets

© Copyright: Signature Homes Limited 2012

CDC - Approved Building Consent Document - BC230326-Amendment 1 - Pg 2 of 61 - 29/09/2023 - steven.burnham

JEAN BATTEN LANE

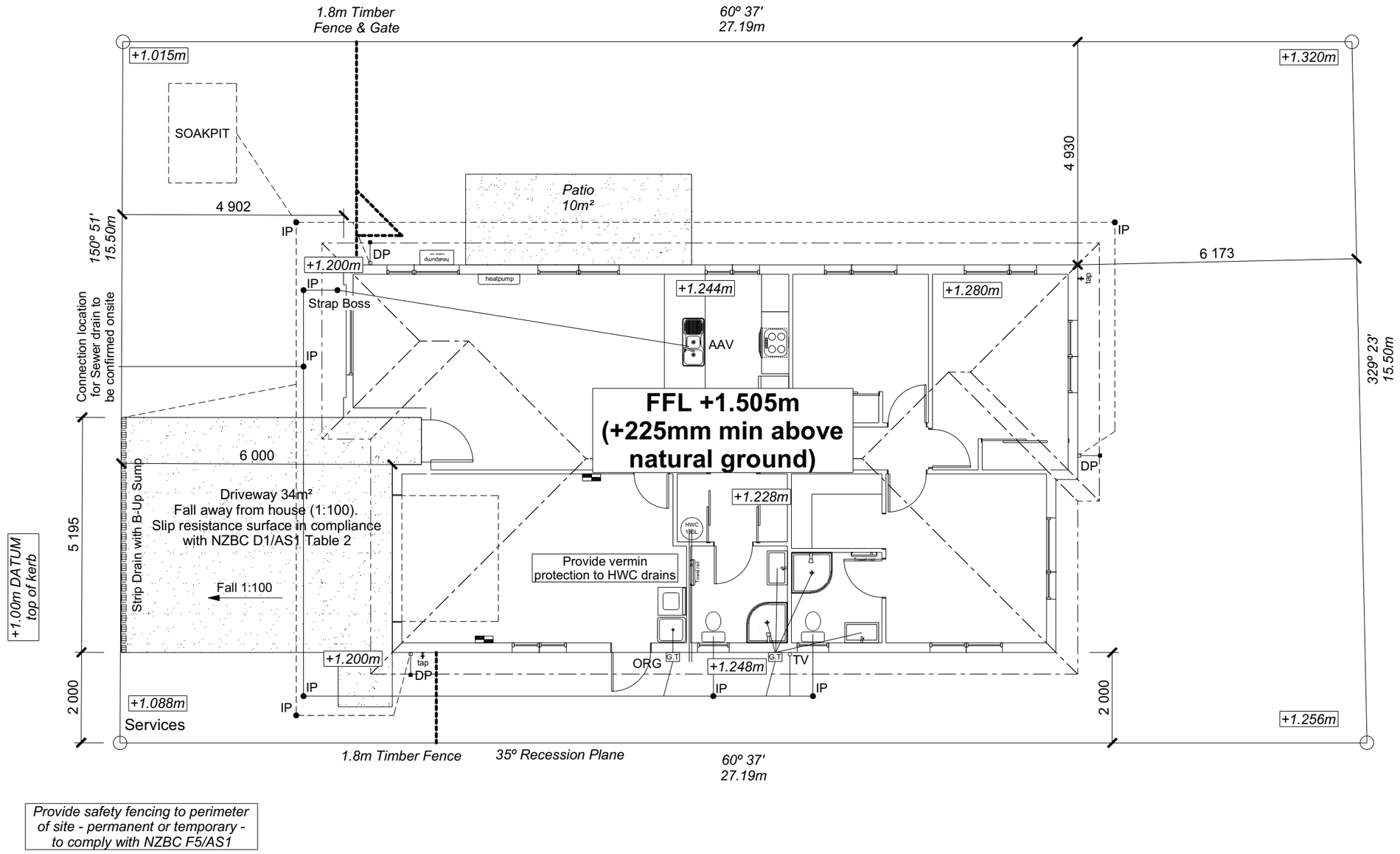

Provide safety fencing to perimeter of site - permanent or temporary - to comply with NZBC F5/AS1

SITE INFORMATION

Site Area :	424m²
Floor Area (veneer) :	130.77m² / 30.84%
Roof Area :	156.47m² / 36.90%
Wind	High
Earthquake	2
Exposure	B
Snow	N 4 at 50m (up to 1kPa)

Note: The dimensions shown are from cladding to boundary. Refer to sheet 8 for foundation to boundary dimensions.

Sediment control and site safety requirements are noted in the attached Specifications.

DRAINAGE LEGEND

- - - - - - - -	Stormwater DN100mm uPVC
————	Sewer Drain DN100mm uPVC
DP	Downpipe
GT	Gully Trap
ORG	Overflow Relief Gully
TV	Terminal Vent
AAV	Air Admittance Valve
IP	Inspection Point

DRAWING NOTES

These drawings are subject to copyright and remain the property of Signature Homes Ltd.

Verify all dimensions, sizes and levels on site prior to commencing any work. Any discrepancies are to be confirmed with Signature Homes Ltd.

Refer to attached Specifications for further information.

All work is to comply with the NZBC Acceptable Solutions, NZS 3604:2011 and Local Authority bylaws.

All dimensions are to be check and confirmed prior to any construction
Plans are to be read in conjunction with Specifications and all supporting documentation

Signature HOMES Est. 1983 — YOUR HOME. YOUR WAY.

TKR Homes Ltd.
31 Watts Road, Sockburn
PO BOX 11 351
Christchurch 8443

P: +64 3 342 7788

These drawings are limited to and by the extent of the detail covered in the drawings to meet the current New Zealand Building Code (NZBC). Where detail it required for construction and to demonstrate compliance with the current NZBC, a specific request should be made for the required detail to be supplied. No liability will be accepted for any detail or construction not covered in these drawings and/or carried out by persons other than the designer producing these documents.

Ismael & Rachel Pascual
Lot 620, DP 581780
41 Jean Batten Lane
Acland Park, Rolleston

Job Number:	Original Plan:	Sheet Name:	Sheet No.:
172973	***Kingfisher***	**SITE PLAN**	**2** of 24 sheets

Sales:	Drawn:	QS:	Print Date:	Scale:
L Sevalle	**M Glynn**	**W Xian**	**21/09/2023**	**1:100 @ A3**

CONSENT PLANS

No.	Date:	Reason:
1	09-03-2023	Initial Consent Plans
2	21-09-2023	Consent Amendment

© Copyright: Signature Homes Limited 2012

SDC - Approved Building Consent Document - BC230326-Amendment 1 - Pg 3 of 61 - 29/09/2023 - steven.burnham

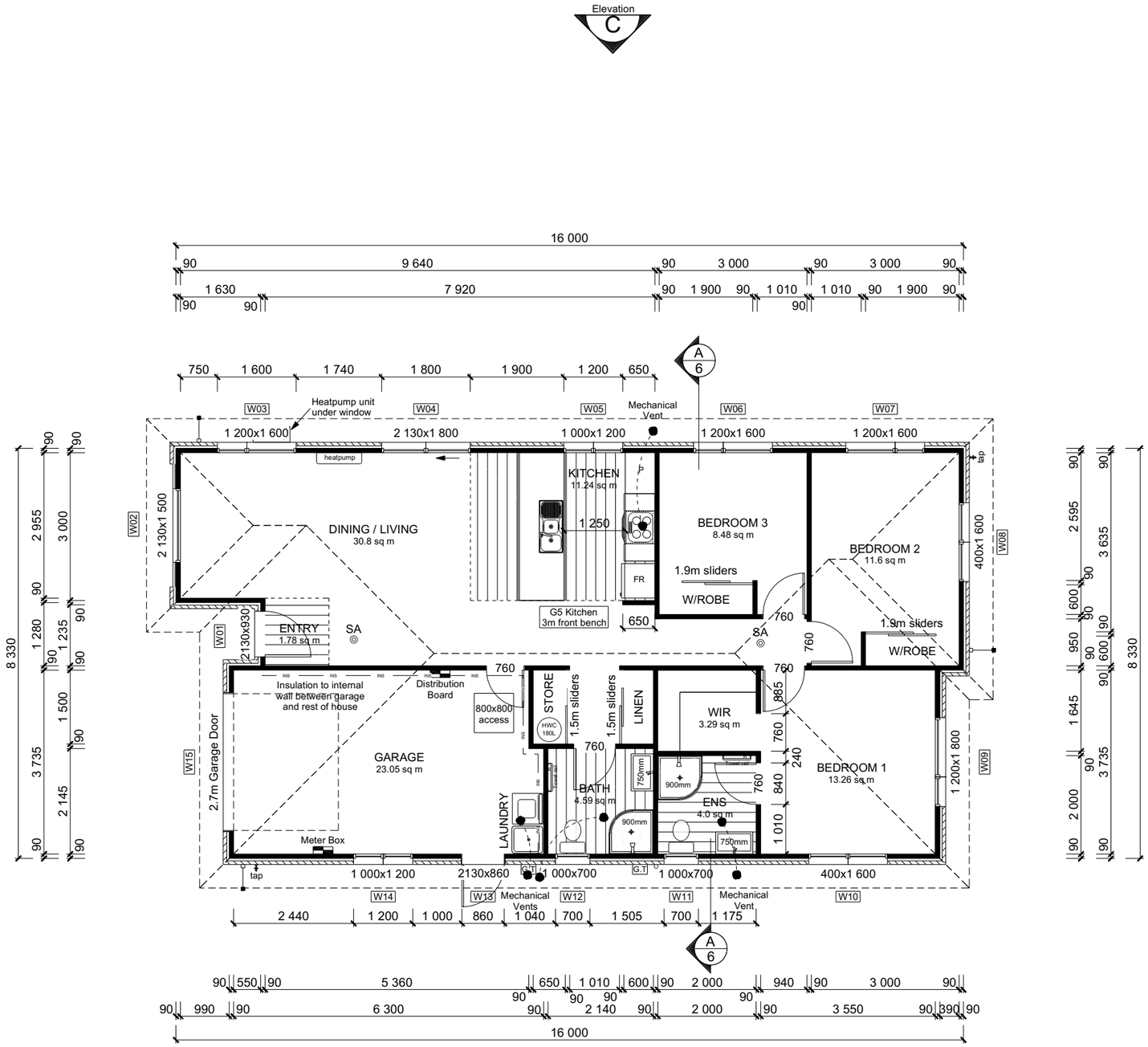

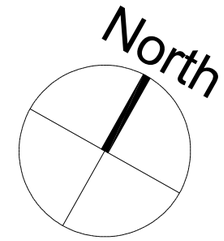

ROOF & WALL CLADDINGS

Roof : 25º Pressed Metal Tiles
Walls : 70 Series Brick Veneer
with a 50mm cavity
James Hardie Vert. Linea Oblique
with a 20mm cavity

DWELLING AREAS

Framing Area: 125.01m² (Perimeter: 49.94m)
Veneer Area: 130.77m² (Perimeter: 51.14m)
Roof Area: 156.47m² (Perimeter: 53.46m)

SMOKE ALARMS (hush type)
Domestic Smoke Alarms to be fitted within 3.0m of sleeping areas and on Escape routes, as indicated on plan. To comply with one of the following standards: UL 217, ULC-S531, AS 3786, BS 5446 (part 1).

FLOOR PLAN NOTES

Dimensions shown are to the frame,
GIB thickness not shown.
Mechanical ventilation to comply with G4/AS1
Air Seals to have PEF rod & low expansion foam
All windows and doors centered in room unless shown otherwise
Laundering facilities provided complying with G2/SA1 1.0
Provide sealant under skirting and paint to concrete around tub & W/M fixtures

WALL FRAMING
Stud Height: 2400 mm
(2455mm to u/s of bottom chord)

FLOOR FINISHES
Carpet & Vinyl

KITCHEN HOB
Electric Hobs

DOORS
Internal Height: 1980mm (leaves)
Leaf widths as shown on the plan (R/O +80mm)
Type: Hollow core flush panel
Front Door Type: Latitude Aluminium

WINDOW JOINERY
Low-E Double glazed aluminum
Standard single glazing to Garage

INTERNAL TRIMS
Scotia: 50mm GIB Coving (Excluding Garage)
Skirting: 60x12mm Pine, single bevel edge
Architrave: N/A

SHELVING
Shelf & Rails to all wardrobes
4 shelves to Linen cupboard

DRAWING NOTES

These drawings are subject to copyright and remain the property of Signature Homes Ltd.

Verify all dimensions, sizes and levels on site prior to commencing any work. Any discrepancies are to be confirmed with Signature Homes Ltd.

Refer to attached Specifications for further information.

All work is to comply with the NZBC Acceptable Solutions, NZS 3604:2011 and Local Authority bylaws.

All dimensions are to be check and confirmed prior to any construction
Plans are to be read in conjunction with Specifications and all supporting documentation

Signature HOMES Est. 1983
YOUR HOME. YOUR WAY.

TKR Homes Ltd.
31 Watts Road, Sockburn
PO BOX 11 351
Christchurch 8443

P: +64 3 342 7788

These drawings are limited to and by the extent of the detail covered in the drawings to meet the current New Zealand Building Code (NZBC). Where detail it required for construction and to demonstrate compliance with the current NZBC, a specific request should be made for the required detail to be supplied. No liability will be accepted for any detail or construction not covered in these drawings and/or carried out by persons other than the designer producing these documents.

Ismael & Rachel Pascual
Lot 620, DP 581780
41 Jean Batten Lane
Acland Park, Rolleston

Job Number:	Original Plan:	Sheet Name:	Sheet No.:
172973	*Kingfisher*	**FLOOR PLAN**	**3** of 24 sheets

Sales:	Drawn:	QS:	Print Date:	Scale:
L Sevalle	**M Glynn**	**W Xian**	**21/09/2023**	**1:100 @ A3**

CONSENT PLANS

No.	Date:	Reason:
1	09-03-2023	Initial Consent Plans
2	21-09-2023	Consent Amendment

© Copyright: Signature Homes Limited 2012

CDC - Approved Building Consent Document - BC230326-Amendment 1 - Pg 4 of 61 - 29/09/2023 - steven.burnham

ROOF & WALL CLADDINGS

Roof : 25º Pressed Metal Tiles
Walls : 70 Series Brick Veneer with a 50mm cavity
James Hardie Vert. Linea Oblique with a 20mm cavity

ELEVATION LEGEND

SS	Safety Stays
SG	Safety Glass
MB	Meter Box
TV	Terminal Vent

ELEVATION NOTES

Gutter : Coloured Steel Quad Gutter
Fascia : Coloured Steel185 Fascia
Downpipes : Colorsteel Rectangular 75x55mm
Soffits : Hardiflex 4.5mm
Joinery : Low-E Double glazed aluminum

All egress points to have a maximum step down of 190mm.
Access routs to have slip resistance surface in compliance with NZBC D1/AS1 Table 2 and to have a 1:100 fall away from the building

BUILDING ENVELOPE RISK MATRIX
ELEVATION A

RISK CRITERIA	RISK	SCORE
Wind Zone	High	1
Number of Stories	Low	0
Roof Wall Junction	Low	0
Eaves Width	Medium	1
Building Envelope	Low	0
Decks & Balconies	Low	0
Total		2

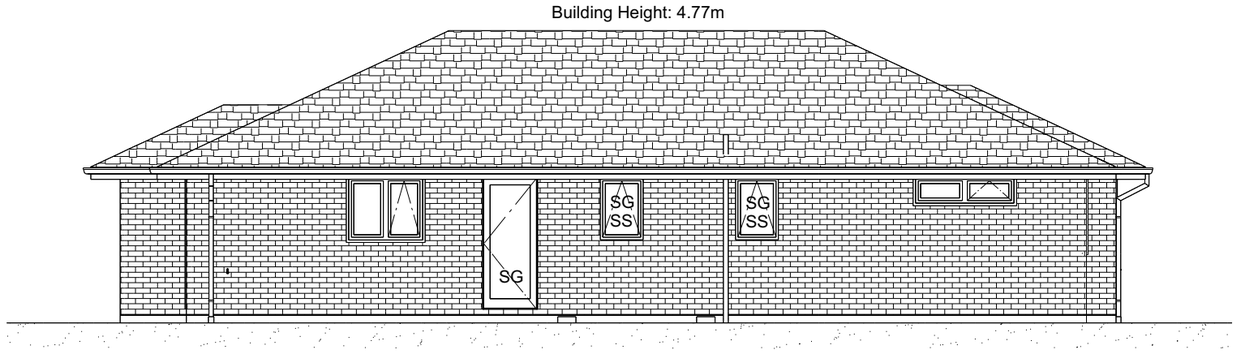

ELEVATION A

BUILDING ENVELOPE RISK MATRIX
ELEVATION B

RISK CRITERIA	RISK	SCORE
Wind Zone	High	1
Number of Stories	Low	0
Roof Wall Junction	Low	0
Eaves Width	Medium	1
Building Envelope	Low	0
Decks & Balconies	Low	0
Total		2

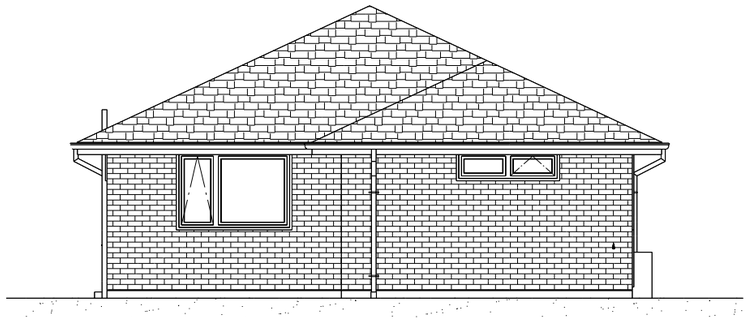

ELEVATION B

All dimensions are to be check and confirmed prior to any construction
Plans are to be read in conjunction with Specifications and all supporting documentation

Signature HOMES Est. 1983 — YOUR HOME. YOUR WAY.

TKR Homes Ltd.
31 Watts Road, Sockburn
PO BOX 11 351
Christchurch 8443

P: +64 3 342 7788

These drawings are limited to and by the extent of the detail covered in the drawings to meet the current New Zealand Building Code (NZBC). Where detail it required for construction and to demonstrate compliance with the current NZBC, a specific request should be made for the required detail to be supplied. No liability will be accepted for any detail or construction not covered in these drawings and/or carried out by persons other than the designer producing these documents.

Ismael & Rachel Pascual
Lot 620, DP 581780
41 Jean Batten Lane
Acland Park, Rolleston

Job Number:	Original Plan:	Sheet Name:
172973	***Kingfisher***	**ELEVATIONS**

Sales:	Drawn:	QS:	Print Date:	Scale:
L Sevalle	**M Glynn**	**W Xian**	**21/09/2023**	**1:100 @ A3**

CONSENT PLANS

No.	Date:	Reason:
1	09-03-2023	Initial Consent Plans
2	21-09-2023	Consent Amendment

Sheet No.: **4** of 24 sheets

© Copyright: Signature Homes Limited 2012

CDC - Approved Building Consent Document - BC230326-Amendment 1 - Pg 5 of 61 - 29/09/2023 - steven.burnham

ROOF & WALL CLADDINGS

Roof : 25º Pressed Metal Tiles
Walls : 70 Series Brick Veneer with a 50mm cavity
James Hardie Vert. Linea Oblique with a 20mm cavity

ELEVATION LEGEND

SS	Safety Stays
SG	Safety Glass
MB	Meter Box
TV	Terminal Vent

ELEVATION NOTES

Gutter : Coloured Steel Quad Gutter
Fascia : Coloured Steel185 Fascia
Downpipes : Colorsteel Rectangular 75x55mm
Soffits : Hardiflex 4.5mm
Joinery : Low-E Double glazed aluminum

All egress points to have a maximum step down of 190mm.
Access routs to have slip resistance surface in compliance with NZBC D1/AS1 Table 2 and to have a 1:100 fall away from the building

BUILDING ENVELOPE RISK MATRIX
ELEVATION C

RISK CRITERIA	RISK	SCORE
Wind Zone	High	1
Number of Stories	Low	0
Roof Wall Junction	Low	0
Eaves Width	Medium	1
Building Envelope	Low	0
Decks & Balconies	Low	0
Total		2

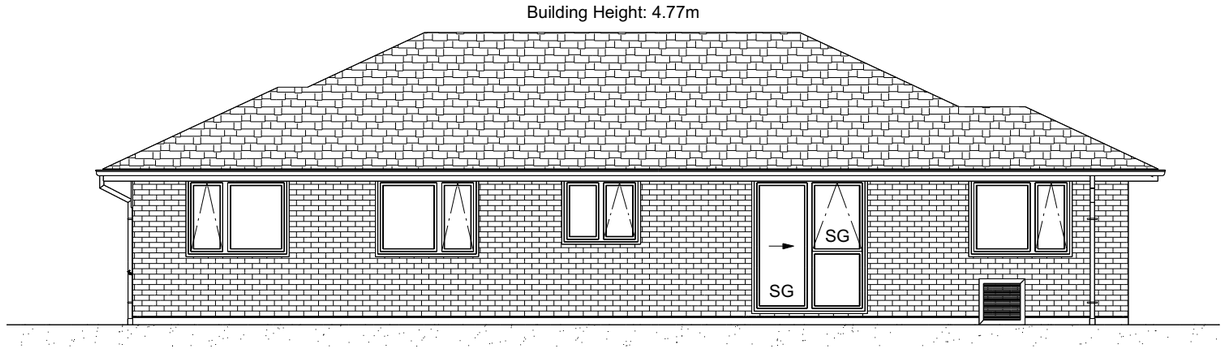

ELEVATION C

BUILDING ENVELOPE RISK MATRIX
ELEVATION D

RISK CRITERIA	RISK	SCORE
Wind Zone	High	1
Number of Stories	Low	0
Roof Wall Junction	Low	0
Eaves Width	Medium	1
Building Envelope	Medium	1
Decks & Balconies	Low	0
Total		3

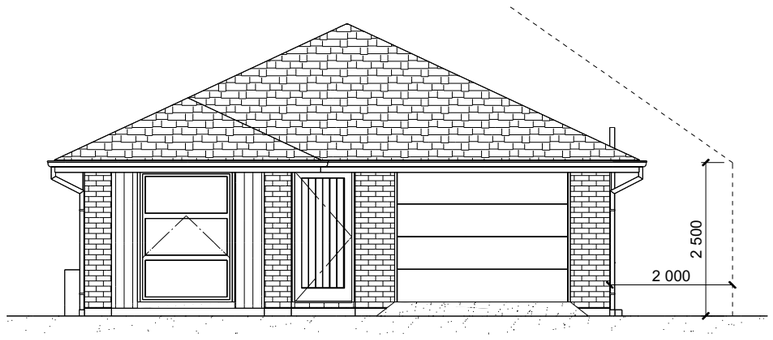

ELEVATION D

All dimensions are to be check and confirmed prior to any construction
Plans are to be read in conjunction with Specifications and all supporting documentation

YOUR HOME. YOUR WAY.

TKR Homes Ltd.
31 Watts Road, Sockburn
PO BOX 11 351
Christchurch 8443

P: +64 3 342 7788

These drawings are limited to and by the extent of the detail covered in the drawings to meet the current New Zealand Building Code (NZBC). Where detail it required for construction and to demonstrate compliance with the current NZBC, a specific request should be made for the required detail to be supplied. No liability will be accepted for any detail or construction not covered in these drawings and/or carried out by persons other than the designer producing these documents.

Ismael & Rachel Pascual
Lot 620, DP 581780
41 Jean Batten Lane
Acland Park, Rolleston

Job Number:	Original Plan:	Sheet Name:
172973	***Kingfisher***	**ELEVATIONS**

Sales:	Drawn:	QS:	Print Date:	Scale:
L Sevalle	**M Glynn**	**W Xian**	**21/09/2023**	**1:100 @ A3**

CONSENT PLANS

No.	Date:	Reason:
1	09-03-2023	Initial Consent Plans
2	21-09-2023	Consent Amendment

Sheet No.: **5** of 24 sheets

© Copyright: Signature Homes Limited 2012

SDC - Approved Building Consent Document - BC230326-Amendment 1 - Pg 6 of 61 - 29/09/2023 - steven.burnham

ROOF & WALL CLADDINGS

Roof : 25º Pressed Metal Tiles
Walls : 70 Series Brick Veneer with a 50mm cavity
James Hardie Vert. Linea Oblique with a 20mm cavity

CROSS SECTION NOTES

Building wrap is to comply with E2/AS1 & NZS 3604:2011.
Flashing materials must be selected based on environmental exposure. Refer to NZS 3604:2011 & table 20 of E2/AS1.
Flashing tape must have proven compatibility with the selected wrap & other materials with which it comes into contract as per table 21 of E2/AS1.
Fixings shall comply with NZS 3604:2011 Section 4 Durability Tables 4.1-4.3
Unless stated otherwise, timber members on drawings are to be a minimum of SG8 strength graded as per NZS3604:2011.

Joinery : Low-E Double glazed aluminum

INSULATION
Ceiling: Pink Batts R3.6 Ceiling Batts
Wall: Pink Batts R 2.6 Wall Batts

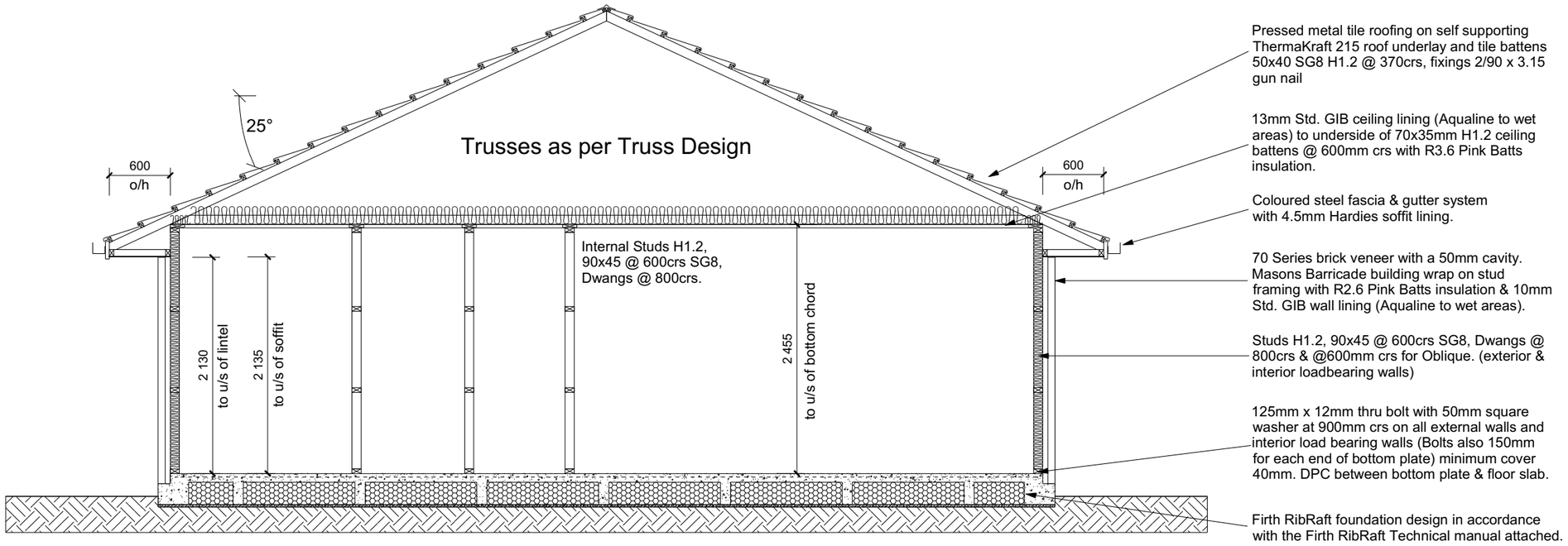

CROSS SECTION A-A

DRAWING NOTES

These drawings are subject to copyright and remain the property of Signature Homes Ltd.

Verify all dimensions, sizes and levels on site prior to commencing any work. Any discrepancies are to be confirmed with Signature Homes Ltd.

Refer to attached Specifications for further information.

All work is to comply with the NZBC Acceptable Solutions, NZS 3604:2011 and Local Authority bylaws.

All dimensions are to be check and confirmed prior to any construction
Plans are to be read in conjunction with Specifications and all supporting documentation

Signature HOMES Est. 1983 — YOUR HOME. YOUR WAY.

TKR Homes Ltd.
31 Watts Road, Sockburn
PO BOX 11 351
Christchurch 8443

P: +64 3 342 7788

These drawings are limited to and by the extent of the detail covered in the drawings to meet the current New Zealand Building Code (NZBC). Where detail it required for construction and to demonstrate compliance with the current NZBC, a specific request should be made for the required detail to be supplied. No liability will be accepted for any detail or construction not covered in these drawings and/or carried out by persons other than the designer producing these documents.

Ismael & Rachel Pascual
Lot 620, DP 581780
41 Jean Batten Lane
Acland Park, Rolleston

Job Number:	Original Plan:	Sheet Name:	Sheet No.:
172973	***Kingfisher***	**CROSS SECTIONS**	**6** of 24 sheets

Sales:	Drawn:	QS:	Print Date:	Scale:
L Sevalle	**M Glynn**	**W Xian**	**21/09/2023**	**1:50 @ A3**

CONSENT PLANS

No.	Date:	Reason:
1	09-03-2023	Initial Consent Plans
2	21-09-2023	Consent Amendment

© Copyright: Signature Homes Limited 2012

SDC - Approved Building Consent Document - BC230326-Amendment 1 - Pg 7 of 61 - 29/09/2023 - steven.burnham

Figure 29: Pipe penetration for masonry tile
Paragraph 8.2.7

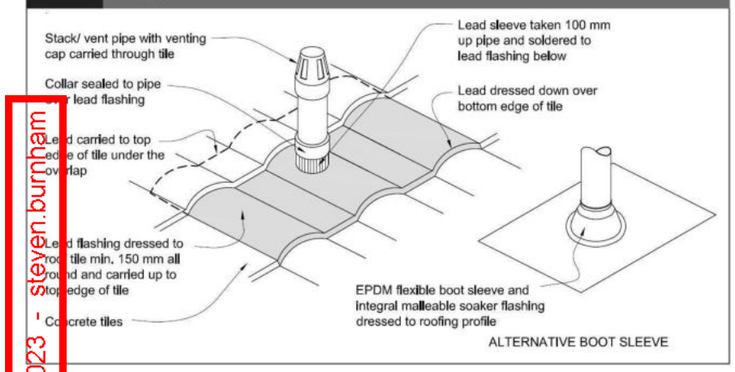

Metal Tile Penetration Detail
Scale NTS

- A pair of tensioned and crossed LUMBERLOK Strip Brace running continuously from ridge to top plate installed as detailed below.

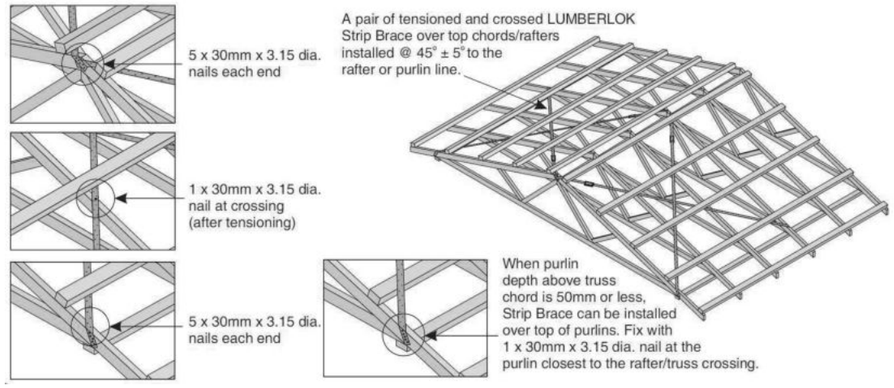

ROOF CLADDING

Roofing : 25º Pressed Metal Tiles
Tile Battens : 50x40 SG8 H1.2 @ 370crs, fixings 2/90 x 3.15 gun nail

ROOF PLAN NOTES

Gutter: Coloured Steel Quad Gutter
Fascia: Coloured Steel 185 Fascia
Downpipes: Colorsteel Rectangular 75x55mm
Soffits: Hardiflex 4.5mm

Underlay: Thermakraft 215 roof underlay

Roof Bracing: Diagonally opposed pair 25x1mm galv straps with 8Kn tension capacity.
After tensioning strap, fix to each rafter with 2/ 60x3.15mm nails.
Fold down strap and fix with 3/ 60x3.15mm nails each into the top chord and into the top plate.

Downpipes: 75x55 Rectangle Colorsteel
As per NZBC E1/AS1 Table 5 75x55 down pipes can collect up to 60m² of 0-25º roof plan area.

Use Coloured steel Quad Gutter
As per NZ Metal Roof and Wall Cladding Code of Practice Version 2 section 8 the above gutter with a cross sectional area of 5550mm² can collect up to 60m² of 0-25º roof plan area. Refer to the specifications for exact calculations.

Use Lumberlock top plate fixing chart attached to the main specifications to determine top plate fixings.

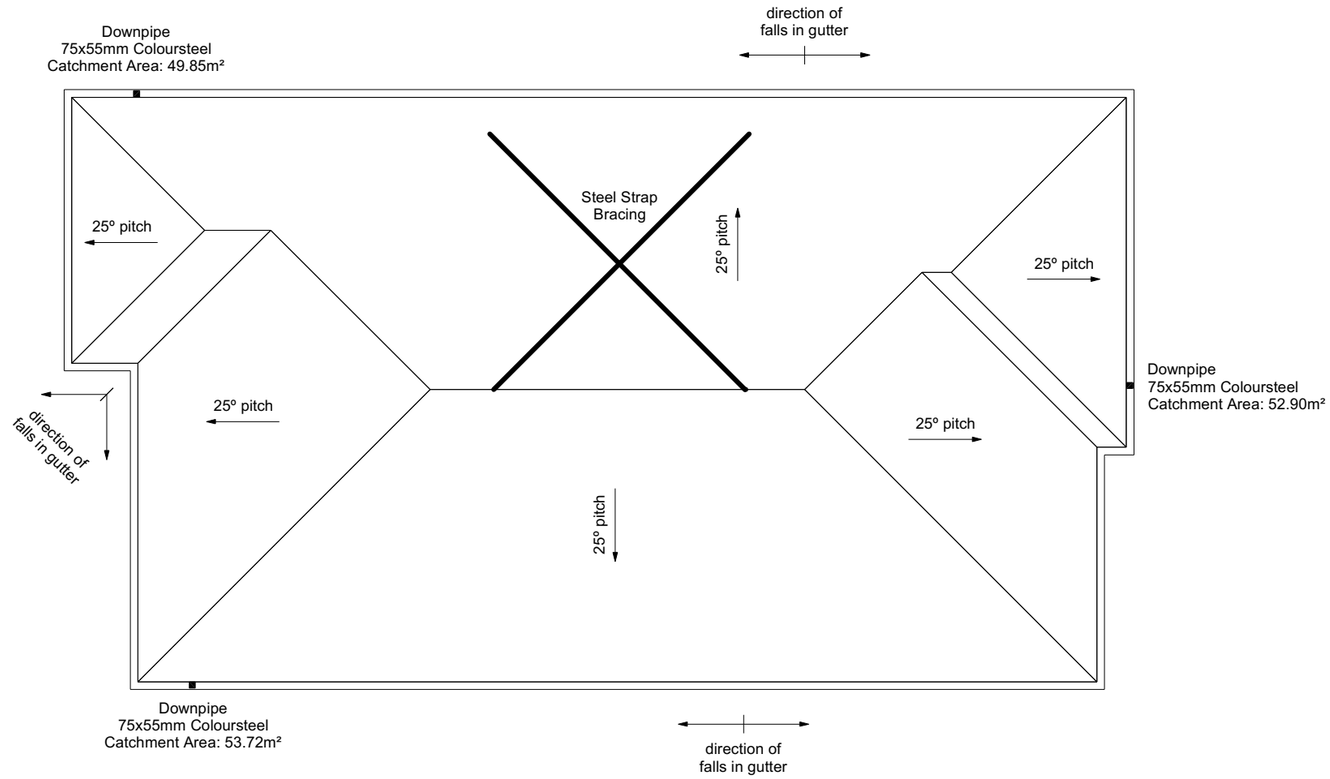

All dimensions are to be check and confirmed prior to any construction
Plans are to be read in conjunction with Specifications and all supporting documentation

Signature Homes Est. 1983 — YOUR HOME. YOUR WAY.

TKR Homes Ltd.
31 Watts Road, Sockburn
PO BOX 11 351
Christchurch 8443

P: +64 3 342 7788

These drawings are limited to and by the extent of the detail covered in the drawings to meet the current New Zealand Building Code (NZBC). Where detail it required for construction and to demonstrate compliance with the current NZBC, a specific request should be made for the required detail to be supplied. No liability will be accepted for any detail or construction not covered in these drawings and/or carried out by persons other than the designer producing these documents.

Ismael & Rachel Pascual
Lot 620, DP 581780
41 Jean Batten Lane
Acland Park, Rolleston

Job Number:	Original Plan:	Sheet Name:	Sheet No.:
172973	***Kingfisher***	**ROOF PLAN**	**7** of 24 sheets

Sales:	Drawn:	QS:	Print Date:	Scale:
L Sevalle	**M Glynn**	**W Xian**	**21/09/2023**	**1:100 @ A3**

CONSENT PLANS

No.	Date:	Reason:
1	09-03-2023	Initial Consent Plans
2	21-09-2023	Consent Amendment

© Copyright: Signature Homes Limited 2012

SDC - Approved Building Consent Document - BC230326-Amendment 1 - Pg 8 of 61 - 29/09/2023 - steven.burnham

SET OUT PLAN NOTES

All dimensions over foundation face. Allow (120mm rebate) 70mm veneer & 50mm cavity, Brick to overhang foundation face by 0-20mm max as per NZBC E2/AS1.
All reinforcing is to be Ductility Class E, in accordance with NZS 4671.
All concrete to comply with NZS3604:2011 Section 4 Durability Clause 4.5.2.

These foundations are design to the findings and recommendations in the site specific Geotech report.

JEAN BATTEN LANE

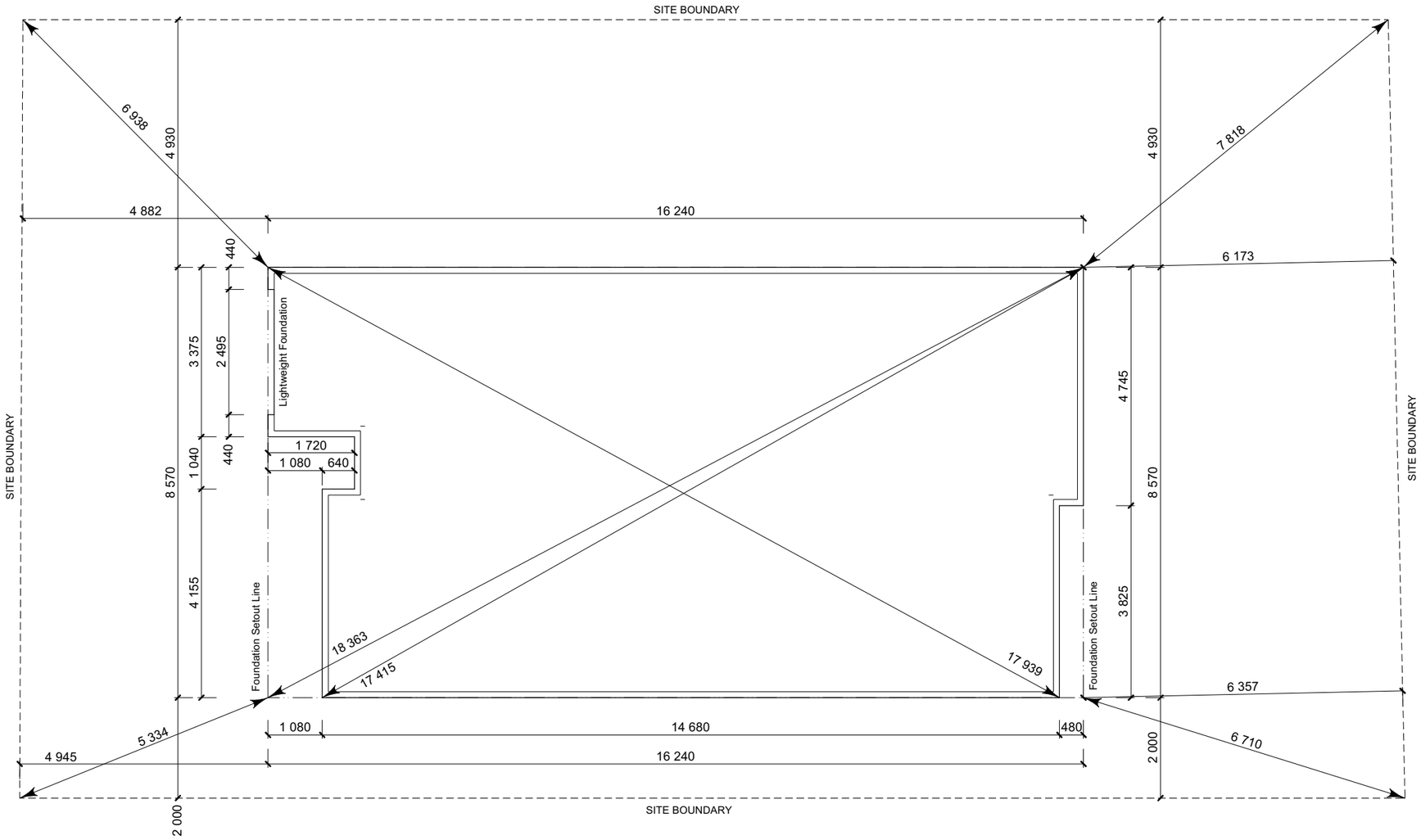

All dimensions are to be check and confirmed prior to any construction
Plans are to be read in conjunction with Specifications and all supporting documentation

Signature Homes — YOUR HOME. YOUR WAY.

TKR Homes Ltd.
31 Watts Road, Sockburn
PO BOX 11 351
Christchurch 8443

P: +64 3 342 7788

These drawings are limited to and by the extent of the detail covered in the drawings to meet the current New Zealand Building Code (NZBC). Where detail it required for construction and to demonstrate compliance with the current NZBC, a specific request should be made for the required detail to be supplied. No liability will be accepted for any detail or construction not covered in these drawings and/or carried out by persons other than the designer producing these documents.

Ismael & Rachel Pascual
Lot 620, DP 581780
41 Jean Batten Lane
Acland Park, Rolleston

Job Number:	Original Plan:	Sheet Name:	Sheet No.:
172973	***Kingfisher***	**SETOUT DIMENSIONS**	**8** of 24 sheets

Sales:	Drawn:	QS:	Print Date:	Scale:
L Sevalle	**M Glynn**	**W Xian**	**21/09/2023**	**1:100 @ A3**

CONSENT PLANS

No.	Date:	Reason:
1	09-03-2023	Initial Consent Plans
2	21-09-2023	Consent Amendment

© Copyright: Signature Homes Limited 2012

DC - Approved Building Consent Document - BC230326-Amendment 1 - Pg 9 of 61 - 29/09/2023 - steven.burnham

FOUNDATION PLAN NOTES

All dimensions over foundation face. Allow (120mm rebate) 70mm veneer & 50mm cavity, Brick to overhang foundation face by 0-20mm max as per NZBC E2/AS1.
W/C location indicated on plan has assumed a 140mm offset from internal frame line, please consult manufacturer's documentation to confirm offset.
Contractor to consult manufacturer's documentation to determine the correct location for all wastes positioned through floor slabs.
Earth bar to be bonded to the reinforcing mesh
Refer to Truss design for exact location of slab thickenings

All reinforcing is to be Ductility Class E, in accordance with NZS 4671.
All concrete to comply with NZS3604:2011 Section 4 Durability Clause 4.5.2.

These foundations are design to the findings and recommendations in the site specific Geotech report.

AREA TO PERIMETER RATIO

Foundation Area:	130.77m²
Perimeter:	51.14m
Ratio:	2.56

FFL +1.505m (+225mm min above natural ground)

United Steel [Wireplus] SE62Plus to entire slab

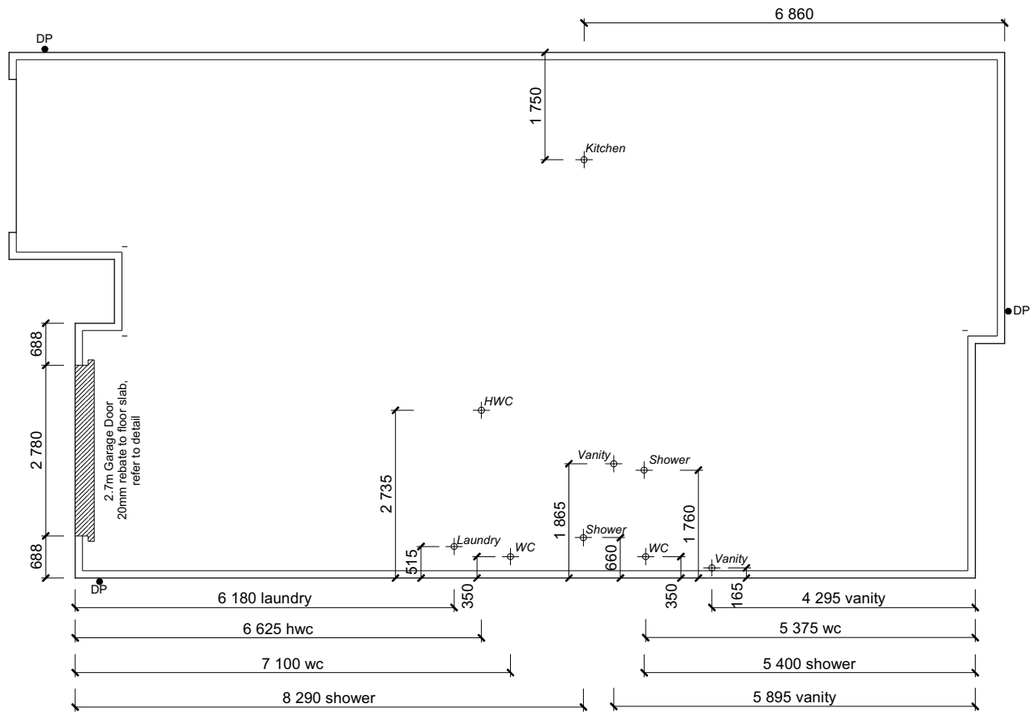

All dimensions are to be check and confirmed prior to any construction
Plans are to be read in conjunction with Specifications and all supporting documentation

Signature HOMES Est. 1983 — YOUR HOME. YOUR WAY.

TKR Homes Ltd.
31 Watts Road, Sockburn
PO BOX 11 351
Christchurch 8443

P: +64 3 342 7788

These drawings are limited to and by the extent of the detail covered in the drawings to meet the current New Zealand Building Code (NZBC). Where detail it required for construction and to demonstrate compliance with the current NZBC, a specific request should be made for the required detail to be supplied. No liability will be accepted for any detail or construction not covered in these drawings and/or carried out by persons other than the designer producing these documents.

Ismael & Rachel Pascual
Lot 620, DP 581780
41 Jean Batten Lane
Acland Park, Rolleston

Job Number:	Original Plan:	Sheet Name:	Sheet No.:
172973	***Kingfisher***	**FOUNDATION PLAN**	**9**

Sales:	Drawn:	QS:	Print Date:	Scale:
L Sevalle	**M Glynn**	**W Xian**	**21/09/2023**	**1:100 @ A3**

CONSENT PLANS

No.	Date:	Reason:
1	09-03-2023	Initial Consent Plans
2	21-09-2023	Consent Amendment

of 24 sheets

© Copyright: Signature Homes Limited 2012

PDC - Approved Building Consent Document - BC230326-Amendment 1 - Pg 10 of 61 - 29/09/2023 - steven.burnham

United Steel [Wireplus]
SE62Plus to entire slab

TC1 Firth RaftMix Concrete foundation design in accordance with the Firth RibRaft Technical Manual & Codemark attached.

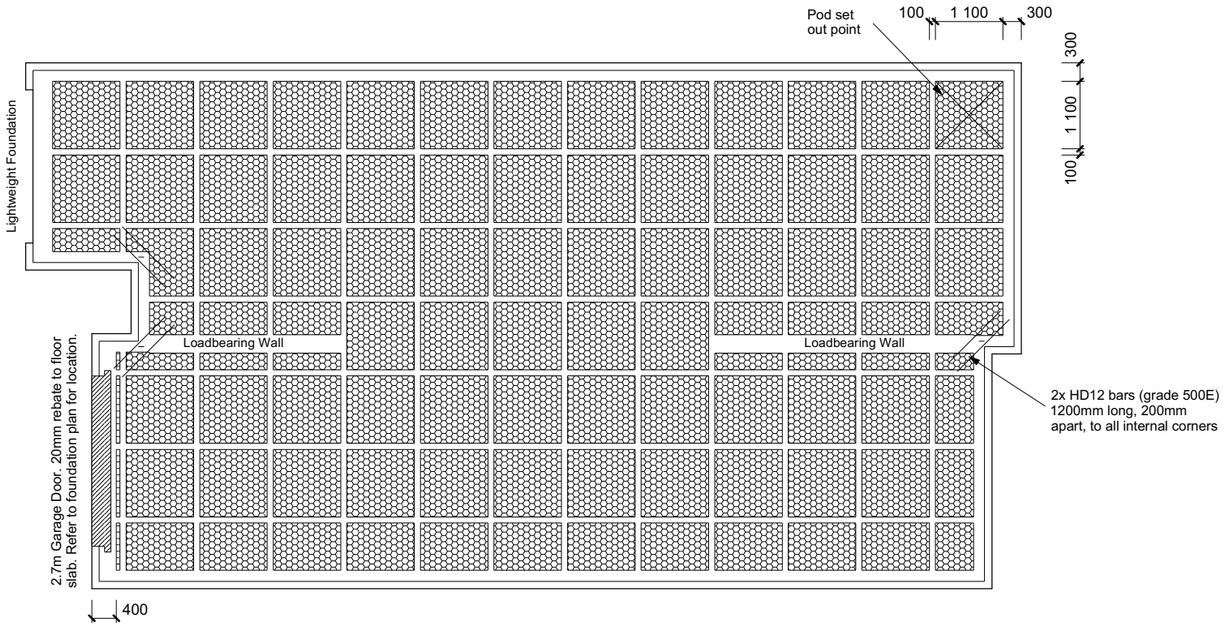

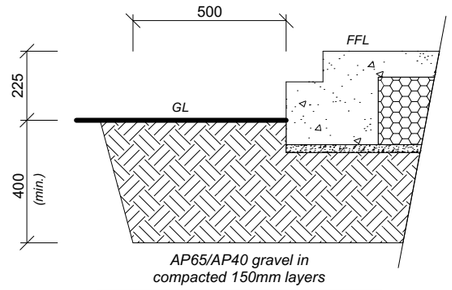

Refer to site specific geotech report by Kirk Roberts Consulting for full details

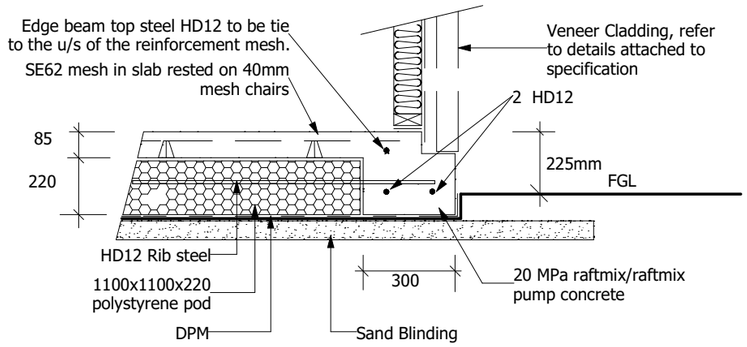

Ribraft Edgebeam Detail (Rebate) Scale 1:20

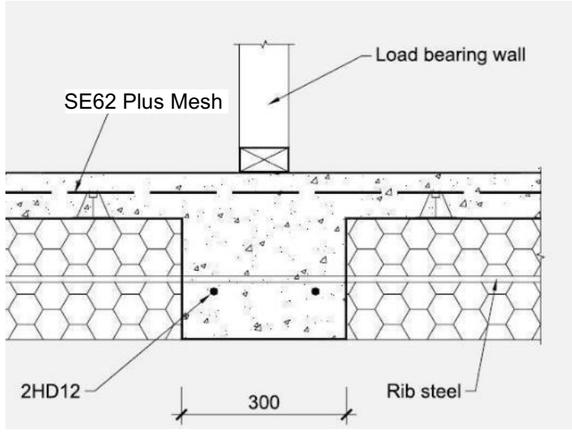

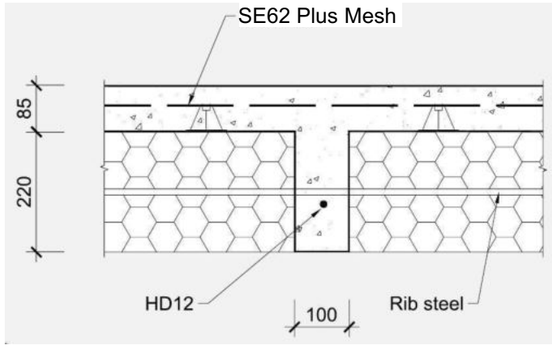

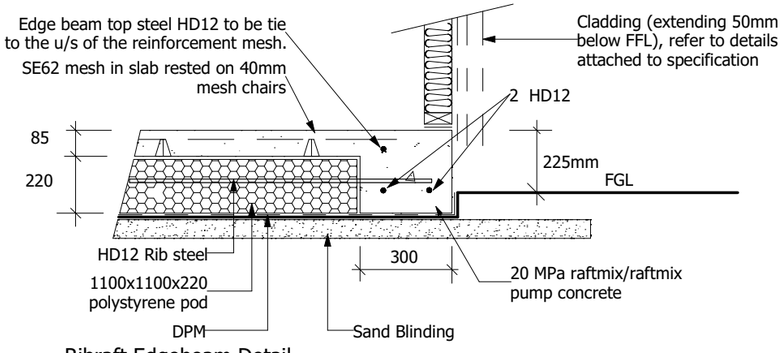

Ribraft Edgebeam Detail
Scale 1:20

All dimensions are to be check and confirmed prior to any construction
Plans are to be read in conjunction with Specifications and all supporting documentation

Signature HOMES Est. 1983 — YOUR HOME. YOUR WAY.

TKR Homes Ltd.
31 Watts Road, Sockburn
PO BOX 11 351
Christchurch 8443

P: +64 3 342 7788

These drawings are limited to and by the extent of the detail covered in the drawings to meet the current New Zealand Building Code (NZBC). Where detail it required for construction and to demonstrate compliance with the current NZBC, a specific request should be made for the required detail to be supplied. No liability will be accepted for any detail or construction not covered in these drawings and/or carried out by persons other than the designer producing these documents.

Ismael & Rachel Pascual
Lot 620, DP 581780
41 Jean Batten Lane
Acland Park, Rolleston

Job Number:	Original Plan:	Sheet Name:	Sheet No.:
172973	***Kingfisher***	**RIBRAFT PLAN**	**10** of 24 sheets

Sales:	Drawn:	QS:	Print Date:	Scale:
L Sevalle	**M Glynn**	**W Xian**	**21/09/2023**	**AS SHOWN @ A3**

CONSENT PLANS

No.	Date:	Reason:
1	09-03-2023	Initial Consent Plans
2	21-09-2023	Consent Amendment

© Copyright: Signature Homes Limited 2012

BDC - Approved Building Consent Document - BC230326-Amendment 1 - Pg 11 of 61 - 29/09/2023 - steven.burnham

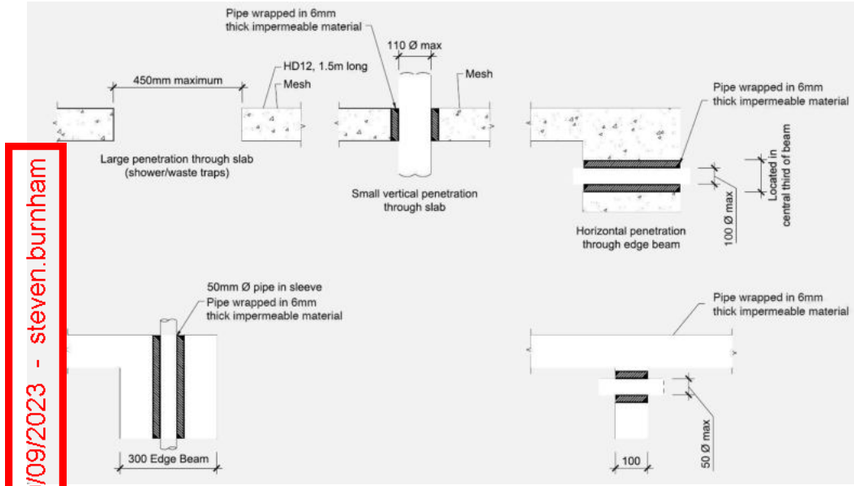

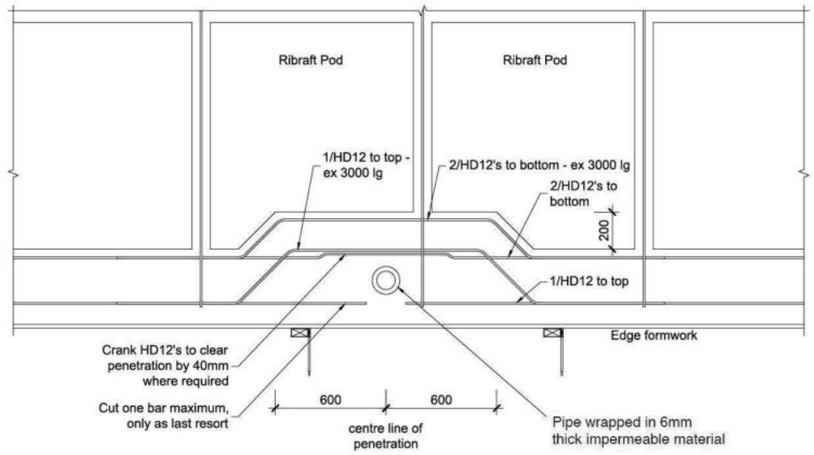

Plumbing Schedule	NZBC G13	
Kitchen		
Sink:	Ø50mm @1:40	(3 discharge units)
Bathrooms		
Vanity:	Ø40mm @ 1:40	(1 discharge units per basin)
Shower:	Ø40mm @1:40	(2 discharge units)
Bath:	Ø40mm @1:40	(4 discharge units)
WC:	Ø100mm @1:40	(4 discharge units)
Laundry Sink:	Ø40mm @1:30	(5 discharge units)
Drainage Schedule	NZBC G13	
Main Foulwater		
Vented Drain	Ø100mm @1:60	
Stormwater Drain	Ø100mm @1:60 (1:120max)	
Terminal Vent	Ø80mm	
Heatpump	Drain over DP	
ORG	Overflow Relief Gully	

Notes:
ORG to be positioned so the top of gully dish is no less than 150mm below overflow level of lowest fixture
Sewer and Stormwater to connect to existing connections.
All plumbing and drainage to comply with NZBC G13.
All drains passing through concrete, provide sleeve or wrap in durable and flexible to allow for expansion and contraction. (as per G13/AS2 5.8.1)
HWC: Safe tray to HWC with 50mm overflow drain to exterior to comply with G12/AS1.

DRAINAGE LEGEND

- - - - - - - -	Stormwater DN100mm uPVC
————	Sewer Drain DN100mm uPVC
DP	Downpipe
GT	Gully Trap
ORG	Overflow Relief Gully
TV	Terminal Vent
AAV	Air Admittance Valve
IP	Inspection Point

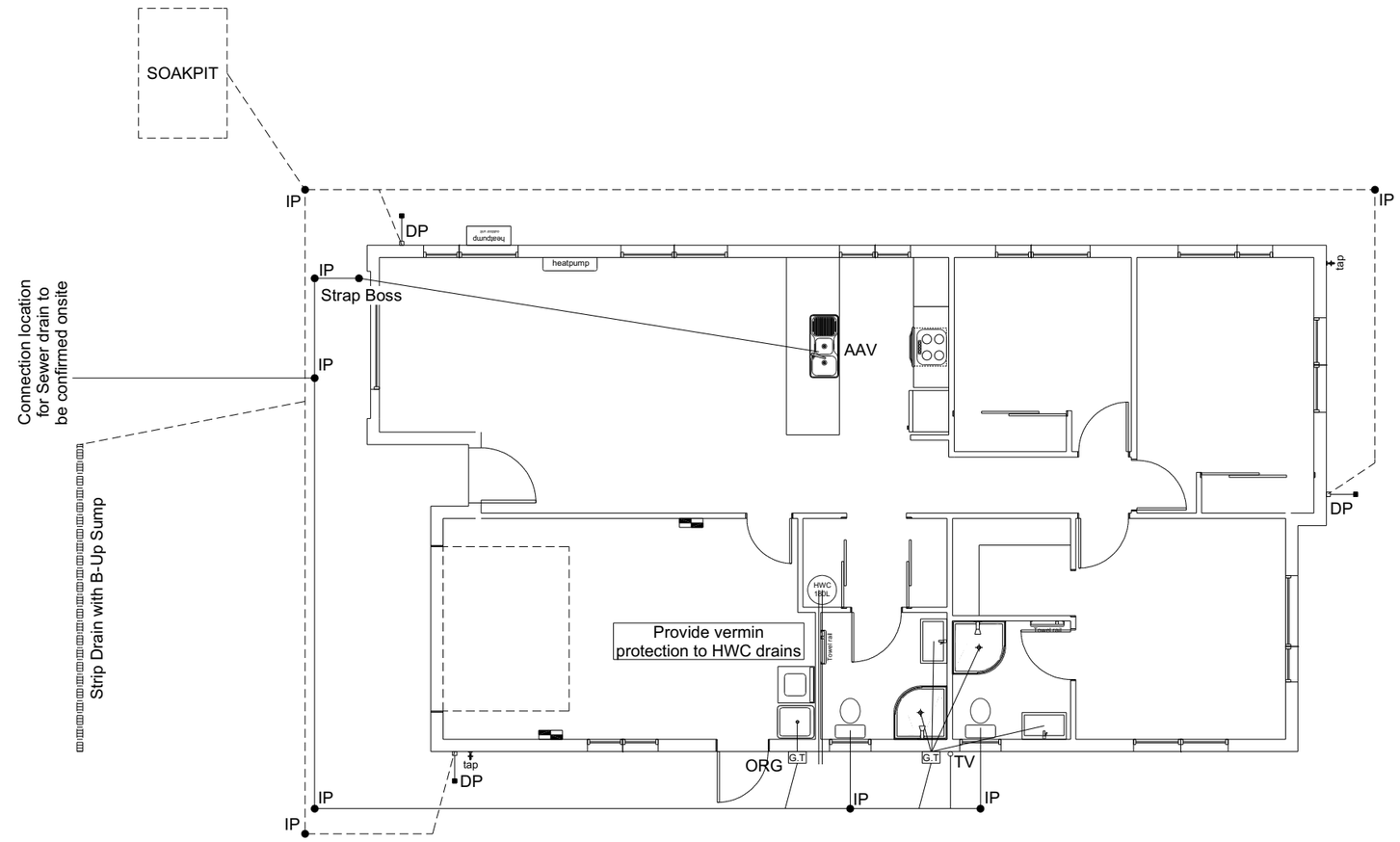

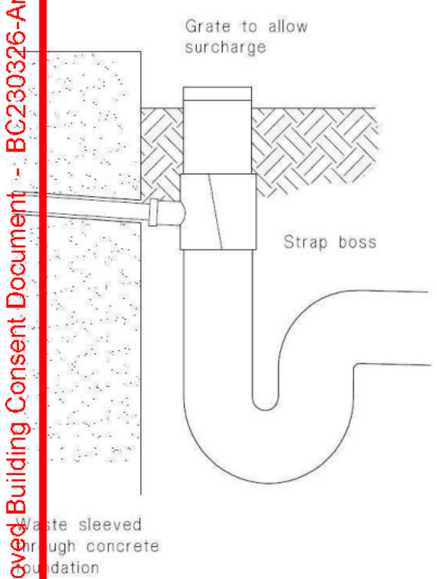

c) Strap boss to riser

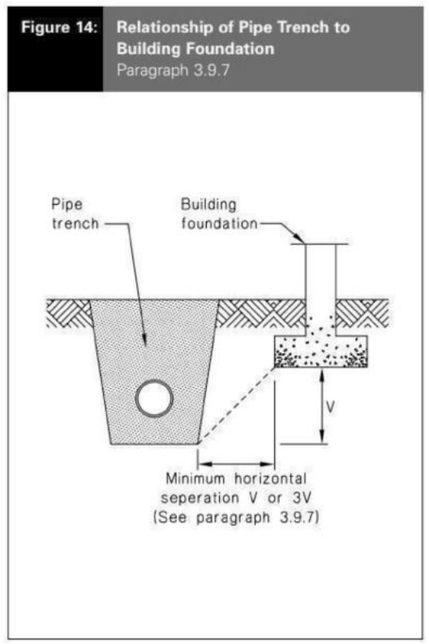

All dimensions are to be check and confirmed prior to any construction
Plans are to be read in conjunction with Specifications and all supporting documentation

Signature HOMES Est. 1983 — YOUR HOME. YOUR WAY.

TKR Homes Ltd.
31 Watts Road, Sockburn
PO BOX 11 351
Christchurch 8443

P: +64 3 342 7788

These drawings are limited to and by the extent of the detail covered in the drawings to meet the current New Zealand Building Code (NZBC). Where detail it required for construction and to demonstrate compliance with the current NZBC, a specific request should be made for the required detail to be supplied. No liability will be accepted for any detail or construction not covered in these drawings and/or carried out by persons other than the designer producing these documents.

Ismael & Rachel Pascual
Lot 620, DP 581780
41 Jean Batten Lane
Acland Park, Rolleston

Job Number:	Original Plan:	Sheet Name:	Sheet No.:
172973	***Kingfisher***	**DRAINAGE PLAN**	**11** of 24 sheets

Sales:	Drawn:	QS:	Print Date:	Scale:
L Sevalle	**M Glynn**	**W Xian**	**21/09/2023**	**1:100 @ A3**

CONSENT PLANS

No.	Date:	Reason:
1	09-03-2023	Initial Consent Plans
2	21-09-2023	Consent Amendment

© Copyright: Signature Homes Limited 2012

BDC - Approved Building Consent Document - BC220326-Amendment 1 - Pg 12 of 61 - 29/09/2023 - steven.burnham

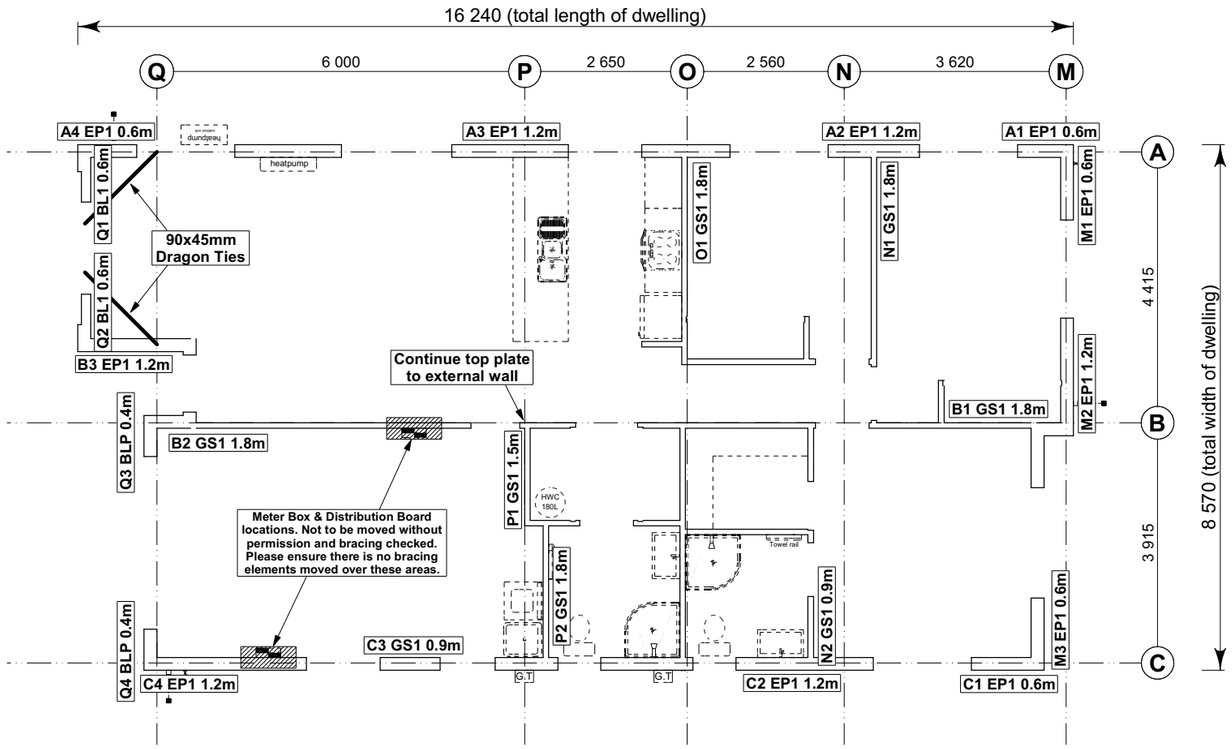

8.7.3.4

Each *wall* that contains one or more *wall bracing elements* shall be connected at the *top plate* level, either directly, or through a *framing* member in the line of the *wall*, to *external walls* at right angles to it. *Top plate* fixing(s) of the *capacity* in tension or compression along the line of the *wall bracing element* are given as follows:

(a) For each *wall* containing *wall bracing elements* with a total *bracing capacity* of not more than 125 *bracing units*: to at least one such *external wall* by a fixing as shown in figure 8.16 of 6 kN *capacity*;

(b) For each *wall* containing *wall bracing elements* with a total *bracing capacity* of not more than 250 *bracing units*: to at least 2 *external walls* by fixings as shown in figure 8.16 each of 6 kN *capacity*;

(c) For each *wall* containing *wall bracing elements* with a total *bracing capacity* of more than 250 *bracing units*: to at least 2 *external walls* by fixings as shown in figure 8.16 each having a rating of not less than 2.4 kN per 100 *bracing units*.

BRACING PLAN NOTES

Wall bracing designed in accordance with NZS 3604:2011 & GIB Ezybrace system
Refer to attached calculations.

Bracing Designed to:
Wind: High
Earthquake: 2

BRACING LEGEND

A ← Brace Line Label
A1 GS1 1.1m: Brace Length ← Brace Type ← Brace Number

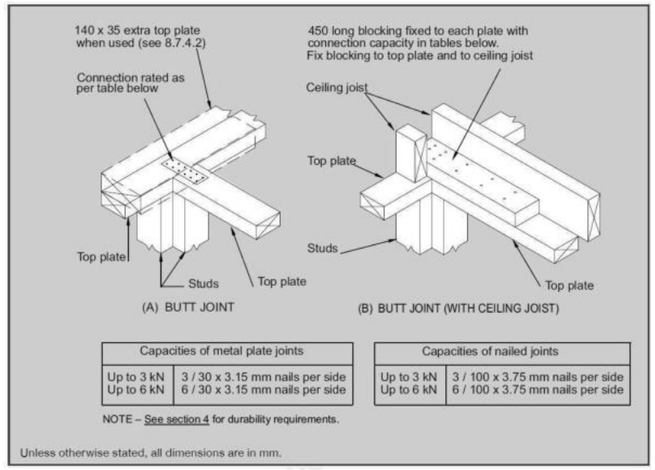

Figure 8.16 – Connecting top plates to external walls at right angles – Walls containing bracing (see 8.7.3.4)

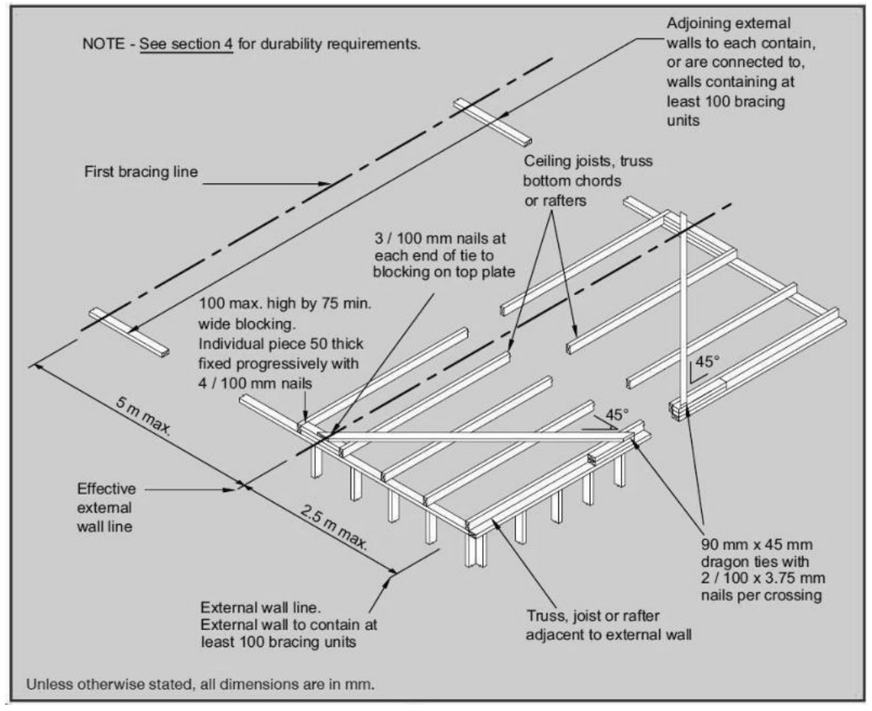

Single Level Along Resistance Sheet

Job Name: Ismael & Rachel Pascual

Line	Element	Length (m)	Angle (degrees)	Stud Ht. (m)	Type	Supplier	Wind (BUs)	EQ (BUs)	Wind	EQ
									Demand	
									437	782
									Achieved	
									1196	1268
									274%	162%
A	1	0.60		2.4	EP1 0.6	Ecoply®	57	63		
	2	1.20		2.4	EP1 1.2	Ecoply®	144	162		
	3	1.20		2.4	EP1 1.2	Ecoply®	144	162		
	4	0.60		2.4	EP1 0.6	Ecoply®	57	63		
									402 OK	450 OK
B	1	1.80		2.4	GS1-N	GIB®	124	108		
	2	1.80		2.4	GS1-N	GIB®	124	108		
	3	1.20		2.4	EP1 1.2	Ecoply®	144	162		
									392 OK	378 OK
C	1	0.60		2.4	EP1 0.6	Ecoply®	57	63		
	2	1.20		2.4	EP1 1.2	Ecoply®	144	162		
	3	0.90		2.4	GS1-N	GIB®	57	53		
	4	1.20		2.4	EP1 1.2	Ecoply®	144	162		
									402 OK	440 OK

Single Level Across Resistance Sheet

Job Name: Ismael & Rachel Pascual

Line	Element	Length (m)	Angle (degrees)	Stud Ht. (m)	Type	Supplier	Wind (BUs)	EQ (BUs)	Wind	EQ
									Demand	
									814	782
									Achieved	
									1006	985
									124%	126%
M	1	0.60		2.4	EP1 0.6	Ecoply®	57	63		
	2	1.20		2.4	EP1 1.2	Ecoply®	144	162		
	3	0.60		2.4	EP1 0.6	Ecoply®	57	63		
									258 OK	288 OK
N	1	1.80		2.4	GS1-N	GIB®	124	108		
	2	0.90		2.4	GS1-N	GIB®	57	53		
									181 OK	161 OK
O	1	1.80		2.4	GS1-N	GIB®	124	108		
									124 OK	108 OK
P	1	1.50		2.4	GS1-N	GIB®	104	90		
	2	1.80		2.4	GS1-N	GIB®	124	108		
									228 OK	198 OK
Q	1	0.60		2.4	BL1-H	GIB®	59	61		
	2	0.60		2.4	BL1-H	GIB®	59	61		
	3	0.40		2.4	BLP-H	GIB®	48	54		
	4	0.40		2.4	BLP-H	GIB®	48	54		
									215 OK	229 OK

All dimensions are to be check and confirmed prior to any construction
Plans are to be read in conjunction with Specifications and all supporting documentation

Signature HOMES Est. 1983 — YOUR HOME. YOUR WAY.

TKR Homes Ltd.
31 Watts Road, Sockburn
PO BOX 11 351
Christchurch 8443

P: +64 3 342 7788

These drawings are limited to and by the extent of the detail covered in the drawings to meet the current New Zealand Building Code (NZBC). Where detail it required for construction and to demonstrate compliance with the current NZBC, a specific request should be made for the required detail to be supplied. No liability will be accepted for any detail or construction not covered in these drawings and/or carried out by persons other than the designer producing these documents.

Ismael & Rachel Pascual
Lot 620, DP 581780
41 Jean Batten Lane
Acland Park, Rolleston

Job Number:	Original Plan:	Sheet Name:	Sheet No.:
172973	*Kingfisher*	**BRACING PLAN**	**12** of 24 sheets

Sales:	Drawn:	QS:	Print Date:	Scale:
L Sevalle	**M Glynn**	**W Xian**	**21/09/2023**	**1:100 @ A3**

CONSENT PLANS

No.	Date:	Reason:
1	09-03-2023	Initial Consent Plans
2	21-09-2023	Consent Amendment

© Copyright: Signature Homes Limited 2012

BSC - Approved Building Consent Document - BC230326-Amendment 1 - Pg 13 of 61 - 29/09/2023 - steven.burnham

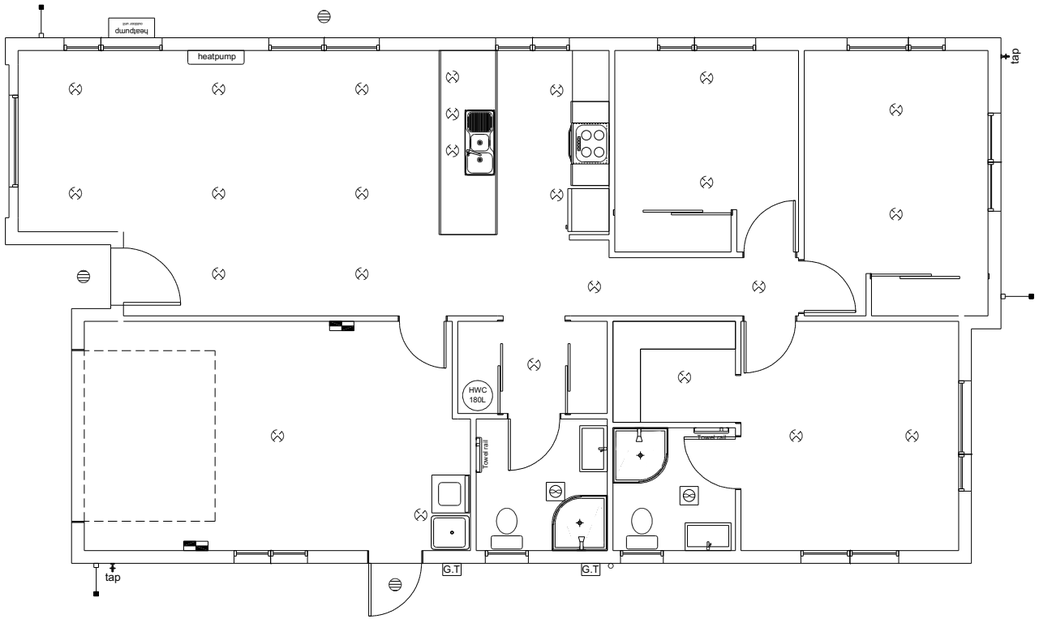

LEGEND

Refer to Electrical Section in Specification for further details

- Ceiling Pan
- CA Approved Down Light
- Exterior Bulkhead Light
- Exterior Wall Light
- Fluorescent Double
- Light Switch
- Two Way Light Switch
- Single Power Socket
- Double Power Socket
- Outside Waterproof Plug
- Telephone/Data Outlet
- TV — TV Jack
- SKY — Sky Connection
- Bathroom Heater
- Bathroom Extractor/Light

Electrical Plan in indicative only and is to be confirmed onsite with electrician and client

All dimensions are to be check and confirmed prior to any construction
Plans are to be read in conjunction with Specifications and all supporting documentation

Signature Homes Est. 1983 — YOUR HOME. YOUR WAY.

TKR Homes Ltd.
31 Watts Road, Sockburn
PO BOX 11 351
Christchurch 8443

P: +64 3 342 7788

These drawings are limited to and by the extent of the detail covered in the drawings to meet the current New Zealand Building Code (NZBC). Where detail it required for construction and to demonstrate compliance with the current NZBC, a specific request should be made for the required detail to be supplied. No liability will be accepted for any detail or construction not covered in these drawings and/or carried out by persons other than the designer producing these documents.

Ismael & Rachel Pascual
Lot 620, DP 581780
41 Jean Batten Lane
Acland Park, Rolleston

Job Number:	Original Plan:	Sheet Name:	Sheet No.:
172973	***Kingfisher***	**LIGHTING PLAN**	**13** of 24 sheets

Sales:	Drawn:	QS:	Print Date:	Scale:
L Sevalle	**M Glynn**	**W Xian**	**21/09/2023**	**1:100 @ A3**

CONSENT PLANS

No.	Date:	Reason:
1	09-03-2023	Initial Consent Plans
2	21-09-2023	Consent Amendment

© Copyright: Signature Homes Limited 2012

BC - Approved Building Consent Document - BC230326-Amendment 1 - Pg 14 of 61 - 29/09/2023 - steven.burnham

LUMBERLOK®

01/2017

LINTEL FIXING SCHEDULE

ALTERNATIVE TO TABLE 8.14 & FIGURE 8.12 NZS 3604:2011

NOTE:

- ★ All fixings are designed for vertical loads only. Dead loads include the roof weight and standard ceiling weight of 0.20kPa.
- ★ Refer to Table 8.19 NZS 3604:2011 for nailing schedule to resist horizontal loads.
- ★ These fixings assume the correct choice of rafter/truss to top plate connections have been made.
- ★ All fixings assume bottom plate thickness of 45mm maximum. Note: TYLOK options on timber species.
- ★ Wall framing arrangements under girder trusses are not covered in this schedule.
- ★ All timber selections are as per NZS 3604:2011.

DEFINITIONS

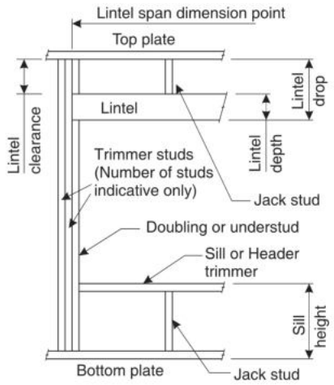

Lintel Supporting Girder Trusses						
Roof Tributary Area	Light Roof			Heavy Roof		
	Wind Zone			Wind Zone		
	L, M, H	VH	EH	L, M, H	VH	EH
8.6m²	G	G	H	G	G	H
11.6m²	G	H	H	G	G	H
12.1m²	G	H	H	G	H	H
15.3m²	H	H	-	G	H	H
19.1m²	H	-	-	G	H	-
20.9m²	H	-	-	H	H	-
21.8m²	H	-	-	H	-	-
34.3m²	-	-	-	H	-	-

NOTES:

1. Roof Tributary Area = approx. 1/2 x (Total roof area on girder and rafter trusses supported by lintel)
2. Assumed girder truss is at mid-span or middle third span of lintel
3. Use similar fixings for both ends of lintel
4. All other cases require specific engineering design

Lintel Span (m)	Loaded Dimension (m) (See Fig. 1.3 NZS 3604:2011)	Light Roof Wind Zone					Heavy Roof Wind Zone				
		L	M	H	VH	EH	L	M	H	VH	EH
1.0	2.0	E	E	E	F	F	E	E	E	E	F
	3.0	E	E	F	F	F	E	E	E	F	F
	4.0	E	F	F	F	G	E	E	F	F	F
	5.0	E	F	F	G	G	E	E	F	F	G
	6.0	E	F	F	G	G	E	E	F	F	G
1.2	2.0	E	E	F	F	F	E	E	E	F	F
	3.0	E	E	F	F	F	E	E	F	F	F
	4.0	E	F	F	G	G	E	E	F	F	G
	5.0	E	F	F	G	G	E	E	F	F	G
	6.0	F	F	G	G	H	E	E	F	G	G
1.5	2.0	E	E	F	F	F	E	E	E	F	F
	3.0	E	F	F	F	G	E	E	F	F	F
	4.0	E	F	F	G	G	E	E	F	F	G
	5.0	F	F	G	G	H	E	E	F	G	G
	6.0	F	F	G	H	H	E	E	F	G	H
2.0	2.0	E	F	F	F	G	E	E	F	F	F
	3.0	E	F	F	G	G	E	E	F	F	G
	4.0	F	F	G	G	H	E	E	F	G	G
	5.0	F	F	G	H	H	E	E	F	G	H
	6.0	F	G	G	H	H	E	F	G	H	H
2.4	2.0	E	F	F	G	G	E	E	F	F	G
	3.0	F	F	G	G	H	E	E	F	G	G
	4.0	F	F	G	H	H	E	E	F	G	H
	5.0	F	G	G	H	H	E	F	G	H	H
	6.0	F	G	H	H	-	E	F	G	H	H
3.0	2.0	E	F	F	G	G	E	E	F	F	G
	3.0	F	F	G	H	H	E	E	F	G	H
	4.0	F	G	G	H	H	E	F	G	H	H
	5.0	F	G	H	H	-	E	F	G	H	H
	6.0	F	G	H	-	-	E	F	G	H	-
3.6	2.0	F	F	G	G	H	E	E	F	G	G
	3.0	F	F	G	H	H	E	F	G	G	H
	4.0	F	G	H	H	-	E	F	G	H	H
	5.0	F	G	H	-	-	E	F	G	H	-
	6.0	G	H	H	-	-	E	F	H	-	-
4.2	2.0	F	F	G	G	H	E	E	F	G	G
	3.0	F	G	H	H	-	E	F	G	H	H
	4.0	F	G	H	-	-	E	F	G	H	-
	5.0	G	H	H	-	-	E	F	H	-	-
	6.0	G	H	-	-	-	E	F	H	-	-
4.5	2.0	F	F	G	H	H	E	E	F	G	H
	3.0	F	G	H	H	-	E	F	G	H	H
	3.4	F	G	H	H	-	E	F	G	H	H
	4.0	F	G	H	-	-	E	F	G	H	-
	5.0	G	H	-	-	-	E	F	H	-	-
	6.0	G	H	-	-	-	E	F	H	-	-
4.8	2.0	F	F	G	H	H	E	E	F	G	H
	3.0	F	G	H	H	-	E	F	G	H	H
	3.2	F	G	H	H	-	E	F	G	H	H
	4.0	F	G	H	-	-	E	F	H	H	-
	5.0	G	H	-	-	-	E	F	H	-	-
	6.0	G	H	-	-	-	E	F	H	-	-
5.1	2.0	F	F	G	H	H	E	F	G	G	H
	3.0	F	G	H	H	-	E	F	G	H	H
	3.5	F	G	H	-	-	E	F	G	H	-
	4.0	G	G	H	-	-	E	F	H	H	-
	5.0	G	H	-	-	-	E	F	H	-	-
	6.0	G	H	-	-	-	E	G	H	-	-
5.4	2.0	F	F	G	H	H	E	F	G	G	H
	2.8	F	G	H	H	-	E	F	G	H	H
	3.0	F	G	H	-	-	E	F	G	H	-
	4.0	G	H	H	-	-	E	F	H	-	-
	5.0	G	H	-	-	-	E	F	H	-	-
	6.0	G	H	-	-	-	E	G	H	-	-

LINTEL FIXING OPTIONS

LUMBERLOK®

TYPE E 1.4kN

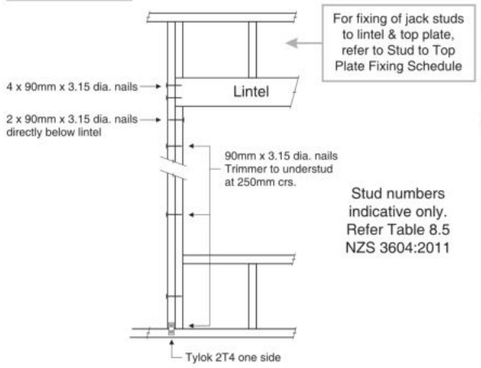

TYPE F 4.0kN

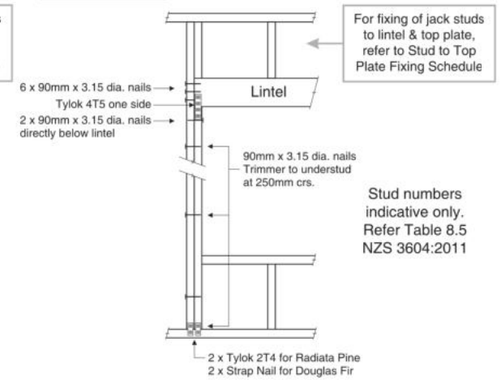

TYPE G 7.5kN

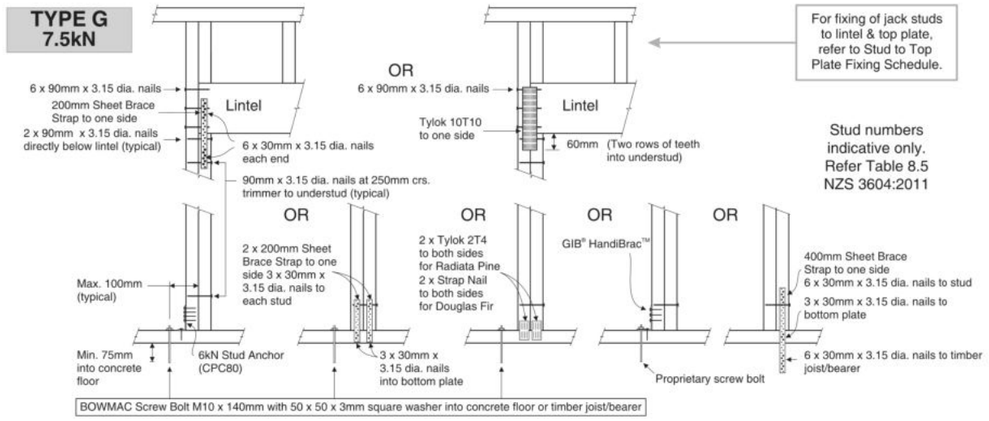

TYPE H 13.5kN

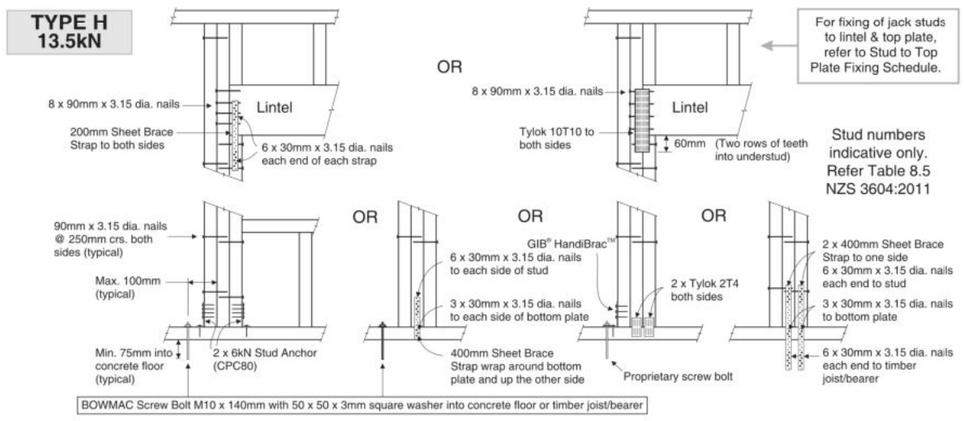

All dimensions are to be check and confirmed prior to any construction
Plans are to be read in conjunction with Specifications and all supporting documentation

Signature HOMES Est. 1983 — YOUR HOME. YOUR WAY.

TKR Homes Ltd.
31 Watts Road, Sockburn
PO BOX 11 351
Christchurch 8443

P: +64 3 342 7788

These drawings are limited to and by the extent of the detail covered in the drawings to meet the current New Zealand Building Code (NZBC). Where detail it required for construction and to demonstrate compliance with the current NZBC, a specific request should be made for the required detail to be supplied. No liability will be accepted for any detail or construction not covered in these drawings and/or carried out by persons other than the designer producing these documents.

Ismael & Rachel Pascual
Lot 620, DP 581780
41 Jean Batten Lane
Acland Park, Rolleston

Job Number:	Original Plan:	Sheet Name:	CONSENT PLANS	Sheet No.:
172973	*Kingfisher*	FRAMING DETAILS		14

No.	Date:	Reason:
1	09-03-2023	Initial Consent Plans
2	21-09-2023	Consent Amendment

Sales:	Drawn:	QS:	Print Date:	Scale:
L Sevalle	M Glynn	W Xian	21/09/2023	NTS @ A3

of 24 sheets

© Copyright: Signature Homes Limited 2012

PDC - Approved Building Consent Document - BC230326-Amendment 1 - Pg 15 of 61 - 29/09/2023 - steven.burnham

LUMBERLOK®

08/2017

STUD TO TOP PLATE FIXING SCHEDULE

ALTERNATIVE TO TABLE 8.18 NZS 3604:2011

NOTE:

- ★ All fixings are designed to resist vertical loads only. Dead loads include the roof weight and standard ceiling weight of 0.20kPa.
- ★ Refer to Table 8.19 NZS 3604:2011 for nailing schedule to resist lateral loads.
- ★ These fixings assume the correct choice of rafter/truss to top plate connections have been made.
- ★ For gable end walls where the adjacent rafter/truss is located within 1200mm and with a maximum verge overhang of 750mm, select stud to top plate fixing using a loaded dimension of 1.5m.
- ★ All fixings assume top plate thickness of 45mm maximum.
- ★ Wall framing arrangements under girder trusses are not covered in this schedule.
- ★ All timber selections are as per NZS 3604:2011.

LOADED DIMENSION DEFINITION

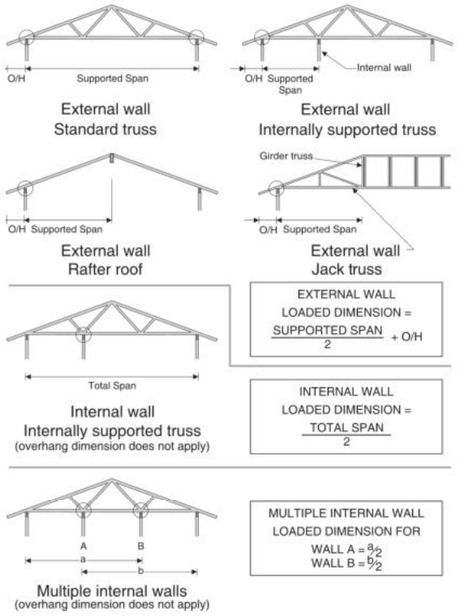

FIXING SELECTION CHART

(Suitable for walls supporting roof members at 600, 900 or 1200mm crs.)
Wind Zones L, M, H, VH, EH, as per NZS 3604:2011

Loaded Dimension (m) Stud Centres			Light Roof Wind Zone					Heavy Roof Wind Zone				
300mm	400mm	600mm	L	M	H	VH	EH	L	M	H	VH	EH
3.0	2.3	1.5	A	A	B	B	B	A	A	B	B	B
4.0	3.0	2.0	A	A	B	B	B	A	A	B	B	B
5.0	3.8	2.5	A	B	B	B	B	A	A	B	B	B
6.0	4.5	3.0	A	B	B	B	B	A	A	B	B	B
7.0	5.3	3.5	A	B	B	B	B	A	A	B	B	B
8.0	6.0	4.0	A	B	B	B	B	A	A	B	B	B
9.0	6.8	4.5	B	B	B	B	B	A	A	B	B	B
10.0	7.5	5.0	B	B	B	B	B	A	A	B	B	B
11.0	8.3	5.5	B	B	B	B	B	A	A	B	B	B
12.0	9.0	6.0	B	B	B	B	B	A	A	B	B	B

FIXING OPTIONS

FIXING TYPE A 0.7kN

2 x 90mm x 3.15 dia. plain steel wire nails driven vertically into stud.

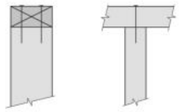

FIXING TYPE B 4.7kN — **CHOOSE ANY OF THE 3 OPTIONS BELOW**

2 x 90mm x 3.15 dia. plain steel wire nails driven vertically into stud.

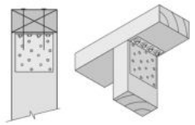

Plus
LUMBERLOK
6kN Stud Anchor
(CPC80)

2 x 90mm x 3.15 dia. plain steel wire nails driven vertically into stud.

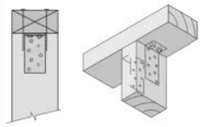

Plus
2 x LUMBERLOK
CPC40

Recommended for internal wall options to avoid lining issues

2 x 90mm x 3.15 dia. plain steel wire nails driven vertically into stud.

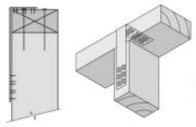

Plus
LUMBERLOK
Stud Strap
(one face only)

NOTE:
To calculate the number of B type fixings required, divide the wall length by the stud centres, add 1 to this figure and locate this number of fixings as evenly as possible along the wall length. This figure includes the start and end studs in each wall length.

SCAN FOR INSTALLATION VIDEO

https://vimeo.com/117353604

70 SERIES BRICK

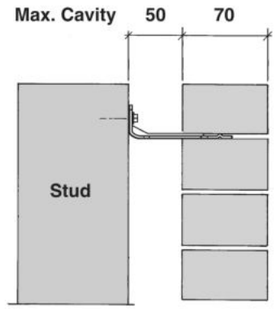

Screw Tie Short (85mm)

90 SERIES BRICK

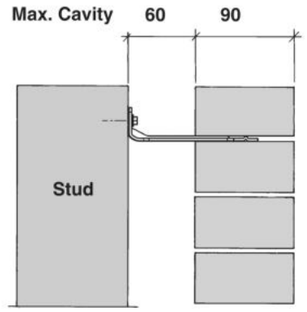

Screw Tie Long (105mm)

- ★ All brick work must be constructed in accordance with NZS 4210:2001 Masonry Construction:Materials and Workmanship. Screw Ties must be applied accordingly and are not to be hammered into timber framing.
- ★ Water shedding shoulder prevents transfer of the moisture from tie to building.
- ★ Nail hole for Oamaru Stone.
- ★ Angled neck encourages increased tie embedment in mortar.

Material: 1.2mm NZCC-SD Hot Dip Galvanised Steel
Screws: Type 17-12g x 35mm Hex Head Hot Dip Galvanised Screws
Packed: 250 ties per box including screws

Also available in Stainless Steel Grade 316 for Zone D.

SCREW TIES

FOR BRICK VENEER FIXING

- ★ Medium duty (EM) classification
- ★ Tested by BRANZ in accordance with AS/NZS 2699.1:2000
- ★ BRANZ test report No. ST0725 November 2007
- ★ Suitable for both 'dry bedding' and encapsulated mortar
- ★ Hot Dip Galvanised ties for Zones B & C, and Stainless Steel Grade 316 ties for Zone D meet NZS 3604:2011 Sect. 4 Durability
- ★ Available in 85mm and 105mm sizes

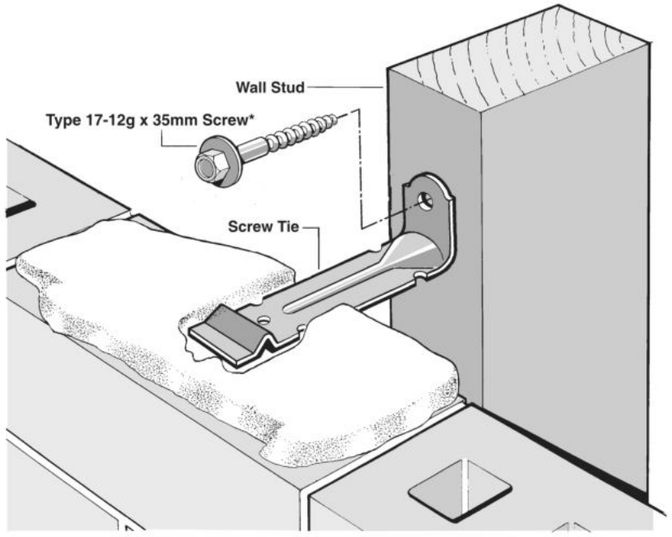

***NOTE:**
Use longer screws for fixing through Rigid Air Barrier (RAB). Maintain 35mm embedment in studs.

All dimensions are to be check and confirmed prior to any construction
Plans are to be read in conjunction with Specifications and all supporting documentation

Signature HOMES Est. 1983 — YOUR HOME. YOUR WAY.

TKR Homes Ltd.
31 Watts Road, Sockburn
PO BOX 11 351
Christchurch 8443

P: +64 3 342 7788

These drawings are limited to and by the extent of the detail covered in the drawings to meet the current New Zealand Building Code (NZBC). Where detail it required for construction and to demonstrate compliance with the current NZBC, a specific request should be made for the required detail to be supplied. No liability will be accepted for any detail or construction not covered in these drawings and/or carried out by persons other than the designer producing these documents.

Ismael & Rachel Pascual
Lot 620, DP 581780
41 Jean Batten Lane
Acland Park, Rolleston

Job Number:	Original Plan:	Sheet Name:	Sheet No.:
172973	*Kingfisher*	FRAMING DETAILS	15 of 24 sheets

Sales:	Drawn:	QS:	Print Date:	Scale:
L Sevalle	M Glynn	W Xian	21/09/2023	NTS @ A3

CONSENT PLANS

No.	Date:	Reason:
1	09-03-2023	Initial Consent Plans
2	21-09-2023	Consent Amendment

© Copyright: Signature Homes Limited 2012

PDC - Approved Building Consent Document - BC230326-Amendment 1 - Pg 16 of 61 - 29/09/2023 - steven.burnham

Figure 72B: **General window and door opening with drainage cavity**
Paragraphs 9.1.5, 9.1.9.3, 9.1.10.2, Figures 73C, 76, 85, 86, 91, 99, 116 and 128

NOTE:
(1) Detailed *cladding* omitted for clarity, refer to specific *claddings*.
(2) Head to be treated similarly with continuous *wall underlay* and *flexible tape* at corners.
(3) Refer individual cladding details for jamb flashings.

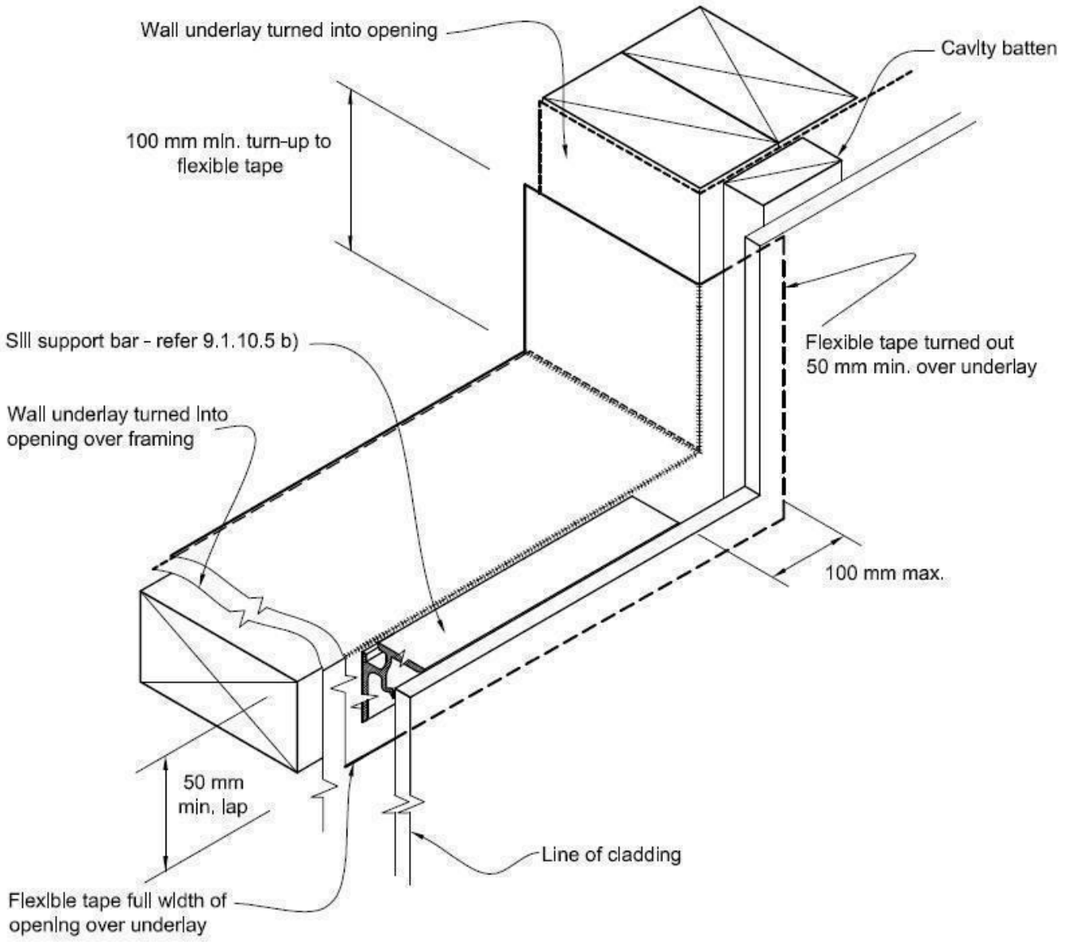

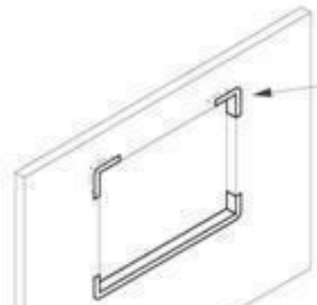

Where windows extend to soffit, flashing tape is to be fixed prior to ribbon board being fixed to framing.

Detail Tape Location to Wall Openings

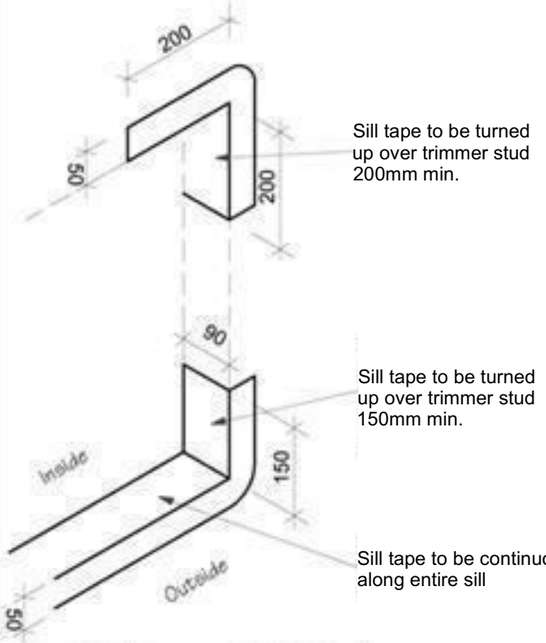

Sill tape to be turned up over trimmer stud 200mm min.

Sill tape to be turned up over trimmer stud 150mm min.

Sill tape to be continuous along entire sill

Trim all building wrap to finish flush with inside face of stud frame wall

Sill Tape Flashing Detail

All dimensions are to be check and confirmed prior to any construction
Plans are to be read in conjunction with Specifications and all supporting documentation

Signature Homes Est. 1983 — YOUR HOME. YOUR WAY.

TKR Homes Ltd.
31 Watts Road, Sockburn
PO BOX 11 351
Christchurch 8443

P: +64 3 342 7788

These drawings are limited to and by the extent of the detail covered in the drawings to meet the current New Zealand Building Code (NZBC). Where detail it required for construction and to demonstrate compliance with the current NZBC, a specific request should be made for the required detail to be supplied. No liability will be accepted for any detail or construction not covered in these drawings and/or carried out by persons other than the designer producing these documents.

Ismael & Rachel Pascual
Lot 620, DP 581780
41 Jean Batten Lane
Acland Park, Rolleston

Job Number:	Original Plan:	Sheet Name:	Sheet No.:
172973	***Kingfisher***	**CONSTRUCTION DETAILS**	**16** of 24 sheets

Sales:	Drawn:	QS:	Print Date:	Scale:
L Sevalle	**M Glynn**	**W Xian**	**21/09/2023**	**As Shown @ A3**

CONSENT PLANS

No.	Date:	Reason:
1	09-03-2023	Initial Consent Plans
2	21-09-2023	Consent Amendment

© Copyright: Signature Homes Limited 2012

BC - Approved Building Consent Document - BC230326-Amendment 1 - Pg 17 of 61 - 29/09/2023 - steven.burnham

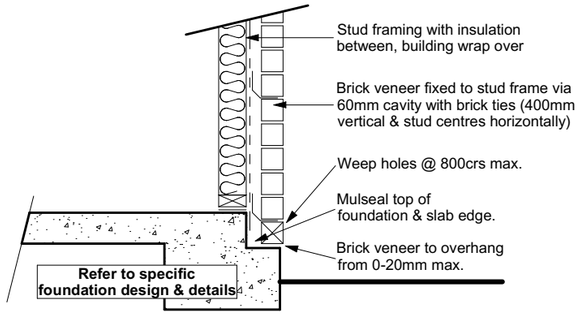

Brick Veneer Foundation
Scale 1:20

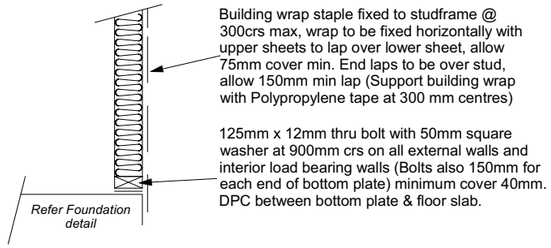

Stud framing to slab
Scale 1:20

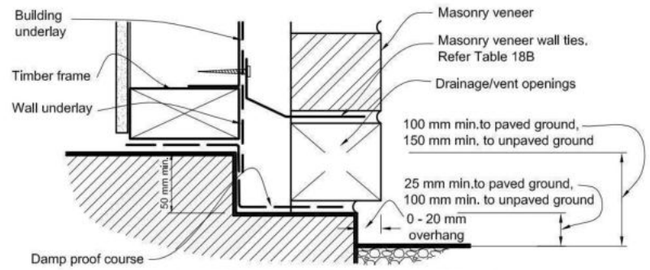

(i) MASONRY VENEER - FLOOR REBATE DETAIL

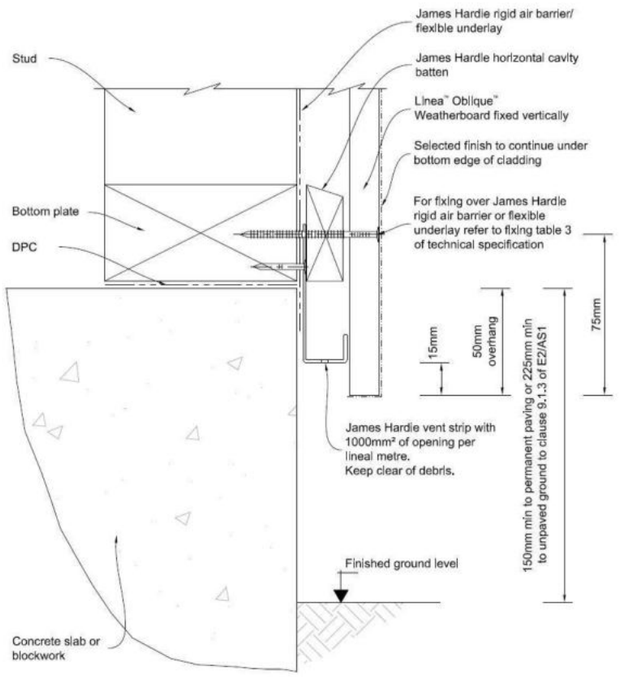

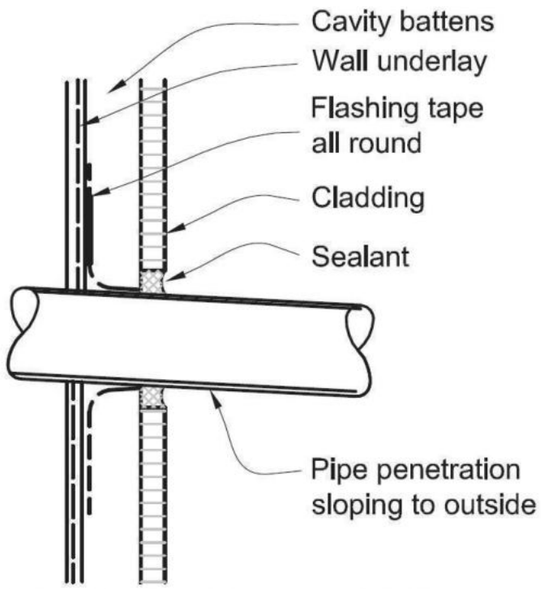

(a) CAVITY WITH FLASHING TAPE

Figure 65: Levels and garage openings
Paragraphs 9.1.3, 9.1.3.4, 9.2.5, Table 18

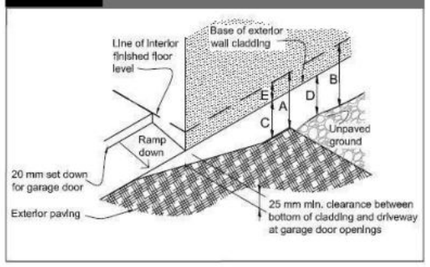

Table 18: Minimum clearances
Paragraphs 9.1.3, 9.1.3.1, 9.1.3.2, 9.1.3.3, 9.1.3.4, 9.1.3.5 and 9.2.7

Minimum clearances (mm)	Masonry veneer		Other claddings				
	A	B	A	B	C	D	E
Concrete slab	100	150	150	225	100	175	50
Timber floor Refer Note 1)					100	175	50 2)

NOTE: 1) Refer to NZS 3604 for requirements.
2) Cladding to extend minimum 50 mm below bearer or lowest part of timber floor framing.

All dimensions are to be check and confirmed prior to any construction
Plans are to be read in conjunction with Specifications and all supporting documentation

Signature Homes — YOUR HOME. YOUR WAY.

TKR Homes Ltd.
31 Watts Road, Sockburn
PO BOX 11 351
Christchurch 8443

P: +64 3 342 7788

These drawings are limited to and by the extent of the detail covered in the drawings to meet the current New Zealand Building Code (NZBC). Where detail it required for construction and to demonstrate compliance with the current NZBC, a specific request should be made for the required detail to be supplied. No liability will be accepted for any detail or construction not covered in these drawings and/or carried out by persons other than the designer producing these documents.

Ismael & Rachel Pascual
Lot 620, DP 581780
41 Jean Batten Lane
Acland Park, Rolleston

Job Number:	Original Plan:	Sheet Name:	Sheet No.:
172973	*Kingfisher*	**CONSTRUCTION DETAILS**	**17** of 24 sheets

Sales:	Drawn:	QS:	Print Date:	Scale:
L Sevalle	M Glynn	W Xian	21/09/2023	As Shown @ A3

CONSENT PLANS

No.	Date:	Reason:
1	09-03-2023	Initial Consent Plans
2	21-09-2023	Consent Amendment

© Copyright: Signature Homes Limited 2012

PDC - Approved Building Consent Document - BC230326-Amendment 1 - Pg 18 of 61 - 29/09/2023 - steven.burnham

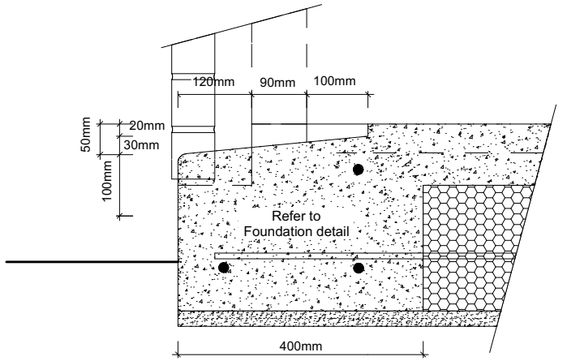

Garage Door Rebate Details
Scale 1:10

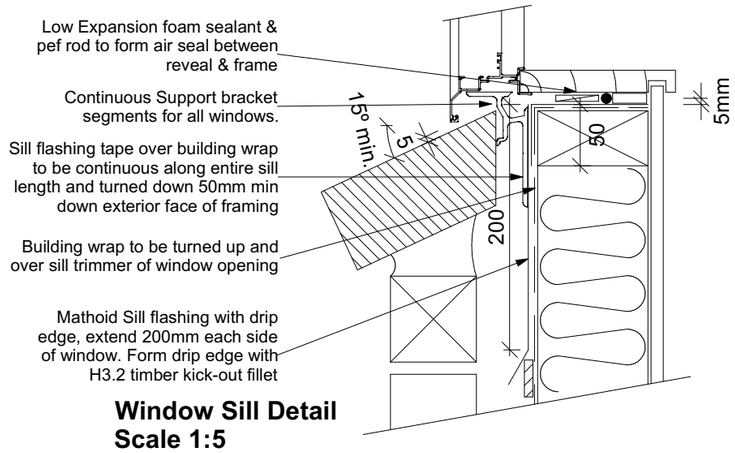

Window Sill Detail
Scale 1:5

9.1.10.8 Attachments for windows and doors

Install windows and doors using pairs of minimum 75 x 3.15 galvanised jolt head nails or 8 gauge x 65 mm stainless steel screws, through reveals into surrounding *framing* at:

a) Maximum 450 mm centres along sills, jambs and heads, and

b) Maximum 150 mm from reveal ends.

Install packers between reveals and *framing* at all fixing points, except between head reveals and lintels.

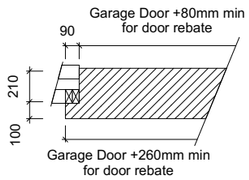

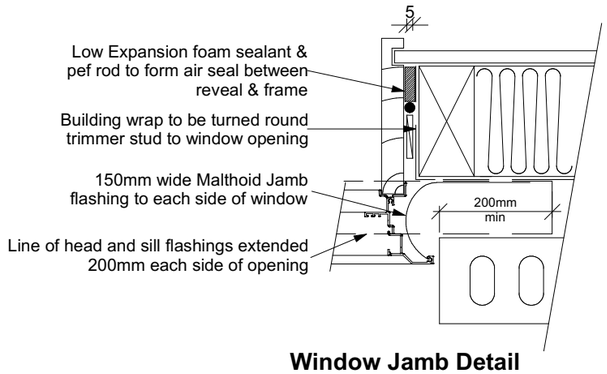

Window Jamb Detail
Scale 1:5

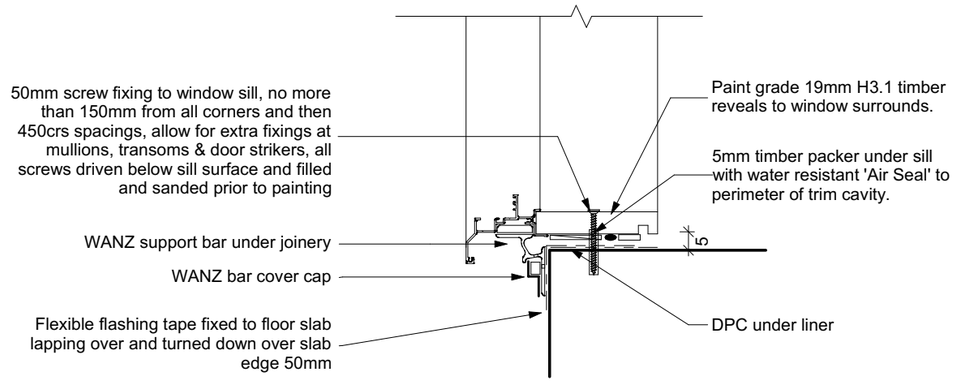

Sill to Slab Detail
Scale 1:20

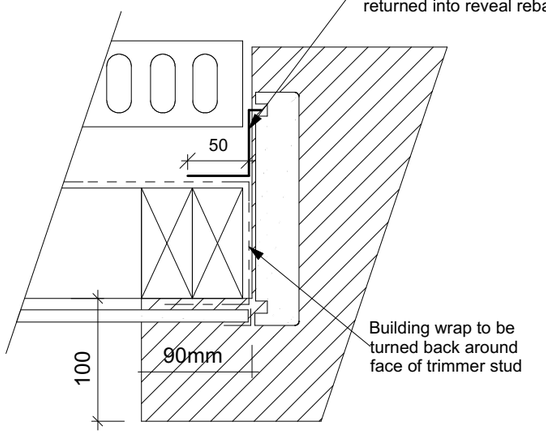

Garage Door Jamb Detail
Scale 1:5

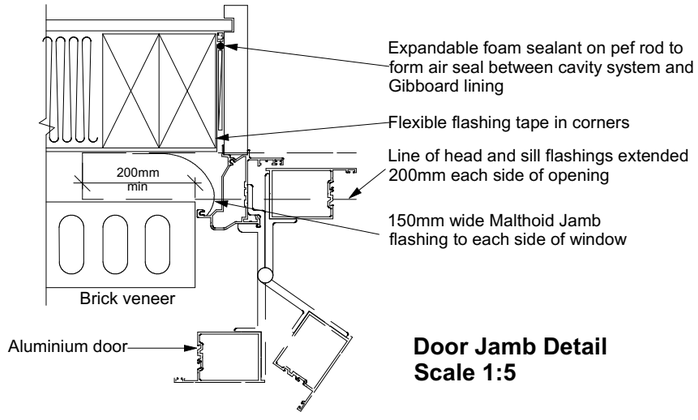

Door Jamb Detail
Scale 1:5

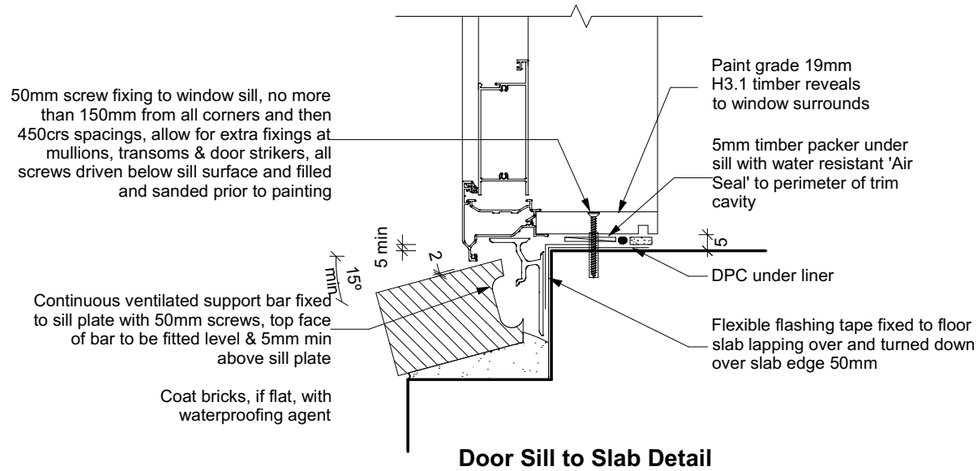

Door Sill to Slab Detail
Scale 1:20

All dimensions are to be check and confirmed prior to any construction
Plans are to be read in conjunction with Specifications and all supporting documentation

Signature HOMES Est. 1983 — YOUR HOME. YOUR WAY.

TKR Homes Ltd.
31 Watts Road, Sockburn
PO BOX 11 351
Christchurch 8443

P: +64 3 342 7788

These drawings are limited to and by the extent of the detail covered in the drawings to meet the current New Zealand Building Code (NZBC). Where detail it required for construction and to demonstrate compliance with the current NZBC, a specific request should be made for the required detail to be supplied. No liability will be accepted for any detail or construction not covered in these drawings and/or carried out by persons other than the designer producing these documents.

Ismael & Rachel Pascual
Lot 620, DP 581780
41 Jean Batten Lane
Acland Park, Rolleston

Job Number:	Original Plan:	Sheet Name:	Sheet No.:
172973	***Kingfisher***	**CONSTRUCTION DETAILS**	**18** of 24 sheets

Sales:	Drawn:	QS:	Print Date:	Scale:
L Sevalle	**M Glynn**	**W Xian**	**21/09/2023**	**As Shown @ A3**

CONSENT PLANS

No.	Date:	Reason:
1	09-03-2023	Initial Consent Plans
2	21-09-2023	Consent Amendment

© Copyright: Signature Homes Limited 2012

PDC - Approved Building Consent Document - BC230326-Amendment 1 - Pg 19 of 61 - 29/09/2023 - steven.burnham

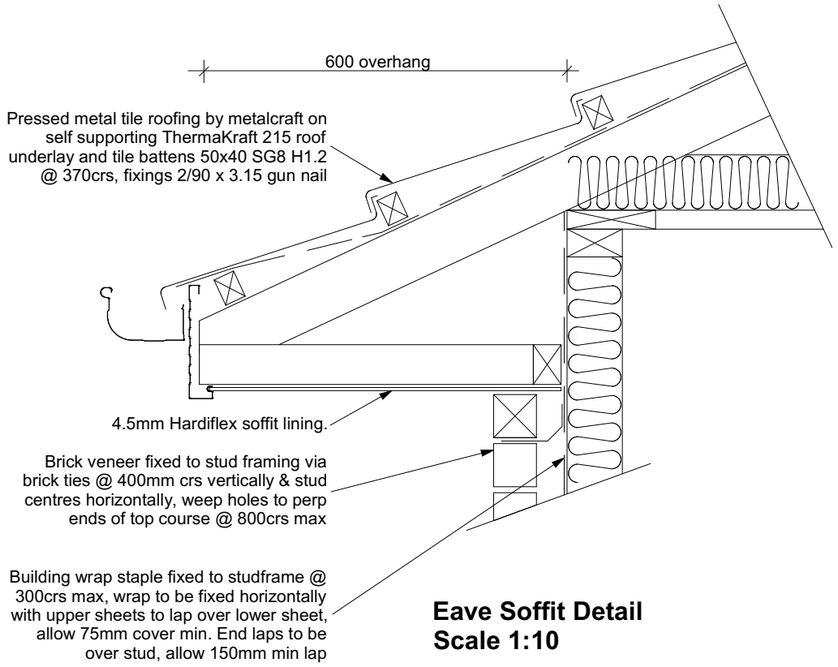

Eave Soffit Detail
Scale 1:10

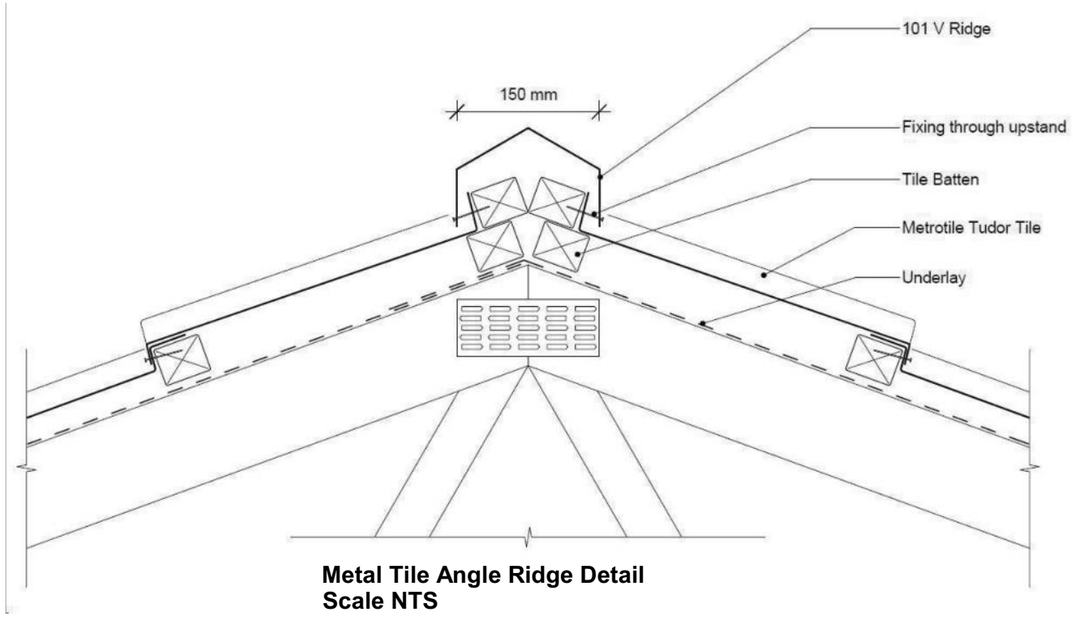

Metal Tile Angle Ridge Detail
Scale NTS

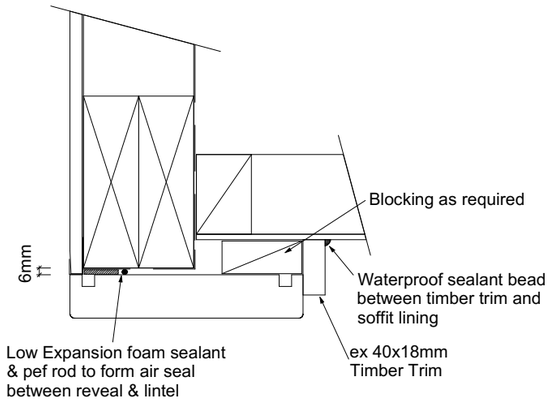

Garage Door Head to Soffit
Scale 1:5

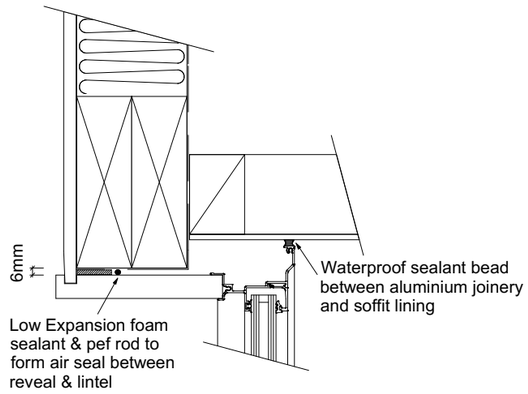

Window Head to Soffit Detail
Scale 1:5

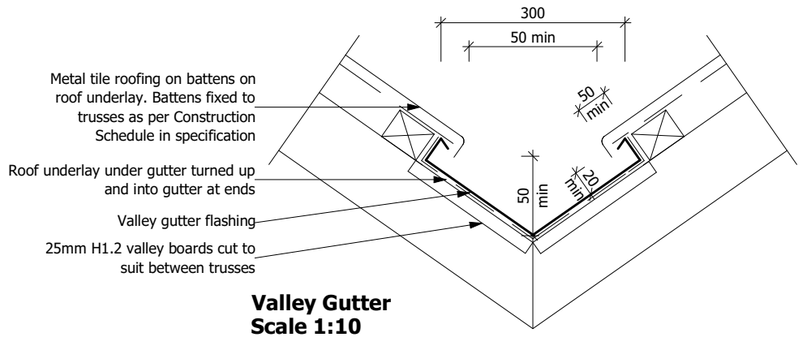

Valley Gutter
Scale 1:10

All dimensions are to be check and confirmed prior to any construction
Plans are to be read in conjunction with Specifications and all supporting documentation

TKR Homes Ltd.
31 Watts Road, Sockburn
PO BOX 11 351
Christchurch 8443

P: +64 3 342 7788

These drawings are limited to and by the extent of the detail covered in the drawings to meet the current New Zealand Building Code (NZBC). Where detail it required for construction and to demonstrate compliance with the current NZBC, a specific request should be made for the required detail to be supplied. No liability will be accepted for any detail or construction not covered in these drawings and/or carried out by persons other than the designer producing these documents.

Ismael & Rachel Pascual
Lot 620, DP 581780
41 Jean Batten Lane
Acland Park, Rolleston

Job Number:	Original Plan:	Sheet Name:	Sheet No.:
172973	***Kingfisher***	**CONSTRUCTION DETAILS**	**19**

Sales:	Drawn:	QS:	Print Date:	Scale:
L Sevalle	**M Glynn**	**W Xian**	**21/09/2023**	**As Shown @ A3**

CONSENT PLANS

No.	Date:	Reason:
1	09-03-2023	Initial Consent Plans
2	21-09-2023	Consent Amendment

of 24 sheets

© Copyright: Signature Homes Limited 2012

IDC - Approved Building Consent Document - BC230326-Amendment 1 - Pg 20 of 61 - 29/09/2023 - steven.burnham

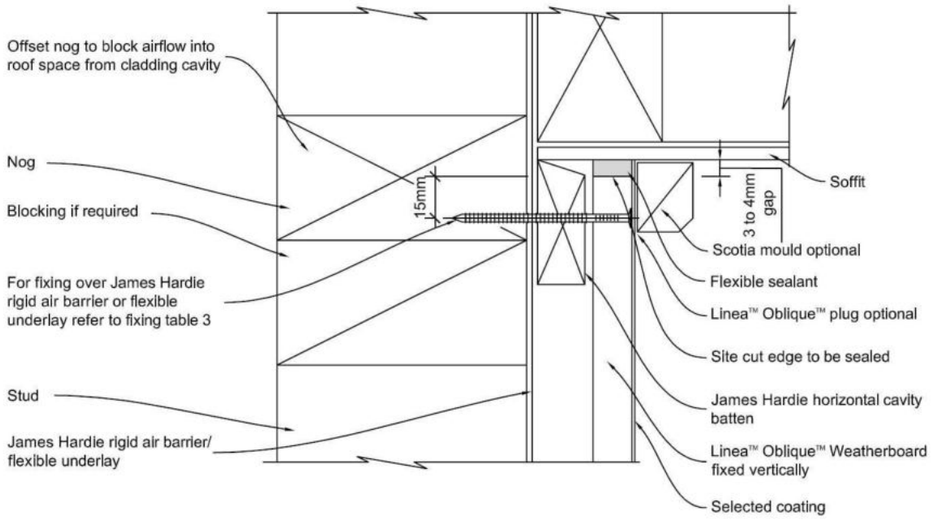

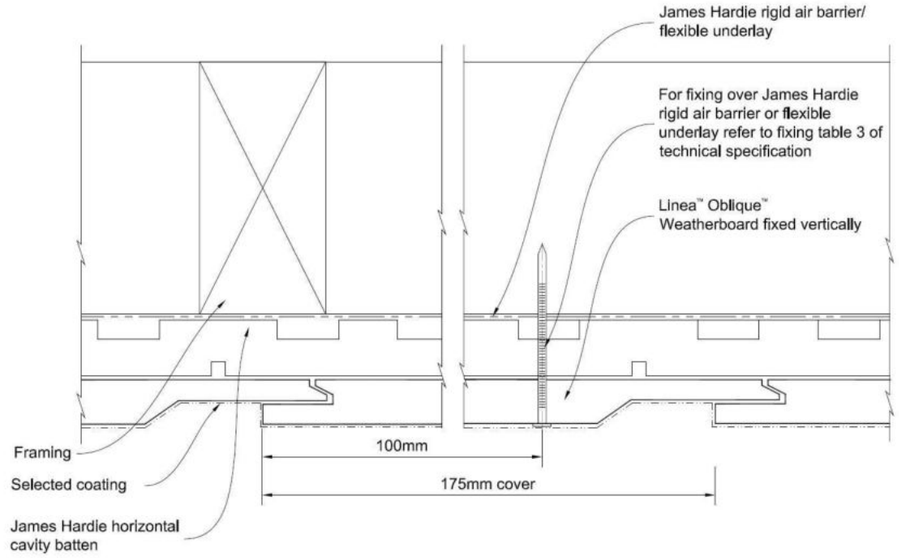

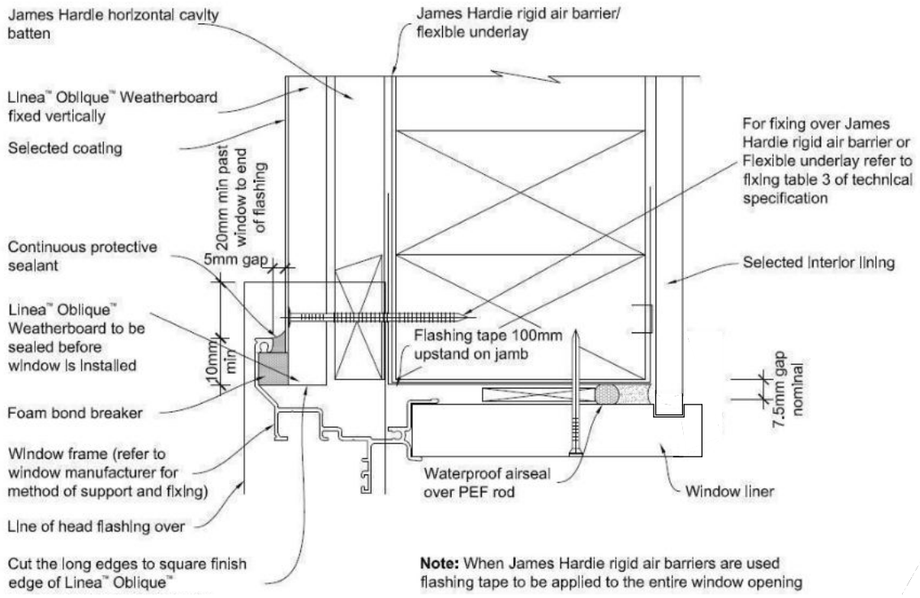

Note: When James Hardie rigid air barriers are used flashing tape to be applied to the entire window opening

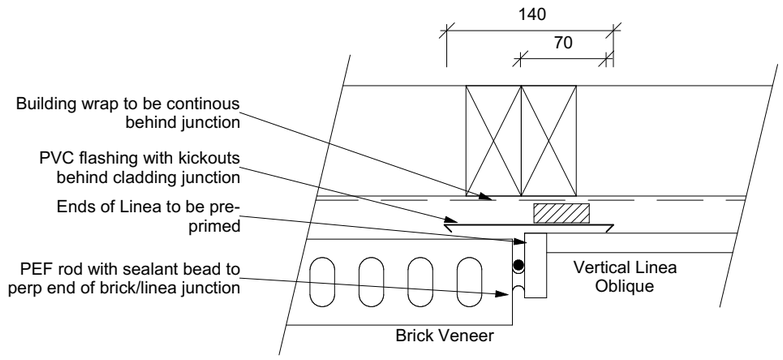

Linea Oblique/Brick Vertical Junction
Scale 1:5

All dimensions are to be check and confirmed prior to any construction
Plans are to be read in conjunction with Specifications and all supporting documentation

Signature HOMES Est. 1983 — YOUR HOME. YOUR WAY.

TKR Homes Ltd.
31 Watts Road, Sockburn
PO BOX 11 351
Christchurch 8443

P: +64 3 342 7788

These drawings are limited to and by the extent of the detail covered in the drawings to meet the current New Zealand Building Code (NZBC). Where detail it required for construction and to demonstrate compliance with the current NZBC, a specific request should be made for the required detail to be supplied. No liability will be accepted for any detail or construction not covered in these drawings and/or carried out by persons other than the designer producing these documents.

Ismael & Rachel Pascual
Lot 620, DP 581780
41 Jean Batten Lane
Acland Park, Rolleston

Job Number:	Original Plan:	Sheet Name:	Sheet No.:
172973	***Kingfisher***	**CONSTRUCTION DETAILS**	**20** of 24 sheets

Sales:	Drawn:	QS:	Print Date:	Scale:
L Sevalle	**M Glynn**	**W Xian**	**21/09/2023**	**As Shown @ A3**

CONSENT PLANS

No.	Date:	Reason:
1	09-03-2023	Initial Consent Plans
2	21-09-2023	Consent Amendment

© Copyright: Signature Homes Limited 2012

BC - Approved Building Consent Document - BC230326-Amendment 1 - Pg 21 of 61 - 29/09/2023 - steven.burnham

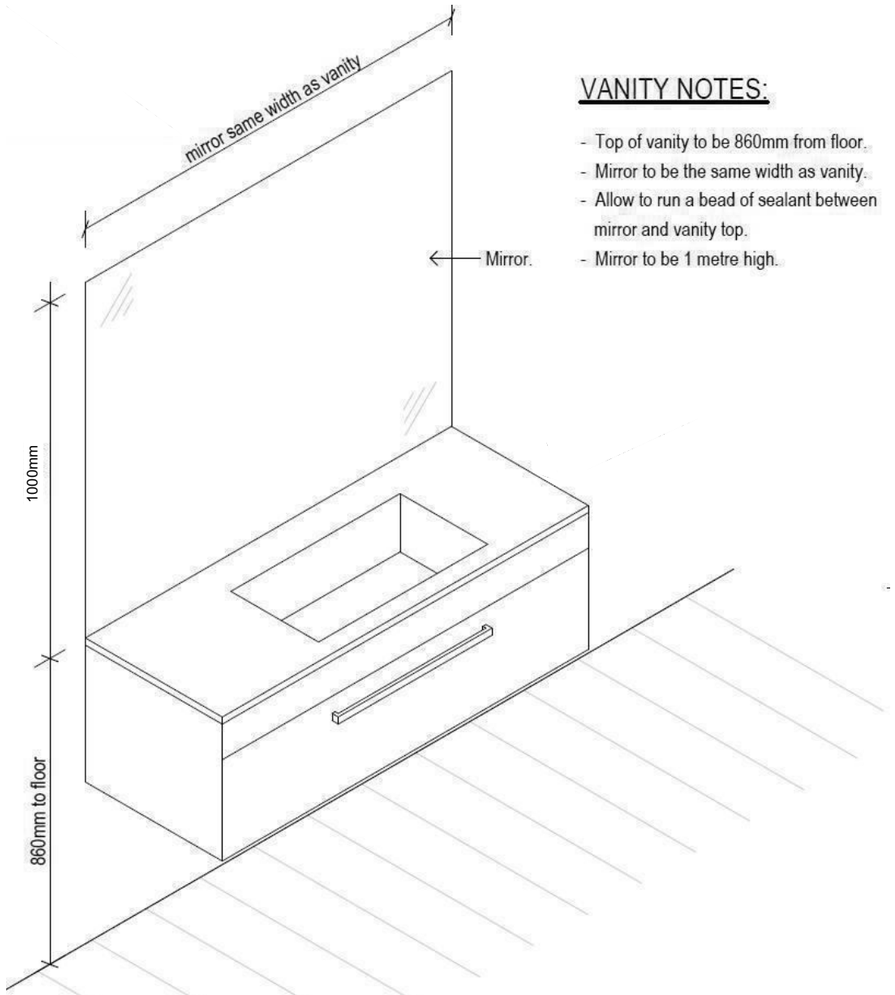

VANITY 3D PERSPECTIVE

VANITY NOTES:

- Top of vanity to be 860mm from floor.
- Mirror to be the same width as vanity.
- Allow to run a bead of sealant between mirror and vanity top.
- Mirror to be 1 metre high.

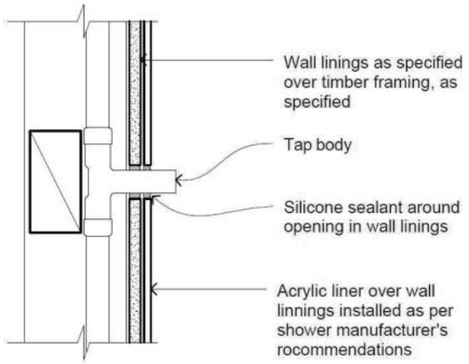

PENETRATION DETAIL

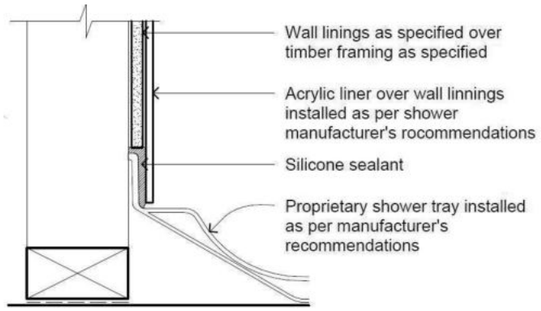

SHOWER TRAY DETAIL

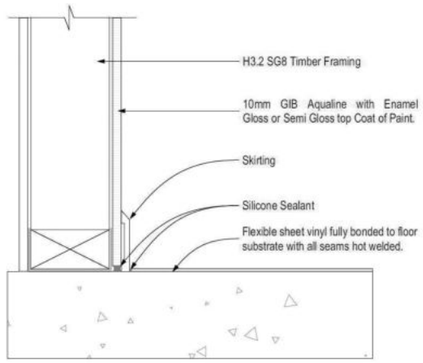

GENERAL FLOOR/WALL DETAIL

All dimensions are to be check and confirmed prior to any construction
Plans are to be read in conjunction with Specifications and all supporting documentation

Signature HOMES Est. 1983 — YOUR HOME. YOUR WAY.

TKR Homes Ltd.
31 Watts Road, Sockburn
PO BOX 11 351
Christchurch 8443

P: +64 3 342 7788

These drawings are limited to and by the extent of the detail covered in the drawings to meet the current New Zealand Building Code (NZBC). Where detail it required for construction and to demonstrate compliance with the current NZBC, a specific request should be made for the required detail to be supplied. No liability will be accepted for any detail or construction not covered in these drawings and/or carried out by persons other than the designer producing these documents.

Ismael & Rachel Pascual
Lot 620, DP 581780
41 Jean Batten Lane
Acland Park, Rolleston

Job Number:	Original Plan:	Sheet Name:	CONSENT PLANS	Sheet No.:
172973	***Kingfisher***	**BATHROOM DETAILS**		**21**

Sales:	Drawn:	QS:	Print Date:	Scale:
L Sevalle	**M Glynn**	**W Xian**	**21/09/2023**	**NTS @ A3**

No.	Date:	Reason:
1	09-03-2023	Initial Consent Plans
2	21-09-2023	Consent Amendment

of 24 sheets

© Copyright: Signature Homes Limited 2012

BCDC - Approved Building Consent Document - BC230326-Amendment 1 - Pg 22 of 61 - 29/09/2023 - steven.burnham

Figure 16: Tempering Valve Installation
Paragraph 6.14.2 a)

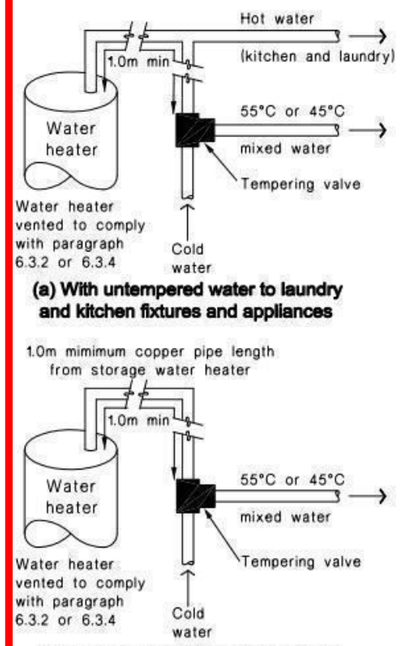

Note:
1. For optimum system efficiency the tempering valve, for other than a mains pressure system, may be located as low as practicable to achieve the manufacturer's recommended head, at the tempering valve.
2. 1.0m minimum copper pipe length from storage water heater.

Figure 8: Mains Pressure Storage Water Heater System (unvented)
Paragraphs 6.1.2 and 6.2.1 b)

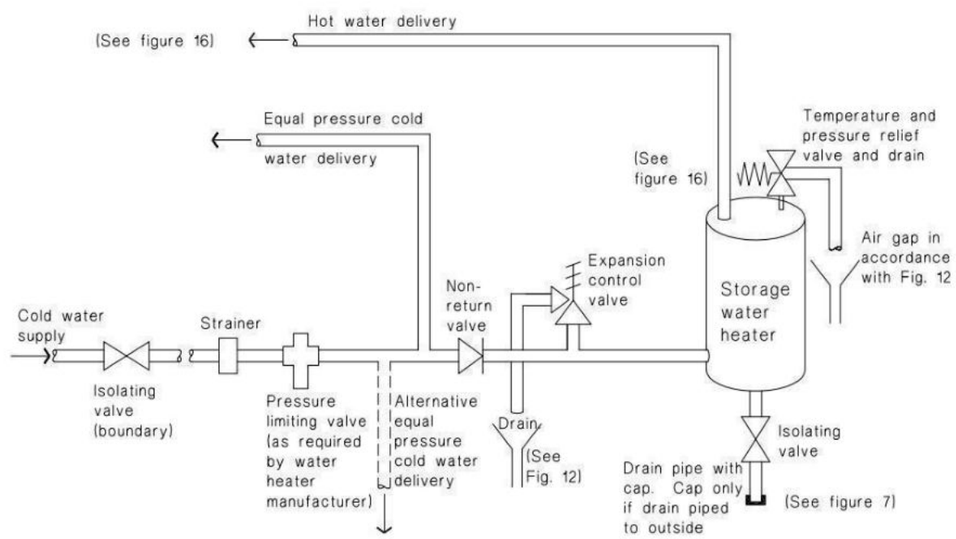

Figure 14: Seismic Restraint of Storage Water Heaters 90 – 360 litres
Paragraph 6.11.4

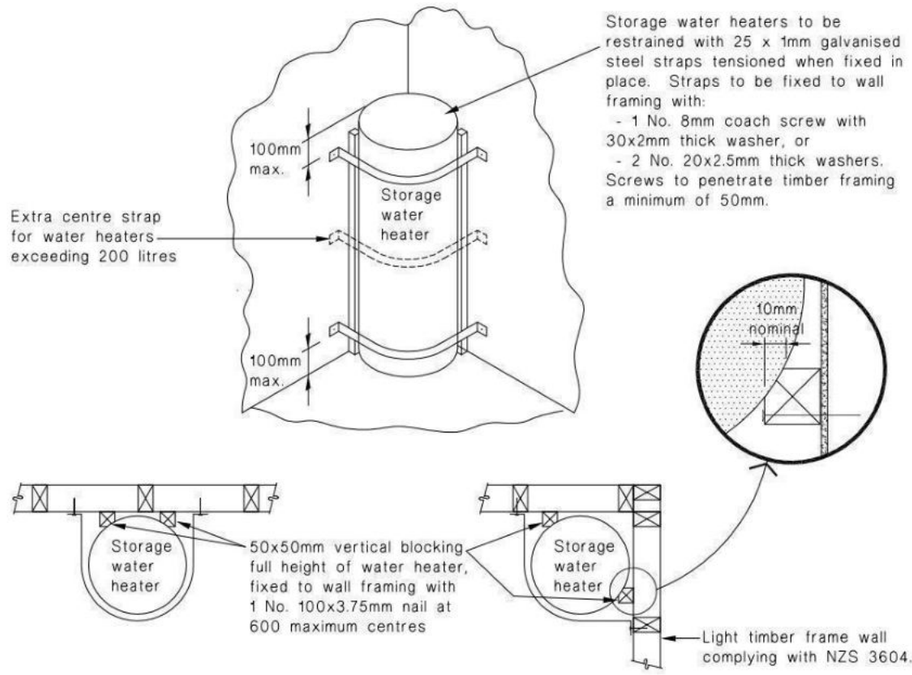

All dimensions are to be check and confirmed prior to any construction
Plans are to be read in conjunction with Specifications and all supporting documentation

Signature HOMES Est. 1983
YOUR HOME. YOUR WAY.

TKR Homes Ltd.
31 Watts Road, Sockburn
PO BOX 11 351
Christchurch 8443

P: +64 3 342 7788

These drawings are limited to and by the extent of the detail covered in the drawings to meet the current New Zealand Building Code (NZBC). Where detail it required for construction and to demonstrate compliance with the current NZBC, a specific request should be made for the required detail to be supplied. No liability will be accepted for any detail or construction not covered in these drawings and/or carried out by persons other than the designer producing these documents.

Ismael & Rachel Pascual
Lot 620, DP 581780
41 Jean Batten Lane
Acland Park, Rolleston

Job Number:	Original Plan:	Sheet Name:	Sheet No.:
172973	*Kingfisher*	PLUMBING DETAILS	22 of 24 sheets

Sales:	Drawn:	QS:	Print Date:	Scale:
L Sevalle	M Glynn	W Xian	21/09/2023	NTS @ A3

CONSENT PLANS

No.	Date:	Reason:
1	09-03-2023	Initial Consent Plans
2	21-09-2023	Consent Amendment

© Copyright: Signature Homes Limited 2012

BC - Approved Building Consent Document - BC230326-Amendment 1 - Pg 23 of 61 - 29/09/2023 - steven.burnham

Buildable Consent Layout

FTMA NEW ZEALAND

For valley/saddle truss fixing unless stated otherwise use a pair of wire dogs at 900mm centres for up to and including a very high wind zone. Or a pair of CT200's at 900mm centres for extra high wind zone.This fixing is to meet the minimum requirements as per NZS3604.

CARTERS Your Building Partner

NOTE/s:
- Dotted lines show top chords continuing up to hip board (No bottom chord below).
Bottom chords terminate at Girder Truss TG1A.

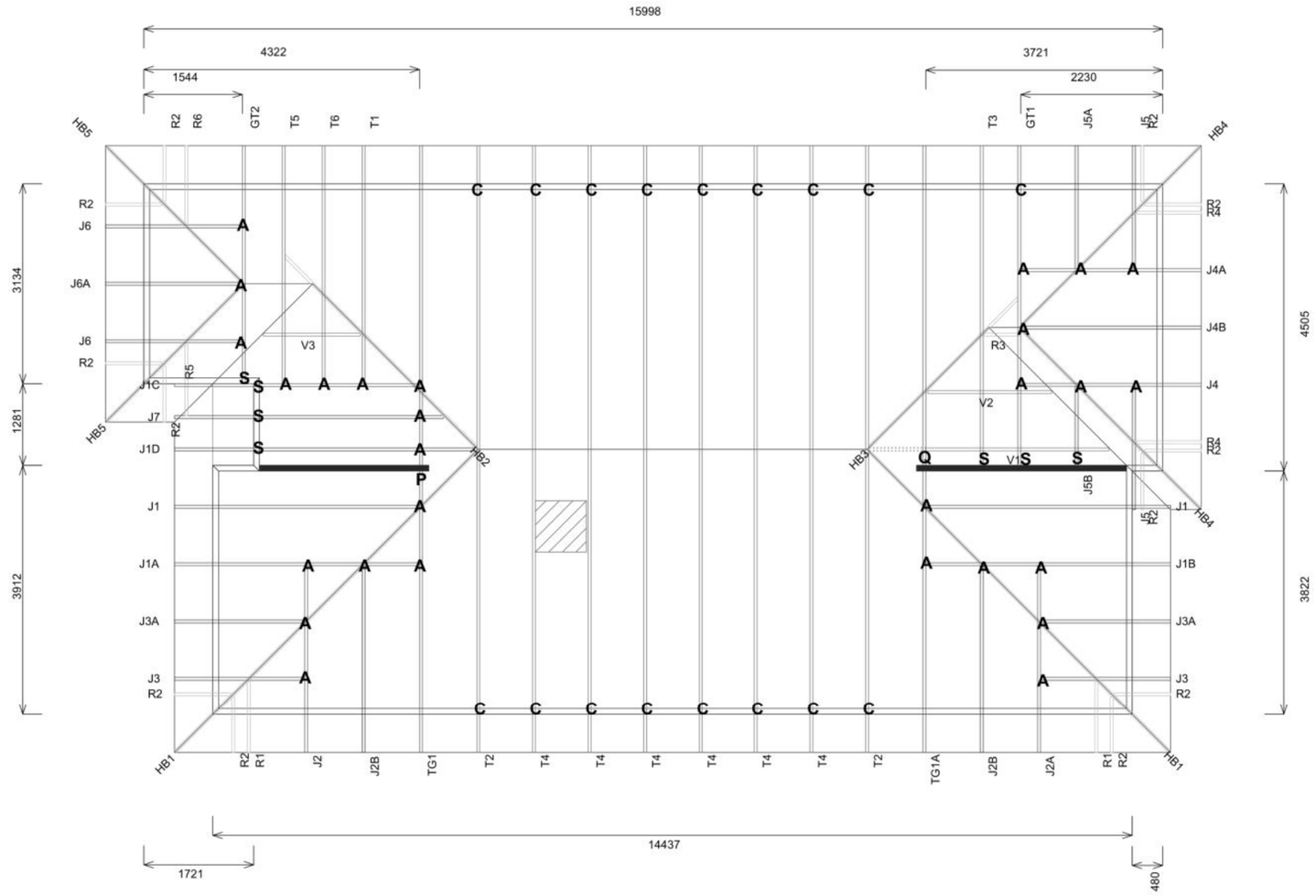

Ceiling Access

Beams

Loadbearing Internal Walls

Truss Fixings

A = 47x90 Joist Hanger
B = 47x120 Joist Hanger
C = CT200 (pair)
D = 47x190 Joist Hanger
E = 95x165 Joist Hanger
F = SH-140 Split Hanger
G = SH-180 Split Hanger
H = SH-220 Split Hanger
J = 2x6kN Strap (12kN)
K = 6kN Strap
L = Multigrip (single)
M = Multigrips (pair)
N = Nailon Plate (240x110x1)
P = 16kN Pack
Q = 9kN Pack
S = CPC 40 Single Cleat
T = CPC 40 Short (pair)
U = CPC 80 Single Cleat
V = 16kN Uplift
Z = Engineers Design

Unless otherwise indicated, all specified truss fixings are to use L/Lok product nail fasteners or Type 17 - 14g Hex Head Screws (as per the MiTek On-site Guide)

All truss to frame fixings require 2 additional 2/90x3.15dia skew nails.

All truss fixings not indicated as above must have 2 wire dogs for cross joints and 2/90x3.15dia nails for butt joins.

Fixings shown are for fixing trusses to the top plate. Any other point load uplift fixings down through the framing stud to top plate, stud to bottom plate, bottom plate to floor remain the responsibility of the architect / draughtsman.

Any roof loads as stated on this layout over 16kN lift are outside the scope of NZS3604, and the architect / draughtsperson is responsible for the design to transfer the loads to the ground.

Snow Zone:	Christchurch (N4)
Wind Area:	High
TC Restraints:	400 mm
Roof Material:	Metal Tiles
Roof Pitch:	25.00 °
Snow Altitude:	100.000 m
Design Wind Speed:	44.0 m/s
BC Restraints:	600 mm
Ceiling Material:	Standard Plaster Board 13mm
Ground Snow Load:	0.900 kPa
Truss Centres:	900 mm

MiTek SAPPHIRE™ Every Facet an Advantage.

Drawn:	Coleen Luluquisin
Date:	2/03/2023

Job No: **CH1383986C1**
Customer: TKR Homes Limited | T/A Signature Homes Canterbury
Job Name: RKG Holdings Lot 620 Acland Park Rolleston
Address: Lot 620
Acland Park, Rolleston

If a gable truss requires a windbeam brace, the type of MiTek brace will be noted as such on the layout.
The truss fixings can be substittuted for other fixings of the same or greater capacity.
All verge framing to be fixed according to the MiTek On-Site Guide if not covered by NZS3604.
If bottom chord restraints are 35mm Metal battens, then they must be fixed with either two nails or screws.
If the metal battens are fixed with a single nail or screw then 90x45mm bottom chords restraints will be required at 1800mm centres

All loads shown on this page regarding the truss fixings are characteristic loads

All dimensions are to be check and confirmed prior to any construction
Plans are to be read in conjunction with Specifications and all supporting documentation

Signature Homes Est. 1983 YOUR HOME. YOUR WAY.

TKR Homes Ltd.
31 Watts Road, Sockburn
PO BOX 11 351
Christchurch 8443

P: +64 3 342 7788

These drawings are limited to and by the extent of the detail covered in the drawings to meet the current New Zealand Building Code (NZBC). Where detail it required for construction and to demonstrate compliance with the current NZBC, a specific request should be made for the required detail to be supplied. No liability will be accepted for any detail or construction not covered in these drawings and/or carried out by persons other than the designer producing these documents.

Ismael & Rachel Pascual
Lot 620, DP 581780
41 Jean Batten Lane
Acland Park, Rolleston

Job Number:	Original Plan:	Sheet Name:
172973	*Kingfisher*	**TRUSS DESIGN**

Sales:	Drawn:	QS:	Print Date:	Scale:
L Sevalle	M Glynn	W Xian	21/09/2023	NTS @ A3

CONSENT PLANS

No.	Date:	Reason:
1	09-03-2023	Initial Consent Plans
2	21-09-2023	Consent Amendment

Sheet No.: **23** of 24 sheets

© Copyright: Signature Homes Limited 2012

BSC - Approved Building Consent Document - BC230326-Amendment 1 - Pg 24 of 61 - 29/09/2023 - steven.burnham

Buildable Consent Layout

FTMA NEW ZEALAND

All internal walls shown on this layout are considered to be loadbearing
Lintel fixing specification remains the responsibility of the architect / draughtsperson

CARTERS Your Building Partner

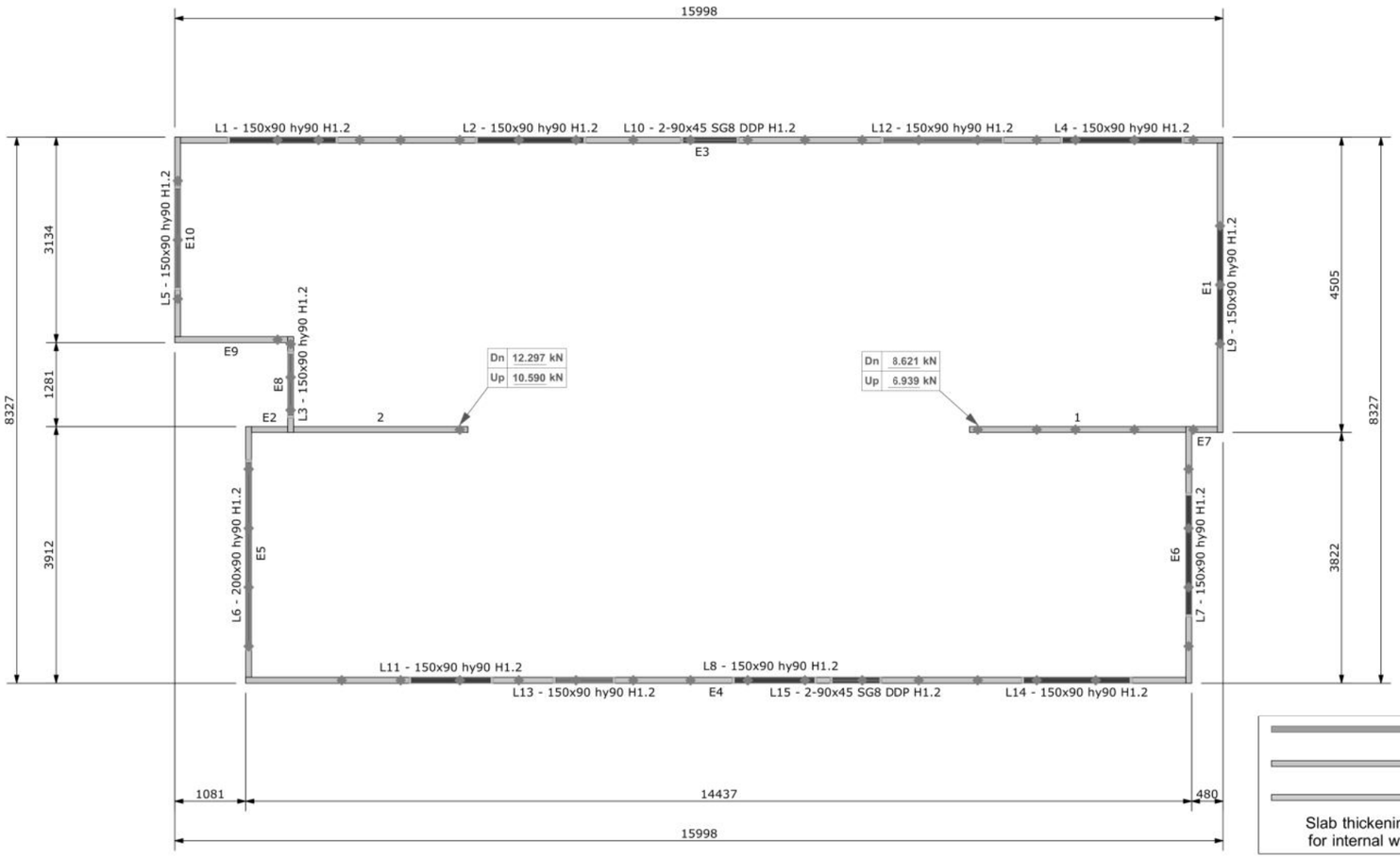

Beams
Loadbearing Walls
Non Loadbearing Walls

Slab thickening might not be required for internal walls, please check below

Lintel Fixings are as per the included reports.

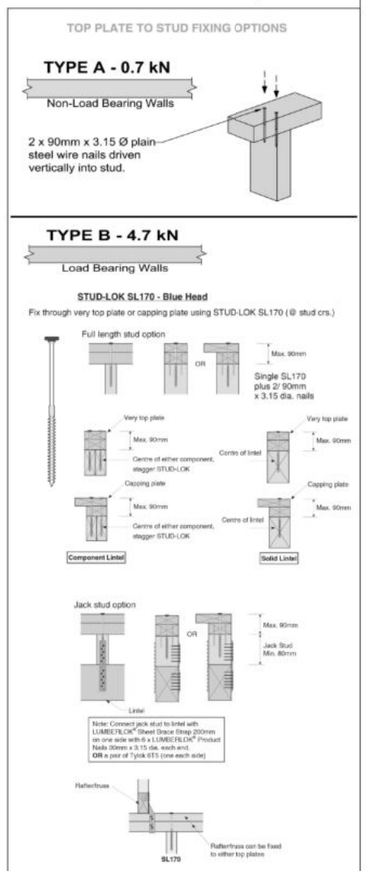

Note: These top plate to stud fixing options do not apply to walls under floors, just walls with trusses or rafters attached.

MiTek SAPPHIRE™ Every Facet an Advantage.

Drawn:	Coleen Luluquisin
Date:	2/03/2023

Job No: **CH1383986C1**
Customer: TKR Homes Limited | T/A Signature Homes Canterbury
Job Name: RKG Holdings Lot 620 Acland Park Rolleston
Address: Lot 620
Acland Park, Rolleston

Notification of point loaded lintels or point loads on internal walls where the downward load is higher than 8kN (85mm raft type slab) or 10kN (100mm standard slab), or the upward load is greater than 10kN. These loads are Ultimate Limit State Loads

If no loads are shown, no thickening is required.

The lintels have been sized using one of the following:

The MiTek SAPPHIRE Component Design Software.
hy90, hyONE and hySPAN lintels have been sized using the designIT for houses - New Zealand series 6 software.
GANGLAM and FLITCH BEAMS have been sized using the MiTek Beam Program V1.10 June 2011.

Unless otherwise stated the timber grade for all lintels is SG8. Lintels not shown are to be selected as per NZS3604: 2011 or designed by an engineer as required.
The lintels have not been designed to support brick shelf angles. The Architect or Engineer is required to design all lintels supporting brick shelf angles.

All dimensions are to be check and confirmed prior to any construction
Plans are to be read in conjunction with Specifications and all supporting documentation

Signature Homes Est. 1983 YOUR HOME. YOUR WAY.

TKR Homes Ltd.
31 Watts Road, Sockburn
PO BOX 11 351
Christchurch 8443

P: +64 3 342 7788

These drawings are limited to and by the extent of the detail covered in the drawings to meet the current New Zealand Building Code (NZBC). Where detail it required for construction and to demonstrate compliance with the current NZBC, a specific request should be made for the required detail to be supplied. No liability will be accepted for any detail or construction not covered in these drawings and/or carried out by persons other than the designer producing these documents.

Ismael & Rachel Pascual
Lot 620, DP 581780
41 Jean Batten Lane
Acland Park, Rolleston

Job Number:	Original Plan:	Sheet Name:
172973	***Kingfisher***	**TRUSS DESIGN**

Sales:	Drawn:	QS:	Print Date:	Scale:
L Sevalle	**M Glynn**	**W Xian**	**21/09/2023**	**NTS @ A3**

CONSENT PLANS

No.	Date:	Reason:
1	09-03-2023	Initial Consent Plans
2	21-09-2023	Consent Amendment

Sheet No.: **24** of 24 sheets

© Copyright: Signature Homes Limited 2012

Demand Calculation Sheet

SDC - Approved Building Consent Document - BC230326-Amendment 1 - Pg 25 of 61 - 29/09/2023 - steven.burnham

Job Details

Name:	Ismael & Rachel Pascual
Street and Number:	Acland Park
Lot and DP Number:	Lot 620
City/Town/District:	Rolleston
Designer:	M Glynn
Company:	Signature Homes Ltd
Date:	Thursday, 31 August 2023

Building Specification

Number of Storeys	1
Floor Loading	2 kPa
Foundation Type	Slab
	Single
Cladding Weight	Heavy
Roof Weight	Light
Room in Roof Space	No
Roof Pitch (degrees)	25
Roof Height above Eaves (m)	2.43
Building Height to Apex (m)	4.77
Ground to Lower Floor (m)	0.2
Average Stud Height (m)	2.4
Building Length (m)	16.2
Building Width (m)	8.57
Building Plan Area (m²)	130.28

Building Location

Wind Zone = High

Wind Region	A
Lee Zone	No
Ground Texture	Open
Site Exposure	Exposed
Hill Ste Category	T1

Earthquake Zone 2

Soil Type	D & E (Deep to Very Soft)
Annual Prob. of Exceedance:	1 in 500 (Default)

Bracing Units required for Wind

	Along	Across
Single Level	**437**	**814**

Bracing Units required for Earthquake

	Along & Across
Single Level	**782**

Single Level Along Resistance Sheet

Job Name: Ismael & Rachel Pascual

									Wind	EQ
									Demand	
									437	782
									Achieved	
Line	Element	Length (m)	Angle (degrees)	Stud Ht. (m)	Type	Supplier	Wind (BUs)	EQ (BUs)	1196□ 274%	1268□ 162%
A	1	0.60		2.4	EP1 0.6	Ecoply®	57	63		
	2	1.20		2.4	EP1 1.2	Ecoply®	144	162		
	3	1.20		2.4	EP1 1.2	Ecoply®	144	162		
	4	0.60		2.4	EP1 0.6	Ecoply®	57	63		
									402 OK	450 OK
B	1	1.80		2.4	GS1-N	GIB®	124	108		
	2	1.80		2.4	GS1-N	GIB®	124	108		
	3	1.20		2.4	EP1 1.2	Ecoply®	144	162		
									392 OK	378 OK
C	1	0.60		2.4	EP1 0.6	Ecoply®	57	63		
	2	1.20		2.4	EP1 1.2	Ecoply®	144	162		
	3	0.90		2.4	GS1-N	GIB®	57	53		
	4	1.20		2.4	EP1 1.2	Ecoply®	144	162		
									402 OK	440 OK

SDC - Approved Building Consent Document - BC230326-Amendment 1 - Pg 26 of 61 - 29/09/2023 - steven.burnham

Single Level Across Resistance Sheet

Job Name: Ismael & Rachel Pascual

									Wind	EQ
									Demand	
									814	782
									Achieved	
Line	Element	Length (m)	Angle (degrees)	Stud Ht. (m)	Type	Supplier	Wind (BUs)	EQ (BUs)	1006 124%	985 126%
M	1	0.60		2.4	EP1 0.6	Ecoply®	57	63		
	2	1.20		2.4	EP1 1.2	Ecoply®	144	162		
	3	0.60		2.4	EP1 0.6	Ecoply®	57	63		
									258 OK	288 OK
N	1	1.80		2.4	GS1-N	GIB®	124	108		
	2	0.90		2.4	GS1-N	GIB®	57	53		
									181 OK	161 OK
O	1	1.80		2.4	GS1-N	GIB®	124	108		
									124 OK	108 OK
P	1	1.50		2.4	GS1-N	GIB®	104	90		
	2	1.80		2.4	GS1-N	GIB®	124	108		
									228 OK	198 OK
Q	1	0.60		2.4	BL1-H	GIB®	59	61		
	2	0.60		2.4	BL1-H	GIB®	59	61		
	3	0.40		2.4	BLP-H	GIB®	48	54		
	4	0.40		2.4	BLP-H	GIB®	48	54		
									215 OK	229 OK

SDC - Approved Building Consent Document - BC230326-Amendment 1 - Pg 27 of 61 - 29/09/2023 - steven.burnham

Custom Wall Elements

Supplier	System	Min. Length m	Wind BUs/m	EQ BUs/m
Ecoply®	EP1 0.4	0.4	80	95
Ecoply®	EP1 0.6	0.6	95	105
Ecoply®	EP1 1.2	1.2	120	135
NZS3604	masonry 0.75	1.5	42	42
NZS3604	masonry 1.5	1.5	100	100
NZS3604	masonry 3.0	1.5	200	200
NZS3604	masonry 4.5	1.5	300	300

SDC - Approved Building Consent Document - BC230326-Amendment 1 - Pg 28 of 61 - 29/09/2023 - steven.burnham

SDC - Approved Building Consent Document - BC230326-Amendment 1 - Pg 29 of 61 - 29/09/2023 - steven.burnham

Form 2A

Memorandum from licensed building practitioner: Certificate of design work

Section 45 and Section 30C, Building Act 2004

Please fill in the form as fully and correctly as possible.

If there is insufficient room on the form for requested details, please continue on another sheet and attach the additional sheet(s) to this form.

THE BUILDING

Street address: **41 Jean Batten Lane, Rolleston – Lot 620**	
Suburb:	
Town/City	Postcode:

THE OWNER

Name(s): **Ismael & Rachel Pascual**	
Mailing address: **574 Buckleys Road, RD7, Ashburton**	
Suburb:	PO Box/Private Bag:
Town/City:	Postcode:
Phone number: **0212614525**	Email address: **rachel.pascual.1975@gmail.com**

BASIS FOR PROVIDING THIS MEMORANDUM

I am providing this memorandum in my role as the: Please tick the option that applies (√)	
( )	**sole** designer of all of the RBW design outlined in this memorandum – I carried out all of the RBW design myself – no other person will be providing any additional memoranda for the project
( )	**lead** designer who carried out some of the RBW design myself but also supervised other designers – this memorandum covers their RBW design work as well as mine, and no other person will be providing any additional memoranda for the project
(√)	**lead** designer for all but specific elements of RBW – this memorandum only covers the RBW design work that I carried out or supervised and the other designers will provide their own memoranda relating to their specific RBW design
( )	**specialist** designer who carried out specific elements of RBW design work as outlined in this memorandum – other designers will be providing a memorandum covering the remaining RBW design work

IDENTIFICATION OF DESIGN WORK THAT IS RESTRICTED BUILDING WORK (RBW)

I _____**Martyn Glynn**_____ carried out / supervised the following design work that is restricted building work

PRIMARY STRUCTURE: B1

Design work that is restricted building work	***Description***	***Carried out/ supervised***	***Reference to plans and specifications***
Tick(√)if included *Cross (X) if excluded*	*[If appropriate, provide details of the restricted building work]*	*[Specify whether you carried out this design work or supervised someone else carrying out this design work]*	*[If appropriate, specify references]*

SDC - Approved Building Consent Document - BC230326-Amendment 1 - Pg 30 of 61 - 29/09/2023 - steven.burnham

Primary structure

All RBW Design work relating to B1 ( )		( ) Carried out ( ) Supervised	
Foundations and subfloor framing ( )	*N/A*	( ) Carried out ( ) Supervised	
Walls (√)	*Timber Framed Walls*	(√) Carried out ( ) Supervised	Construction Schedule in Spec
Roof ( )	*N/A*	( ) Carried out ( ) Supervised	
Columns and beams ( )	*N/A*	( ) Carried out ( ) Supervised	
Bracing (√)	*GIB & Ply Bracing*	(√) Carried out ( ) Supervised	Bracing Schedule
Other ( )	*N/A*	( ) Carried out ( ) Supervised	

EXTERNAL MOISTURE MANAGEMENT SYSTEMS: E2

All RBW design work relating to E2 (√)	*All work complies with E2/AS1*	(√) Carried out ( ) Supervised	Consent Plans Specifications
Damp proofing ( )		( ) Carried out ( ) Supervised	
Roof cladding or roof cladding system ( )		( ) Carried out ( ) Supervised	
Ventilation system (for example, subfloor or cavity) ( )		( ) Carried out ( ) Supervised	
Wall cladding or wall cladding system ( )		( ) Carried out ( ) Supervised	
Waterproofing ( )		( ) Carried out ( ) Supervised	
Other ( )		( ) Carried out ( ) Supervised	

FIRE SAFETY SYSTEMS: C1 – C6

Emergency warning systems, evacuation and fire service operation systems, suppression or control systems, or other ( )	*N/A*	( ) Carried out ( ) Supervised	

SDC - Approved Building Consent Document - BC230326-Amendment 1 - Pg 31 of 61 - 29/09/2023 - steven.burnham

Note: The design of fire safety systems is only restricted building work when it involves small-to-medium apartment buildings as defined by the Building (Definition of Restricted Building Work) Order 2011.

Note: continue on another page if necessary.

WAIVERS AND MODIFICATIONS

Waivers or modifications of the building code are required ( ) Yes (√) No

If Yes, provide details of the waivers or modifications below:

Clause	**Waiver/modification required**
[List relevant clause numbers of building code]	*[Specify nature of waiver or modification of building code]*
	N/A

Note: continue on another page if necessary.

ISSUED BY

Name: **Martyn Glynn**	LBP or Registration number: **105510**
The practitioner is a: (√) Design LBP ( ) Registered architect ( ) Chartered professional engineer	
Design Entity or Company (optional): **Signature Homes**	
Mailing address (if different from below):	
Street address / Registered office: **31 Watts Road**	
Suburb: **Sockburn**	Town/City: **Christchurch**
PO Box/Private Bag:	Postcode:
Phone number: **033427788**	Mobile:
After Hours:	Fax:
Email address:	Website:

DECLARATION

I **Martyn Glynn** [*name of practitioner*] , LBP,

state that I have applied the skill and care reasonably required of a competent design professional in carrying out or supervising the Restricted Building Work (RBW) described in this form, and that based on this, I also state that the RBW:

- Complies with the building code; or
- Complies with the building code subject to any waiver or modification of the building code recorded on this form.

Signature:

Date: **20/09/2023**

AGREEMENT FOR SALE AND PURCHASE OF REAL ESTATE

This form is approved by the Real Estate Institute of New Zealand Incorporated and by Auckland District Law Society Incorporated.

DATE: 10th August 2023

VENDOR: TKR Developments Limited

PURCHASER: Ismael F. Pascual, Rachel D. Pascual & Marc Justine D. Pascual ~~and/or nominee~~

The vendor is registered under the GST Act in respect of the transaction and/or will be so registered at settlement: Yes ~~Yes/No~~
If "Yes", Schedule 1 must be completed by the parties.

Purchase price allocation (PPA) is relevant to the parties for income tax and/or GST purposes: Vendor ~~Yes~~/No
If both parties answer "Yes", use of the PPA addendum for this agreement is recommended. Purchaser/Purchaser's Nominee Yes/No

PROPERTY
Address: 41 Jean Batten Lane, Acland Park Subdivision, Rolleston

Estate: FREEHOLD ~~LEASEHOLD~~ ~~STRATUM IN FREEHOLD~~
~~STRATUM IN LEASEHOLD~~ ~~CROSS LEASE (FREEHOLD)~~ ~~CROSS LEASE (LEASEHOLD)~~
If none of the above are deleted, the estate being sold is the first option of freehold.

Legal Description:

Area (more or less):	*Lot/Flat/Unit:*	*DP:*	*Record of Title (unique identifier):*
424m2	620	581780	1086840

Copyright
February 2022
Auckland District Law Society Inc & Real Estate Institute of New Zealand Inc

PAYMENT OF PURCHASE PRICE
Purchase price: $ 343,000

~~Plus GST (if any) OR~~ Inclusive of GST (if any)
If neither is deleted, the purchase price includes GST (if any).

GST date (refer clause 13.0):

Deposit (refer clause 2.0): $ 10,000

Balance of purchase price to be paid or satisfied as follows:
~~(1) By payment in cleared funds on the settlement date which is:~~
OR
(2) In the manner described in the Further Terms of Sale.

Interest rate for late settlement: 15 % p.a.

~~CONDITIONS (refer clause 9.0)~~
~~Finance required (clause 9.1):~~ ~~Yes/No~~
~~Finance date:~~
~~LIM required (clause 9.2):~~ ~~Yes/No~~
~~Building report required (clause 9.4):~~ ~~Yes/No~~
~~Toxicology report required (clause 9.5):~~ ~~Yes/No~~
~~OIA consent required (clause 9.6):~~ ~~Yes/No~~
~~OIA date (clause 9.8):~~
~~Land Act consent required (clause 9.7):~~ ~~Yes/No~~
~~Land Act date (clause 9.8):~~

~~TENANCIES~~ ~~Yes/No~~
~~Particulars of any tenancies are set out in Schedule 3 or another schedule attached to this agreement by the parties.~~

It is agreed that the vendor sells and the purchaser purchases the property, and any chattels listed, on the terms and conditions of this agreement.

© AUCKLAND DISTRICT LAW SOCIETY INC. & REAL ESTATE INSTITUTE OF NEW ZEALAND INC. All Rights Reserved. See full terms of copyright on the back page.

SDC - Approved Building Consent Document - BC230326-Amendment 1 - Pg 32 of 61 - 29/09/2023 - steven.burnham

GENERAL TERMS OF SALE

SDC - Approved Building Consent Document - BC230326-Amendment 1 - Pg 33 of 61 - 29/09/2023 - steven.burnham

1.0 Definitions, time for performance, notices, and interpretation

1.1 Definitions

(1) Unless the context requires a different interpretation, words and phrases not otherwise defined have the same meanings ascribed to those words and phrases in the Goods and Services Tax Act 1985, the Property Law Act 2007, the Resource Management Act 1991 or the Unit Titles Act 2010.

(2) "Accessory unit", "owner", "principal unit", "unit", and "unit plan" have the meanings ascribed to those terms in the Unit Titles Act.

(3) "Agreement" means this document including the front page, these General Terms of Sale, any Further Terms of Sale, and any schedules and attachments.

(4) "Associated person", "conveyancer", "offshore RLWT person", "residential land purchase amount", "RLWT", "RLWT certificate of exemption" and "RLWT rules" have the meanings ascribed to those terms in the Income Tax Act 2007.

(5) "Building", "building consent", "code compliance certificate", "commercial on-seller", "compliance schedule" and "household unit" have the meanings ascribed to those terms in the Building Act.

(6) "Building Act" means the Building Act 1991 and/or the Building Act 2004.

(7) "Building warrant of fitness" means a building warrant of fitness supplied to a territorial authority under the Building Act.

(8) "Cleared funds" means an electronic transfer of funds that has been made strictly in accordance with the requirements set out in the PLS Guidelines.

(9) "Commissioner" has the meaning ascribed to that term in the Tax Administration Act 1994.

(10) "Default GST" means any additional GST, penalty (civil or otherwise), interest, or other sum imposed on the vendor (or where the vendor is or was a member of a GST group its representative member) under the GST Act or the Tax Administration Act 1994 by reason of non-payment of any GST payable in respect of the supply made under this agreement but does not include any such sum levied against the vendor (or where the vendor is or was a member of a GST group its representative member) by reason of a default or delay by the vendor after payment of the GST to the vendor by the purchaser.

(11) "Electronic instrument" has the same meaning as ascribed to that term in the Land Transfer Act 2017.

(12) "Going concern", "goods", "principal place of residence", "recipient", "registered person", "registration number", "supply", "taxable activity" and "taxable supply" have the meanings ascribed to those terms in the GST Act.

(13) "GST" means Goods and Services Tax arising pursuant to the Goods and Services Tax Act 1985 and "GST Act" means the Goods and Services Tax Act 1985.

(14) "Landonline Workspace" means an electronic workspace facility approved by the Registrar-General of Land pursuant to the provisions of the Land Transfer Act 2017.

(15) "Leases" means any tenancy agreement, agreement to lease (if applicable), lease, sublease, or licence to occupy in respect of the property, and includes any receipt or other evidence of payment of any bond and any formal or informal document or letter evidencing any variation, renewal, extension, review, or assignment.

(16) "LIM" means a land information memorandum issued pursuant to the Local Government Official Information and Meetings Act 1987.

(17) "LINZ" means Land Information New Zealand.

(18) "Local authority" means a territorial authority or a regional council.

(19) "OIA consent" means consent to purchase the property under the Overseas Investment Act 2005.

(20) "PLS Guidelines" means the most recent edition, as at the date of this agreement, of the New Zealand Law Society Property Law Section Guidelines, issued by the New Zealand Law Society.

(21) "Proceedings" means any application to any court or tribunal or any referral or submission to mediation, adjudication or arbitration or any other dispute resolution procedure.

(22) "Property" means the property described in this agreement.

(23) "Purchase price" means the total purchase price stated in this agreement which the purchaser has agreed to pay the vendor for the property and the chattels included in the sale.

(24) "Purchase price allocation" means an allocation of the purchase price, and (if applicable) any other consideration for the property and the chattels included in the sale, to the property, chattels or any part thereof that affects a person's tax position under the Income Tax Act 2007 and/or the GST Act.

(25) "Regional council" means a regional council within the meaning of the Local Government Act 2002.

(26) "Remote settlement" means settlement of the sale and purchase of the property by way of the purchaser's lawyer paying the moneys due and payable on the settlement date directly into the trust account of the vendor's lawyer, in consideration of the vendor agreeing to meet the vendor's obligations under clause 3.8(2), pursuant to the protocol for remote settlement recommended in the PLS Guidelines.

(27) "Residential (but not otherwise sensitive) land" has the meaning ascribed to that term in the Overseas Investment Act 2005.

(28) "Rules" means body corporate operational rules under the Unit Titles Act.

(29) "Secure web document exchange" means an electronic messaging service enabling messages and electronic documents to be posted by one party to a secure website to be viewed by the other party immediately after posting.

(30) "Settlement" means (unless otherwise agreed by the parties in writing) the moment in time when the vendor and purchaser have fulfilled their obligations under clause 3.8.

(31) "Settlement date" means the date specified as such in this agreement.

(32) "Settlement statement" means a statement showing the purchase price, plus any GST payable by the purchaser in addition to the purchase price, less any deposit or other payments or allowances to be credited to the purchaser, together with apportionments of all incomings and outgoings apportioned at the settlement date.

(33) "Tax information" and "tax statement" have the meanings ascribed to those terms in the Land Transfer Act 2017.

(34) "Territorial authority" means a territorial authority within the meaning of the Local Government Act 2002.

(35) "Title" includes where appropriate a record of title within the meaning of the Land Transfer Act 2017.

© ADLS & REINZ. All Rights Reserved.

SDC - Approved Building Consent Document - BC230326-Amendment 1 - Pg 34 of 61 - 29/09/2023 - steven.burnham

(36) "Unit title" means a unit title under the Unit Titles Act.
(37) "Unit Titles Act" means the Unit Titles Act 2010.
(38) "Working day" means any day of the week other than:
(a) Saturday, Sunday, Waitangi Day, Good Friday, Easter Monday, Anzac Day, the Sovereign's Birthday and Labour Day;
(b) if Waitangi Day or Anzac Day falls on a Saturday or Sunday, the following Monday;
(c) a day in the period commencing on the 24th day of December in any year and ending on the 5th day of January (or in the case of clause 9.3(2) the 15th day of January) in the following year, both days inclusive; and
(d) the day observed as the anniversary of any province in which the property is situated.

A working day shall be deemed to commence at 9.00 am and to terminate at 5.00 pm.

1.2 Unless a contrary intention appears on the front page or elsewhere in this agreement:
(1) the interest rate for late settlement is equivalent to the interest rate charged by the Inland Revenue Department on unpaid tax under the Tax Administration Act 1994 during the period for which the interest rate for late settlement is payable, plus 5% per annum; and
(2) a party is in default if it did not do what it has contracted to do to enable settlement to occur, regardless of the cause of such failure.

1.3 Time for Performance
(1) Where the day nominated for settlement or the fulfilment of a condition is not a working day, then the settlement date or the date for fulfilment of the condition shall be the last working day before the day so nominated.
(2) Any act done pursuant to this agreement by a party, including service of notices, after 5.00 pm on a working day, or on a day that is not a working day, shall be deemed to have been done at 9.00 am on the next succeeding working day.
(3) Where two or more acts done pursuant to this agreement, including service of notices, are deemed to have been done at the same time, they shall take effect in the order in which they would have taken effect but for clause 1.3(2).

1.4 Notices
The following apply to all notices between the parties relevant to this agreement, whether authorised by this agreement or by the general law:
(1) All notices must be served in writing.
(2) Any notice under section 28 of the Property Law Act 2007, where the purchaser is in possession of the property, must be served in accordance with section 353 of that Act.
(3) All other notices, unless otherwise required by the Property Law Act 2007, must be served by one of the following means:
(a) on the party as authorised by sections 354 to 361 of the Property Law Act 2007, or
(b) on the party or on the party's lawyer:
(i) by personal delivery; or
(ii) by posting by ordinary mail; or
(iii) by email; or
(iv) in the case of the party's lawyer only, by sending by document exchange or, if both parties' lawyers have agreed to subscribe to the same secure web document exchange for this agreement, by secure web document exchange.
(4) In respect of the means of service specified in clause 1.4(3)(b), a notice is deemed to have been served:
(a) in the case of personal delivery, when received by the party or at the lawyer's office;
(b) in the case of posting by ordinary mail, on the third working day following the date of posting to the address for service notified in writing by the party or to the postal address of the lawyer's office;
(c) in the case of email:
(i) when sent to the email address provided for the party or the party's lawyer on the back page; or
(ii) any other email address notified subsequently in writing by the party or the party's lawyer (which shall supersede the email address on the back page); or
(iii) if no such email address is provided on the back page or notified subsequently in writing, the office email address of the party's lawyer's firm appearing on the firm's letterhead or website;
(d) in the case of sending by document exchange, on the second working day following the date of sending to the document exchange number of the lawyer's office;
(e) in the case of sending by secure web document exchange, on the first working day following the date of sending to the secure web document exchange.
(5) Any period of notice required to be given under this agreement shall be computed by excluding the day of service.

1.5 Interpretation and Execution
(1) If there is more than one vendor or purchaser, the liability of the vendors or of the purchasers, as the case may be, is joint and several.
(2) Where the purchaser executes this agreement with provision for a nominee, or as agent for an undisclosed or disclosed but unidentified principal, or on behalf of a company to be formed, the purchaser shall at all times remain liable for all obligations on the part of the purchaser.
(3) If any inserted term (including any Further Terms of Sale) conflicts with the General Terms of Sale the inserted term shall prevail.
(4) Headings are for information only and do not form part of this agreement.
(5) References to statutory provisions shall be construed as references to those provisions as they may be amended or re-enacted or as their application is modified by other provisions from time to time.
(6) Reference to a party's lawyer includes reference to a conveyancing practitioner (as defined in the Lawyers and Conveyancers Act 2006), engaged by that party, provided that all actions of that conveyancing practitioner (including without limitation any actions in respect of any undertaking or in respect of settlement) must strictly accord with the PLS Guidelines.

© ADLS & REINZ. All Rights Reserved.

SDC - Approved Building Consent Document - BC230326-Amendment 1 - Pg 35 of 61 - 29/09/2023 - steven.burnham

2.0 Deposit

2.1 The purchaser shall pay the deposit to the vendor or the vendor's agent immediately upon execution of this agreement by both parties and/or at such other time as is specified in this agreement.

2.2 If the deposit is not paid on the due date for payment, the vendor may at any time thereafter serve on the purchaser notice requiring payment. If the purchaser fails to pay the deposit on or before the third working day after service of the notice, time being of the essence, the vendor may cancel this agreement by serving notice of cancellation on the purchaser. No notice of cancellation shall be effective if the deposit has been paid before the notice of cancellation is served.

2.3 The deposit shall be in part payment of the purchase price.

2.4 The person to whom the deposit is paid shall hold it as a stakeholder until:

(1) the requisition procedure under clause 6.0 is completed without either party cancelling this agreement; and

(2) where this agreement is entered into subject to any condition(s) expressed in this agreement, each such condition has been fulfilled or waived; and

(3) where the property is a unit title:

(a) a pre-settlement disclosure statement, certified correct by the body corporate, under section 147 of the Unit Titles Act; and

(b) an additional disclosure statement under section 148 of the Unit Titles Act (if requested by the purchaser within the time prescribed in section 148(2)),

have been provided to the purchaser by the vendor within the times prescribed in those sections or otherwise the purchaser has given notice under section 149(2) of the Unit Titles Act to postpone the settlement date until after the disclosure statements have been provided; or

(4) this agreement is:

(a) cancelled pursuant to:

(i) clause 6.2(3)(c); or

(ii) sections 36 or 37 of the Contract and Commercial Law Act 2017; or

(b) avoided pursuant to clause 9.10(5); or

(5) where the property is a unit title and the purchaser, having the right to cancel this agreement pursuant to section 151(2) of the Unit Titles Act, has cancelled this agreement pursuant to that section, or has elected not to cancel by giving notice to the vendor, or by completing settlement of the purchase.

2.5 Where the person to whom the deposit is paid is a real estate agent, the period for which the agent must hold the deposit as a stakeholder pursuant to clause 2.4 shall run concurrently with the period for which the agent must hold the deposit under section 123 of the Real Estate Agents Act 2008, but the agent must hold the deposit for the longer of those two periods, or such lesser period as is agreed between the parties in writing as required by section 123 of the Real Estate Agents Act 2008, but in no event shall the deposit be released prior to the expiry of the requisition period under clause 6.0, unless the requisition period is expressly waived in writing after the effect of the same is explained to the purchaser by the agent or by the purchaser's lawyer or conveyancer.

3.0 Possession and Settlement

Possession

3.1 Unless particulars of a tenancy are included in this agreement, the property is sold with vacant possession and the vendor shall so yield the property on the settlement date.

3.2 If the property is sold with vacant possession, then subject to the rights of any tenants of the property, the vendor shall permit the purchaser or any person authorised by the purchaser in writing, upon reasonable notice:

(1) to enter the property on one occasion prior to the settlement date for the purposes of examining the property, chattels and fixtures which are included in the sale; and

(2) to re-enter the property no later than the day prior to the settlement date to confirm compliance by the vendor with any agreement made by the vendor to carry out any work on the property, the chattels and the fixtures.

3.3 Possession shall be given and taken on the settlement date. Outgoings and incomings in respect of the settlement date are the responsibility of and belong to the vendor.

3.4 On the settlement date, the vendor shall make available to the purchaser keys to all exterior doors that are locked by key, electronic door openers to all doors that are opened electronically, and the keys and/or security codes to any alarms. The vendor does not have to make available keys, electronic door openers, and security codes where the property is tenanted and these are held by the tenant.

Settlement

3.5 The vendor shall prepare, at the vendor's own expense, a settlement statement. The vendor shall tender the settlement statement to the purchaser or the purchaser's lawyer a reasonable time prior to the settlement date.

3.6 The purchaser's lawyer shall:

(1) within a reasonable time prior to the settlement date create a Landonline Workspace for the transaction, notify the vendor's lawyer of the dealing number allocated by LINZ, and prepare in that workspace a transfer instrument in respect of the property; and

(2) prior to settlement:

(a) lodge in that workspace the tax information contained in the transferee's tax statement; and

(b) certify and sign the transfer instrument.

3.7 The vendor's lawyer shall:

(1) within a reasonable time prior to the settlement date prepare in that workspace all other electronic instruments required to confer title on the purchaser in terms of the vendor's obligations under this agreement; and

(2) prior to settlement:

(a) lodge in that workspace the tax information contained in the transferor's tax statement; and

(b) have those instruments and the transfer instrument certified, signed and, where possible, pre-validated.

© ADLS & REINZ. All Rights Reserved.

RP

SDC - Approved Building Consent Document - BC230326-Amendment 1 - Pg 36 of 61 - 29/09/2023 - steven.burnham

3.8 On the settlement date:

(1) the balance of the purchase price, interest and other moneys, if any, shall be paid by the purchaser in cleared funds or otherwise satisfied as provided in this agreement (credit being given for any amount payable by the vendor under clause 3.12 or 3.13, or for any deduction allowed to the purchaser under clause 5.2, or for any compensation agreed by the vendor in respect of a claim made by the purchaser pursuant to clause 10.2(1), or for any interim amount the purchaser is required to pay to a stakeholder pursuant to clause 10.8);

(2) the vendor's lawyer shall immediately thereafter:

(a) release or procure the release of the transfer instrument and the other instruments mentioned in clause 3.7(1) so that the purchaser's lawyer can then submit them for registration;

(b) pay to the purchaser's lawyer the LINZ registration fees on all of the instruments mentioned in clause 3.7(1), unless these fees will be invoiced to the vendor's lawyer by LINZ directly; and

(c) deliver to the purchaser's lawyer any other documents that the vendor must provide to the purchaser on settlement in terms of this agreement, including where this agreement provides for the property to be sold tenanted, all leases relating to the tenancy that are held by the vendor and a notice from the vendor to each tenant advising them of the sale of the property and directing them to pay to the purchaser as landlord, in such manner as the purchaser may prescribe, all rent or other moneys payable under the leases.

3.9 All obligations under clause 3.8 are interdependent.

3.10 The parties shall complete settlement by way of remote settlement in accordance with the PLS Guidelines. Where the purchaser considers it is necessary or desirable to tender settlement, this may be effected (in addition to any other valid form of tender) by the purchaser's lawyer providing to the vendor's lawyer a written undertaking that:

(1) the purchaser is ready, willing, and able to settle;

(2) the purchaser's lawyer has certified and signed the transfer instrument and any other instruments in the Landonline Workspace for the transaction that must be signed on behalf of the purchaser; and

(3) the purchaser's lawyer holds in their trust account in cleared funds the amount that the purchaser must pay on settlement.

Last-Minute Settlement

3.11 If due to the delay of the purchaser, settlement takes place between 4.00 pm and 5.00 pm on the settlement date ("last-minute settlement"), the purchaser shall pay the vendor:

(1) one day's interest at the interest rate for late settlement on the portion of the purchase price paid in the last-minute settlement; and

(2) if the day following the last-minute settlement is not a working day, an additional day's interest (calculated in the same manner) for each day until, but excluding, the next working day.

Purchaser Default: Late Settlement

3.12 If any portion of the purchase price is not paid upon the due date for payment, then, provided that the vendor provides reasonable evidence of the vendor's ability to perform any obligation the vendor is obliged to perform on that date in consideration for such payment:

(1) the purchaser shall pay to the vendor interest at the interest rate for late settlement on the portion of the purchase price so unpaid for the period from the due date for payment until payment ("the default period"); but nevertheless, this stipulation is without prejudice to any of the vendor's rights or remedies including any right to claim for additional expenses and damages. For the purposes of this clause, a payment made on a day other than a working day or after the termination of a working day shall be deemed to be made on the next following working day and interest shall be computed accordingly; and

(2) the vendor is not obliged to give the purchaser possession of the property or to pay the purchaser any amount for remaining in possession, unless this agreement relates to a tenanted property, in which case the vendor must elect either to:

(a) account to the purchaser on settlement for incomings in respect of the property which are payable and received during the default period, in which event the purchaser shall be responsible for the outgoings relating to the property during the default period; or

(b) retain such incomings in lieu of receiving interest from the purchaser pursuant to clause 3.12(1).

(3) If the parties are unable to agree upon any amount payable under this clause 3.12, either party may make a claim under clause 10.0.

Vendor Default: Late Settlement or Failure to Give Possession

3.13 (1) For the purposes of this clause 3.13:

(a) the default period means:

(i) in clause 3.13(2), the period from the settlement date until the date when the vendor is able and willing to provide vacant possession and the purchaser takes possession; and

(ii) in clause 3.13(3), the period from the date the purchaser takes possession until the date when settlement occurs; and

(iii) in clause 3.13(5), the period from the settlement date until the date when settlement occurs; and

(b) the vendor shall be deemed to be unwilling to give possession if the vendor does not offer to give possession.

(2) If this agreement provides for vacant possession but the vendor is unable or unwilling to give vacant possession on the settlement date, then, provided that the purchaser provides reasonable evidence of the purchaser's ability to perform the purchaser's obligations under this agreement:

(a) the vendor shall pay the purchaser, at the purchaser's election, either:

(i) compensation for any reasonable costs incurred for temporary accommodation for persons and storage of chattels during the default period; or

(ii) an amount equivalent to interest at the interest rate for late settlement on the entire purchase price during the default period; and

© ADLS & REINZ. All Rights Reserved.

RP

SDC - Approved Building Consent Document - BC230326-Amendment 1 - Pg 37 of 61 - 29/09/2023 - steven.burnham

(b) the purchaser shall pay the vendor an amount equivalent to the interest earned or which would be earned on overnight deposits lodged in the purchaser's lawyer's trust bank account on such portion of the purchase price (including any deposit) as is payable under this agreement on or by the settlement date but remains unpaid during the default period less:
(i) any withholding tax; and
(ii) any bank or legal administration fees and commission charges; and
(iii) any interest payable by the purchaser to the purchaser's lender during the default period in respect of any mortgage or loan taken out by the purchaser in relation to the purchase of the property.

(3) If this agreement provides for vacant possession and the vendor is able and willing to give vacant possession on the settlement date, then, provided the purchaser provides reasonable evidence of the purchaser's ability to perform the purchaser's obligations under this agreement, the purchaser may elect to take possession in which case the vendor shall not be liable to pay any interest or other moneys to the purchaser but the purchaser shall pay the vendor the same amount as that specified in clause 3.13(2)(b) during the default period. A purchaser in possession under this clause 3.13(3) is a licensee only.

(4) Notwithstanding the provisions of clause 3.13(3), the purchaser may elect not to take possession when the purchaser is entitled to take it. If the purchaser elects not to take possession, the provisions of clause 3.13(2) shall apply as though the vendor were unable or unwilling to give vacant possession on the settlement date.

(5) If this agreement provides for the property to be sold tenanted then, provided that the purchaser provides reasonable evidence of the purchaser's ability to perform the purchaser's obligations under this agreement, the vendor shall on settlement account to the purchaser for incomings which are payable and received in respect of the property during the default period less the outgoings paid by the vendor during that period. Apart from accounting for such incomings, the vendor shall not be liable to pay any other moneys to the purchaser but the purchaser shall pay the vendor the same amount as that specified in clause 3.13(2)(b) during the default period.

(6) The provisions of this clause 3.13 shall be without prejudice to any of the purchaser's rights or remedies including any right to claim for any additional expenses and damages suffered by the purchaser.

(7) If the parties are unable to agree upon any amount payable under this clause 3.13, either party may make a claim under clause 10.0.

Deferment of Settlement and Possession

3.14 If
(1) this is an agreement for the sale by a commercial on-seller of a household unit; and
(2) a code compliance certificate has not been issued by the settlement date in relation to the household unit,
then, unless the parties agree otherwise (in which case the parties shall enter into a written agreement in the form (if any) prescribed by the Building (Forms) Regulations 2004), the settlement date shall be deferred to the fifth working day following the date upon which the vendor has given the purchaser notice that the code compliance certificate has been issued (which notice must be accompanied by a copy of the certificate).

3.15 In every case, if neither party is ready, willing, and able to settle on the settlement date, the settlement date shall be deferred to the third working day following the date upon which one of the parties gives notice it has become ready, willing, and able to settle.

3.16 If
(1) the property is a unit title;
(2) the settlement date is deferred pursuant to either clause 3.14 or clause 3.15; and
(3) the vendor considers on reasonable grounds that an extension of time is necessary or desirable in order for the vendor to comply with the warranty by the vendor in clause 8.2(3),
then the vendor may extend the settlement date:
(a) where there is a deferment of the settlement date pursuant to clause 3.14, to the tenth working day after the date upon which the vendor gives the purchaser notice that the code compliance certificate has been issued, provided the vendor gives notice of the extension to the purchaser no later than the second working day after such notice; or
(b) where there is a deferment of the settlement date pursuant to clause 3.15, to the tenth working day after the date upon which one of the parties gives notice that it has become ready, willing, and able to settle, provided the vendor gives notice of the extension to the purchaser no later than the second working day after such notice.

New Title Provision

3.17 (1) Where
(a) the transfer of the property is to be registered against a new title yet to be issued; and
(b) a search copy, as defined in section 60 of the Land Transfer Act 2017, of that title is not obtainable by the tenth working day prior to the settlement date,
then, unless the purchaser elects that settlement shall still take place on the agreed settlement date, the settlement date shall be deferred to the tenth working day after the later of the date on which:
(i) the vendor has given the purchaser notice that a search copy is obtainable; or
(ii) the requisitions procedure under clause 6.0 is complete.

(2) Clause 3.17(1) shall not apply where it is necessary to register the transfer of the property to enable a plan to be deposited and title to the property to be issued.

4.0 Residential Land Withholding Tax

4.1 If the vendor does not have a conveyancer or the vendor and the purchaser are associated persons, then:
(1) the vendor must provide the purchaser or the purchaser's conveyancer, on or before the second working day before the due date for payment of the first residential land purchase amount payable under this agreement, with:
(a) sufficient information to enable the purchaser or the purchaser's conveyancer to determine to their reasonable satisfaction whether section 54C of the Tax Administration Act 1994 applies to the sale of the property; and

© ADLS & REINZ. All Rights Reserved.

12 RP MP

SDC - Approved Building Consent Document - BC230326-Amendment 1 - Pg 38 of 61 - 29/09/2023 - steven.burnham

(b) if the purchaser or the purchaser's conveyancer determines to their reasonable satisfaction that section 54C of the Tax Administration Act 1994 does apply, all of the information required by that section and either an RLWT certificate of exemption in respect of the sale or otherwise such other information that the purchaser or the purchaser's conveyancer may reasonably require to enable the purchaser or the purchaser's conveyancer to determine to their reasonable satisfaction the amount of RLWT that must be withheld from each residential land purchase amount;

(2) the vendor shall be liable to pay any costs reasonably incurred by the purchaser or the purchaser's conveyancer in relation to RLWT, including the cost of obtaining professional advice in determining whether there is a requirement to withhold RLWT and the amount of RLWT that must be withheld, if any; and

(3) any payments payable by the purchaser on account of the purchase price shall be deemed to have been paid to the extent that:

(a) RLWT has been withheld from those payments by the purchaser or the purchaser's conveyancer as required by the RLWT rules; and

(b) any costs payable by the vendor under clause 4.1(2) have been deducted from those payments by the purchaser or the purchaser's conveyancer.

4.2 If the vendor does not have a conveyancer or the vendor and the purchaser are associated persons and if the vendor fails to provide the information required under clause 4.1(1), then the purchaser may:

(1) defer the payment of the first residential land purchase amount payable under this agreement (and any residential land purchase amount that may subsequently fall due for payment) until such time as the vendor supplies that information; or

(2) on the due date for payment of that residential land purchase amount, or at any time thereafter if payment has been deferred by the purchaser pursuant to this clause and the vendor has still not provided that information, treat the sale of the property as if it is being made by an offshore RLWT person where there is a requirement to pay RLWT.

4.3 If pursuant to clause 4.2 the purchaser treats the sale of the property as if it is being made by an offshore RLWT person where there is a requirement to pay RLWT, the purchaser or the purchaser's conveyancer may:

(1) make a reasonable assessment of the amount of RLWT that the purchaser or the purchaser's conveyancer would be required by the RLWT rules to withhold from any residential land purchase amount if the sale is treated in that manner; and

(2) withhold that amount from any residential land purchase amount and pay it to the Commissioner as RLWT.

4.4 Any amount withheld by the purchaser or the purchaser's conveyancer pursuant to clause 4.3 shall be treated as RLWT that the purchaser or the purchaser's conveyancer is required by the RLWT rules to withhold.

4.5 The purchaser or the purchaser's conveyancer shall give notice to the vendor a reasonable time before payment of any sum due to be paid on account of the purchase price of:

(1) the costs payable by the vendor under clause 4.1(2) that the purchaser or the purchaser's conveyancer intends to deduct; and

(2) the amount of RLWT that the purchaser or the purchaser's conveyancer intends to withhold.

5.0 Risk and insurance

5.1 The property and chattels shall remain at the risk of the vendor until possession is given and taken.

5.2 If, prior to the giving and taking of possession, the property is destroyed or damaged, and such destruction or damage has not been made good by the settlement date, then the following provisions shall apply:

(1) if the destruction or damage has been sufficient to render the property untenantable and it is untenantable on the settlement date, the purchaser may:

(a) complete the purchase at the purchase price, less a sum equal to any insurance moneys received or receivable by or on behalf of the vendor in respect of such destruction or damage, provided that no reduction shall be made to the purchase price if the vendor's insurance company has agreed to reinstate for the benefit of the purchaser to the extent of the vendor's insurance cover; or

(b) cancel this agreement by serving notice on the vendor in which case the vendor shall return to the purchaser immediately the deposit and any other moneys paid by the purchaser, and neither party shall have any right or claim against the other arising from this agreement or its cancellation;

(2) if the property is not untenantable on the settlement date, the purchaser shall complete the purchase at the purchase price less a sum equal to the amount of the diminution in value of the property which, to the extent that the destruction or damage to the property can be made good, shall be deemed to be equivalent to the reasonable cost of reinstatement or repair;

(3) if the property is zoned for rural purposes under an operative District Plan, damage to the property shall be deemed to have rendered the property untenantable where the diminution in value exceeds an amount equal to 20% of the purchase price; and

(4) if the amount of the diminution in value is disputed, the parties shall follow the same procedure as that set out in clause 10.8 for when an amount of compensation is disputed.

5.3 The purchaser shall not be required to take over any insurance policies held by the vendor.

6.0 Title, boundaries and requisitions

6.1 The vendor shall not be bound to point out the boundaries of the property except that on the sale of a vacant residential lot which is not limited as to parcels the vendor shall ensure that all boundary markers required by the Cadastral Survey Act 2002 and any related rules and regulations to identify the boundaries of the property are present in their correct positions at the settlement date.

6.2 (1) The purchaser is deemed to have accepted the vendor's title except as to objections or requisitions which the purchaser is entitled to make and notice of which the purchaser serves on the vendor on or before the earlier of:

(a) the tenth working day after the date of this agreement; or

(b) the settlement date.

© ADLS & REINZ. All Rights Reserved.

SDC - Approved Building Consent Document - BC230326-Amendment 1 - Pg 39 of 61 - 29/09/2023 - steven.burnham

(2) Where the transfer of the property is to be registered against a new title yet to be issued, the purchaser is deemed to have accepted the title except as to such objections or requisitions which the purchaser is entitled to make and notice of which the purchaser serves on the vendor on or before the fifth working day following the date the vendor has given the purchaser notice that the title has been issued and a search copy of it as defined in section 60 of the Land Transfer Act 2017 is obtainable.

(3) If the vendor is unable or unwilling to remove or comply with any objection or requisition as to title, notice of which has been served on the vendor by the purchaser, then the following provisions will apply:

(a) the vendor shall notify the purchaser ("a vendor's notice") of such inability or unwillingness on or before the fifth working day after the date of service of the purchaser's notice;

(b) if the vendor does not give a vendor's notice the vendor shall be deemed to have accepted the objection or requisition and it shall be a requirement of settlement that such objection or requisition shall be complied with before settlement;

(c) if the purchaser does not on or before the fifth working day after service of a vendor's notice notify the vendor that the purchaser waives the objection or requisition, either the vendor or the purchaser may (notwithstanding any intermediate negotiations) by notice to the other, cancel this agreement.

6.3 In the event of cancellation under clause 6.2(3), the purchaser shall be entitled to the immediate return of the deposit and any other moneys paid under this agreement by the purchaser and neither party shall have any right or claim against the other arising from this agreement or its cancellation. In particular, the purchaser shall not be entitled to any interest or to the expense of investigating the title or to any compensation whatsoever.

6.4 (1) If the title to the property being sold is a cross-lease title or a unit title and there are:

(a) in the case of a cross-lease title:

(i) alterations to the external dimensions of any leased structure; or

(ii) buildings or structures not intended for common use which are situated on any part of the land that is not subject to a restricted use covenant;

(b) in the case of a unit title, encroachments out of the principal unit or accessory unit title space (as the case may be):

then the purchaser may requisition the title under clause 6.2 requiring the vendor:

(c) in the case of a cross-lease title, to deposit a new plan depicting the buildings or structures and register a new cross-lease or cross-leases (as the case may be) and any other ancillary dealings in order to convey good title; or

(d) in the case of a unit title, to deposit an amendment to the unit plan, a redevelopment plan or new unit plan (as the case may be) depicting the principal and/or accessory units and register such transfers and any other ancillary dealings in order to convey good title.

(2) The words "alterations to the external dimensions of any leased structure" shall only mean alterations which are attached to the leased structure and enclosed.

6.5 The vendor shall not be liable to pay for or contribute towards the expense of erection or maintenance of any fence between the property and any contiguous land of the vendor but this proviso shall not enure for the benefit of any subsequent purchaser of the contiguous land; and the vendor shall be entitled to require the inclusion of a fencing covenant to this effect in any transfer of the property.

7.0 Vendor's warranties and undertakings

7.1 The vendor warrants and undertakes that at the date of this agreement the vendor has not:

(1) received any notice or demand and has no knowledge of any requisition or outstanding requirement:

(a) from any local or government authority or other statutory body; or

(b) under the Resource Management Act 1991; or

(c) from any tenant of the property; or

(d) from any other party; or

(2) given any consent or waiver,

which directly or indirectly affects the property and which has not been disclosed in writing to the purchaser.

7.2 The vendor warrants and undertakes that at the date of this agreement the vendor has no knowledge or notice of any fact which might result in proceedings being instituted by or against the vendor or the purchaser in respect of the property.

7.3 The vendor warrants and undertakes that at settlement:

(1) The chattels included in the sale listed in Schedule 2 and all plant, equipment, systems or devices which provide any services or amenities to the property, including, without limitation, security, heating, cooling, or air-conditioning, are delivered to the purchaser in reasonable working order, but in all other respects in their state of repair as at the date of this agreement (fair wear and tear excepted) but failure to do so shall only create a right of compensation.

(2) All electrical and other installations on the property are free of any charge whatsoever and all chattels included in the sale are the unencumbered property of the vendor.

(3) There are no arrears of rates, water rates or charges outstanding on the property and where the property is subject to a targeted rate that has been imposed as a means of repayment of any loan, subsidy or other financial assistance made available by or through the local authority, the amount required to remove the imposition of that targeted rate has been paid.

(4) Where an allowance has been made by the vendor in the settlement statement for incomings receivable, the settlement statement correctly records those allowances including, in particular, the dates up to which the allowances have been made.

(5) Where the vendor has done or caused or permitted to be done on the property any works:

(a) any permit, resource consent, or building consent required by law was obtained; and

(b) to the vendor's knowledge, the works were completed in compliance with those permits or consents; and

(c) where appropriate, a code compliance certificate was issued for those works.

(6) Where under the Building Act, any building on the property sold requires a compliance schedule:

(a) the vendor has fully complied with any requirements specified in any compliance schedule issued by a territorial authority under the Building Act in respect of the building;

(b) the building has a current building warrant of fitness; and

© ADLS & REINZ. All Rights Reserved.

RP

MP

SDC - Approved Building Consent Document - BC230326-Amendment 1 - Pg 40 of 61 - 29/09/2023 - steven.burnham

(c) the vendor is not aware of any reason, that the vendor has not disclosed in writing to the purchaser, which would prevent a building warrant of fitness from being supplied to the territorial authority when the building warrant of fitness is next due.

(7) Since the date of this agreement, the vendor has not given any consent or waiver which directly or indirectly affects the property.

(8) Any notice or demand received by the vendor, which directly or indirectly affects the property, after the date of this agreement:
(a) from any local or government authority or other statutory body; or
(b) under the Resource Management Act 1991; or
(c) from any tenant of the property; or
(d) from any other party,
has been delivered forthwith by the vendor to either the purchaser or the purchaser's lawyer, unless the vendor has paid or complied with such notice or demand. If the vendor fails to so deliver or pay the notice or demand, the vendor shall be liable for any penalty incurred.

7.4 If the property is or includes part only of a building, the warranty and undertaking in clause 7.3(6) does not apply. Instead the vendor warrants and undertakes at the date of this agreement that, where under the Building Act the building of which the property forms part requires a compliance schedule:
(1) to the vendor's knowledge, there has been full compliance with any requirements specified in any compliance schedule issued by a territorial authority under the Building Act in respect of the building;
(2) the building has a current building warrant of fitness; and
(3) the vendor is not aware of any reason, that the vendor has not disclosed in writing to the purchaser, which would prevent a building warrant of fitness from being supplied to the territorial authority when the building warrant of fitness is next due.

7.5 The vendor warrants and undertakes that on or immediately after settlement:
(1) If the water and wastewater charges are determined by meter, the vendor will have the water meter read and will pay the amount of the charge payable pursuant to that reading; but if the water supplier will not make special readings, the water and wastewater charges shall be apportioned.
(2) Any outgoings included in the settlement statement are paid in accordance with the settlement statement and, where applicable, to the dates shown in the settlement statement, or will be so paid immediately after settlement.
(3) The vendor will give notice of sale in accordance with the Local Government (Rating) Act 2002 to the territorial authority and regional council in whose district the land is situated and will also give notice of the sale to every other authority that makes and levies rates or charges on the land and to the supplier of water.
(4) Where the property is a unit title, the vendor will notify the body corporate in writing of the transfer of the property and the name and address of the purchaser.

8.0 Unit title and cross-lease provisions

Unit Titles

8.1 If the property is a unit title, sections 144 to 153 of the Unit Titles Act require the vendor to provide to the purchaser a pre-contract disclosure statement, a pre-settlement disclosure statement and, if so requested by the purchaser, an additional disclosure statement.

8.2 If the property is a unit title, the vendor warrants and undertakes as follows:
(1) The information in the pre-contract disclosure statement provided to the purchaser was complete and correct.
(2) Apart from regular periodic contributions, no contributions have been levied or proposed by the body corporate that have not been disclosed in writing to the purchaser.
(3) Not less than five working days before the settlement date, the vendor will provide:
(a) a certificate of insurance for all insurances effected by the body corporate under the provisions of section 135 of the Unit Titles Act; and
(b) a pre-settlement disclosure statement from the vendor, certified correct by the body corporate, under section 147 of the Unit Titles Act. Any periodic contributions to the operating account shown in that pre-settlement disclosure statement shall be apportioned. There shall be no apportionment of contributions to any long-term maintenance fund, contingency fund or capital improvement fund.
(4) There are no other amounts owing by the vendor under any provision of the Unit Titles Act.
(5) There are no unsatisfied judgments against the body corporate and no proceedings have been instituted against or by the body corporate.
(6) No order or declaration has been made by any Court against the body corporate or the vendor under any provision of the Unit Titles Act.
(7) The vendor has no knowledge or notice of any fact which might result in:
(a) the vendor or the purchaser incurring any other liability under any provision of the Unit Titles Act; or
(b) any proceedings being instituted by or against the body corporate; or
(c) any order or declaration being sought against the body corporate or the vendor under any provision of the Unit Titles Act.
(8) The vendor is not aware of proposals to pass any body corporate resolution relating to its rules nor are there any unregistered changes to the body corporate rules which have not been disclosed in writing to the purchaser.
(9) No lease, licence, easement, or special privilege has been granted by the body corporate in respect of any part of the common property which has not been disclosed in writing to the purchaser.
(10) No resolution has been passed and no application has been made and the vendor has no knowledge of any proposal for:
(a) the transfer of the whole or any part of the common property;
(b) the addition of any land to the common property;
(c) the cancellation of the unit plan;

© ADLS & REINZ. All Rights Reserved.

RP

SDC - Approved Building Consent Document - BC230326-Amendment 1 - Pg 41 of 61 - 29/09/2023 - steven.burnham

(d) the deposit of an amendment to the unit plan, a redevelopment plan, or a new unit plan in substitution for the existing unit plan; or

(e) any change to utility interest or ownership interest for any unit on the unit plan,

which has not been disclosed in writing to the purchaser.

(11) As at settlement, all contributions and other moneys payable by the vendor to the body corporate have been paid in full.

8.3 If the property is a unit title and if the vendor does not provide the certificates of insurance and the pre-settlement disclosure statement under section 147 of the Unit Titles Act in accordance with the requirements of clause 8.2(3), then in addition to the purchaser's rights under sections 149 and 150 of the Unit Titles Act, the purchaser may:

(1) postpone the settlement date until the fifth working day following the date on which that information is provided to the purchaser; or

(2) elect that settlement shall still take place on the settlement date.

8.4 If the property is a unit title, each party specifies that:

(1) any email address of that party's lawyer provided on the back page of this agreement, or notified subsequently in writing by that party's lawyer shall be an address for service for that party for the purposes of section 205(1)(d) of the Unit Titles Act; and

(2) if that party is absent from New Zealand, that party's lawyer shall be that party's agent in New Zealand for the purposes of section 205(2) of the Unit Titles Act.

8.5 If the property is a unit title, any costs owing by the purchaser to the vendor pursuant to section 148(5) of the Unit Titles Act for providing an additional disclosure statement shall be included in the moneys payable by the purchaser on settlement pursuant to clause 3.8(1). Such costs may be deducted from the deposit if the purchaser becomes entitled to a refund of the deposit upon cancellation or avoidance of this agreement.

8.6 Unauthorised Structures – Cross-Leases and Unit Titles

(1) Where structures (not stated in clause 6.0 to be requisitionable) have been erected on the property without:

(a) in the case of a cross-lease title, any required lessors' consent; or

(b) in the case of a unit title, any required body corporate consent,

the purchaser may demand within the period expiring on the earlier of:

(i) the tenth working day after the date of this agreement; or

(ii) the settlement date,

that the vendor obtain the written consent of the current lessors or the body corporate (as the case may be) to such improvements ("a current consent") and provide the purchaser with a copy of such consent on or before the settlement date.

(2) Should the vendor be unwilling or unable to obtain a current consent, then the procedure set out in clauses 6.2(3) and 6.3 shall apply, with the purchaser's demand under clause 8.6(1) being deemed to be an objection and requisition.

9.0 Conditions and mortgage terms

9.1 Finance condition

(1) If the purchaser has identified that finance is required on the front page of this agreement, this agreement is conditional upon the purchaser arranging finance for such amount as the purchaser may require from a bank or other lending institution of the purchaser's choice on terms and conditions satisfactory to the purchaser in all respects on or before the finance date shown on the front page of this agreement.

(2) If the purchaser avoids this agreement for failing to arrange finance in terms of clause 9.1(1), the purchaser must provide a satisfactory explanation of the grounds relied upon by the purchaser, together with supporting evidence, immediately upon request by the vendor.

9.2 Mortgage terms

(1) Any mortgage to be arranged pursuant to a finance condition shall be upon and subject to the terms and conditions currently being required by the lender in respect of loans of a similar nature.

9.3 LIM condition

(1) If the purchaser has indicated on the front page of this agreement that a LIM is required:

(a) that LIM is to be obtained by the purchaser at the purchaser's cost;

(b) the purchaser is to request the LIM on or before the fifth working day after the date of this agreement; and

(c) this agreement is conditional upon the purchaser approving that LIM, provided that such approval must not be unreasonably or arbitrarily withheld.

(2) If, on reasonable grounds, the purchaser does not approve the LIM, the purchaser shall give notice to the vendor ("the purchaser's notice") on or before the fifteenth working day after the date of this agreement stating the particular matters in respect of which approval is withheld and, if those matters are capable of remedy, what the purchaser reasonably requires to be done to remedy those matters. If the purchaser does not give a purchaser's notice the purchaser shall be deemed to have approved the LIM. If through no fault of the purchaser, the LIM is not available on or before the fifteenth working day after the date of this agreement and the vendor does not give an extension when requested, this condition shall not have been fulfilled and the provisions of clause 9.10(5) shall apply.

(3) The vendor shall give notice to the purchaser ("the vendor's notice") on or before the fifth working day after receipt of the purchaser's notice advising whether or not the vendor is able and willing to comply with the purchaser's notice by the settlement date.

(4) If the vendor does not give a vendor's notice, or if the vendor's notice advises that the vendor is unable or unwilling to comply with the purchaser's notice, and if the purchaser does not, on or before the tenth working day after the date on which the purchaser's notice is given, give notice to the vendor that the purchaser waives the objection to the LIM, this condition shall not have been fulfilled and the provisions of clause 9.10(5) shall apply.

© ADLS & REINZ. All Rights Reserved.

RP

SDC - Approved Building Consent Document - BC230326-Amendment 1 - Pg 42 of 61 - 29/09/2023 - steven.burnham

(5) If the vendor gives a vendor's notice advising that the vendor is able and willing to comply with the purchaser's notice, this condition is deemed to have been fulfilled, and it shall be a requirement of settlement that the purchaser's notice shall be complied with, and also, if the vendor must carry out work on the property, that the vendor shall obtain the approval of the territorial authority to the work done, both before settlement.

9.4 Building report condition

(1) If the purchaser has indicated on the front page of this agreement that a building report is required, this agreement is conditional upon the purchaser obtaining at the purchaser's cost on or before the fifteenth working day after the date of this agreement a report on the condition of the buildings and any other improvements on the property that is satisfactory to the purchaser, on the basis of an objective assessment.

(2) The report must be prepared in good faith by a suitably-qualified building inspector in accordance with accepted principles and methods and it must be in writing.

(3) Subject to the rights of any tenants of the property, the vendor shall allow the building inspector to inspect the property at all reasonable times upon reasonable notice for the purposes of preparation of the report.

(4) The building inspector may not carry out any invasive testing in the course of inspection without the vendor's prior written consent.

(5) If the purchaser avoids this agreement for non-fulfilment of this condition pursuant to clause 9.10(5), the purchaser must provide the vendor immediately upon request with a copy of the building inspector's report.

9.5 Toxicology report condition

(1) If the purchaser has indicated on the front page of this agreement that a toxicology report is required, this agreement is conditional upon the purchaser obtaining at the purchaser's cost on or before the fifteenth working day after the date of this agreement, a toxicology report on the property that is satisfactory to the purchaser, on the basis of an objective assessment.

(2) The purpose of the toxicology report shall be to detect whether the property has been contaminated by the preparation, manufacture or use of drugs including, but not limited to, methamphetamine.

(3) The report must be prepared in good faith by a suitably-qualified inspector using accepted principles and methods and it must be in writing.

(4) Subject to the rights of any tenants of the property, the vendor shall allow the inspector to inspect the property at all reasonable times upon reasonable notice for the purposes of carrying out the testing and preparation of the report.

(5) The inspector may not carry out any invasive testing in the course of the inspection without the vendor's prior written consent.

(6) If the purchaser avoids this agreement for non-fulfilment of this condition pursuant to clause 9.10(5), the purchaser must provide the vendor immediately upon request with a copy of the inspector's report.

9.6 OIA consent condition

(1) If the purchaser has indicated on the front page of this agreement that OIA consent is required, this agreement is conditional upon OIA consent being obtained on or before the OIA date shown on the front page of this agreement on terms and conditions that are satisfactory to the purchaser, acting reasonably, the purchaser being responsible for payment of the application fee.

(2) If the purchaser has indicated on the front page of this agreement that OIA consent is not required, or has failed to indicate whether it is required, then the purchaser warrants that the purchaser does not require OIA consent.

9.7 If this agreement relates to a transaction to which the Land Act 1948 applies, this agreement is conditional upon the vendor obtaining the necessary consent by the Land Act date shown on the front page of this agreement.

9.8 If the Land Act date or OIA date is not shown on the front page of this agreement that date shall be the settlement date or that date 65 working days after the date of this agreement whichever is the sooner, except where the property comprises residential (but not otherwise sensitive) land in which case that date shall be the settlement date or that date 20 working days after the date of this agreement, whichever is the sooner.

9.9 Resource Management Act condition

(1) If this agreement relates to a transaction to which section 225 of the Resource Management Act 1991 applies then this agreement is subject to the appropriate condition(s) imposed by that section.

9.10 Operation of conditions

If this agreement is expressed to be subject either to the above or to any other condition(s), then in relation to each such condition the following shall apply unless otherwise expressly provided:

(1) The condition shall be a condition subsequent.

(2) The party or parties for whose benefit the condition has been included shall do all things which may reasonably be necessary to enable the condition to be fulfilled by the date for fulfilment.

(3) Time for fulfilment of any condition and any extended time for fulfilment to a fixed date shall be of the essence.

(4) The condition shall be deemed to be not fulfilled until notice of fulfilment has been served by one party on the other party.

(5) If the condition is not fulfilled by the date for fulfilment, either party may at any time before the condition is fulfilled or waived avoid this agreement by giving notice to the other. Upon avoidance of this agreement, the purchaser shall be entitled to the immediate return of the deposit and any other moneys paid by the purchaser under this agreement and neither party shall have any right or claim against the other arising from this agreement or its termination.

(6) At any time before this agreement is avoided, the purchaser may waive any finance condition and either party may waive any other condition which is for the sole benefit of that party. Any waiver shall be by notice.

10.0 Claims for compensation

10.1 If the purchaser has not purported to cancel this agreement, the breach by the vendor of any term of this agreement does not defer the purchaser's obligation to settle, but that obligation is subject to the provisions of this clause 10.0.

© ADLS & REINZ. All Rights Reserved.

RP

SDC - Approved Building Consent Document - BC230326-Amendment 1 - Pg 43 of 61 - 29/09/2023 - steven.burnham

10.2 The provisions of this clause apply if:

(1) the purchaser (acting reasonably) claims a right to compensation for:

(a) a breach of any term of this agreement;

(b) a misrepresentation;

(c) a breach of section 9 or section 14 of the Fair Trading Act 1986;

(d) an equitable set-off, or

(2) there is a dispute between the parties regarding any amounts payable:

(a) under clause 3.12 or clause 3.13; or

(b) under clause 5.2.

10.3 To make a claim under this clause 10.0:

(1) the claimant must serve notice of the claim on the other party on or before the last working day prior to the settlement date, time being of the essence (except for claims made after the settlement date for amounts payable under clause 3.12 or clause 3.13, in respect of which the claimant may serve notice of the claim on the other party at any time after a dispute arises over those amounts); and

(2) the notice must:

(a) state the particular breach of the terms of this agreement, or the claim under clause 3.12, clause 3.13 or clause 5.2, or for misrepresentation, or for breach of section 9 or section 14 of the Fair Trading Act 1986, or for an equitable set-off; and

(b) state a genuine pre-estimate of the loss suffered by the claimant; and

(c) be particularised and quantified to the extent reasonably possible as at the date of the notice; and

(3) the claimant must not have made a prior claim under this clause 10.0 (to the intent that a claimant may make a claim under this clause 10.0 on only one occasion, though such claim may address one or more of the elements in clause 10.2).

10.4 If the claimant is unable to give notice under clause 10.3 in respect of claims under clause 10.2(1) or clause 10.2(2)(b) by the settlement date by reason of the conduct or omission of the other party, the notice may be served on or before the working day immediately preceding the last working day on which settlement must take place under a settlement notice served by either party under clause 11.1, time being of the essence.

10.5 If the amount of compensation is agreed, it shall be deducted from or added to the amount to be paid by the purchaser on settlement.

10.6 If the purchaser makes a claim for compensation under clause 10.2(1) but the vendor disputes that the purchaser has a valid or reasonably arguable claim, then:

(1) the vendor must give notice to the purchaser within three working days after service of the purchaser's notice under clause 10.3, time being of the essence; and

(2) the purchaser's right to make the claim (on the basis that such claim is valid or reasonably arguable) shall be determined by an experienced property lawyer or an experienced litigator appointed by the parties. If the parties cannot agree on the appointee, the appointment shall be made on the application of either party by the president for the time being of the Auckland District Law Society. The appointee's costs shall be met by the party against whom the determination is made or otherwise as determined by the appointee.

10.7 If the purchaser makes a claim for compensation under clause 10.2(1) and the vendor fails to give notice to the purchaser pursuant to clause 10.6, the vendor is deemed to have accepted that the purchaser has a valid or reasonably arguable claim.

10.8 If it is accepted, or determined under clause 10.6, that the purchaser has a right to claim compensation under clause 10.2(1) but the amount of compensation claimed is disputed, or if the claim is made under clause 10.2(2) and the amount of compensation claimed is disputed, then:

(1) an interim amount shall be paid on settlement by the party required to a stakeholder until the amount of the claim is determined;

(2) if the parties cannot agree on a stakeholder, the interim amount shall be paid to a stakeholder nominated on the application of either party by the president for the time being of the Auckland District Law Society;

(3) the interim amount must be a reasonable sum having regard to the circumstances, except that:

(a) where the claim is under clause 3.13 the interim amount shall be the lower of the amount claimed, or an amount equivalent to interest at the interest rate for late settlement for the relevant default period on such portion of the purchase price (including any deposit) as is payable under this agreement on or by the settlement date;

(b) neither party shall be entitled or required to undertake any discovery process, except to the extent this is deemed necessary by the appointee under clause 10.8(4) for the purposes of determining that the requirements of clauses 10.3(2)(b)-(c) have been met.

(4) if the parties cannot agree on the interim amount, the interim amount shall be determined by an experienced property lawyer, an experienced litigator, or, where the claim for compensation is made under clause 5.2, an experienced registered valuer or quantity surveyor appointed by the parties. The appointee's costs shall be met equally by the parties, or otherwise as determined by the appointee. If the parties cannot agree on the appointee, the appointment shall be made on the application of either party by the president for the time being of the Auckland District Law Society;

(5) the amount of the claim determined to be payable shall not be limited by the interim amount;

(6) the stakeholder shall lodge the interim amount on an interest-bearing call deposit with a bank registered under the Reserve Bank of New Zealand Act 1989 in the joint names of the vendor and the purchaser;

(7) the interest earned on the interim amount net of any withholding tax and any bank or legal administration fees and commission charges shall follow the destination of the interim amount; and

(8) apart from the net interest earned on the interim amount, no interest shall be payable by either party to the other in respect of the claim for compensation once the amount of the claim has been determined, provided that if the amount determined is in excess of the interim amount, the party liable to make payment of that excess shall pay interest to the other party at the interest rate for late settlement on the amount of that excess if it is not paid on or before the third working day after the date of notification of the determination, computed from the date of such notification until payment.

© ADLS & REINZ. All Rights Reserved.

RP MP

SDC - Approved Building Consent Document - BC230326-Amendment 1 - Pg 44 of 61 - 29/09/2023 - steven.burnham

10.9 Where a determination has to be made under clause 10.6(2) or clause 10.8(4) and the settlement date will have passed before the determination is made, the settlement date shall be deferred to the second working day following the date of notification to both parties of the determination. Where a determination has to be made under both of these clauses, the settlement date shall be deferred to the second working day following the date on which notification to both parties has been made of both determinations. However, the settlement date will only be deferred under this clause 10.9 if, prior to such deferral, the purchaser's lawyer provides written confirmation to the vendor's lawyer that but for the resolution of the claim for compensation, the purchaser is ready, willing and able to complete settlement.

10.10 The procedures prescribed in clauses 10.1 to 10.9 shall not prevent either party from taking proceedings for specific performance of this agreement.

10.11 A determination under clause 10.6 that the purchaser does not have a valid or reasonably arguable claim for compensation under clause 10.2(1) shall not prevent the purchaser from pursuing that claim following settlement.

10.12 Where a determination is made by a person appointed under either clause 10.6 or clause 10.8, that person:

(1) shall not be liable to either party for any costs or losses that either party may claim to have suffered in respect of the determination; and

(2) may make an order that one party must meet the reasonable legal costs of the other party.

11.0 Notice to complete and remedies on default

11.1 (1) If the sale is not settled on the settlement date, either party may at any time thereafter serve on the other party a settlement notice.

(2) The settlement notice shall be effective only if the party serving it is at the time of service in all material respects ready, able, and willing to proceed to settle in accordance with this agreement, or is not so ready, willing, and able to settle only by reason of the default or omission of the other party.

(3) If the purchaser is in possession, the vendor's right to cancel this agreement will be subject to sections 28 to 36 of the Property Law Act 2007 and the settlement notice may incorporate or be given with a notice under section 28 of that Act complying with section 29 of that Act.

11.2 Subject to clause 11.1(3), upon service of the settlement notice the party on whom the notice is served shall settle:

(1) on or before the twelfth working day after the date of service of the notice; or

(2) on the first working day after the 13th day of January if the period of twelve working days expires during the period commencing on the 6th day of January and ending on the 13th day of January, both days inclusive,

time being of the essence, but without prejudice to any intermediate right of cancellation by either party.

11.3 (1) If this agreement provides for the payment of the purchase price by instalments and the purchaser fails duly and punctually to pay any instalment on or within one month from the date on which it fell due for payment then, whether or not the purchaser is in possession, the vendor may immediately give notice to the purchaser calling up the unpaid balance of the purchase price, which shall upon service of the notice fall immediately due and payable.

(2) The date of service of the notice under this clause shall be deemed the settlement date for the purposes of clause 11.1.

(3) The vendor may give a settlement notice with a notice under this clause.

(4) For the purposes of this clause a deposit is not an instalment.

11.4 If the purchaser does not comply with the terms of the settlement notice served by the vendor then, subject to clause 11.1(3):

(1) Without prejudice to any other rights or remedies available to the vendor at law or in equity, the vendor may:

(a) sue the purchaser for specific performance; or

(b) cancel this agreement by notice and pursue either or both of the following remedies, namely:

(i) forfeit and retain for the vendor's own benefit the deposit paid by the purchaser, but not exceeding in all 10% of the purchase price; and/or

(ii) sue the purchaser for damages.

(2) Where the vendor is entitled to cancel this agreement, the entry by the vendor into a conditional or unconditional agreement for the resale of the property or any part thereof shall take effect as a cancellation of this agreement by the vendor if this agreement has not previously been cancelled and such resale shall be deemed to have occurred after cancellation.

(3) The damages claimable by the vendor under clause 11.4(1)(b)(ii) shall include all damages claimable at common law or in equity and shall also include (but shall not be limited to) any loss incurred by the vendor on any bona fide resale contracted within one year from the date by which the purchaser should have settled in compliance with the settlement notice. The amount of that loss may include:

(a) interest on the unpaid portion of the purchase price at the interest rate for late settlement from the settlement date to the settlement of such resale;

(b) all costs and expenses reasonably incurred in any resale or attempted resale; and

(c) all outgoings (other than interest) on or maintenance expenses in respect of the property from the settlement date to the settlement of such resale.

(4) Any surplus money arising from a resale shall be retained by the vendor.

11.5 If the vendor does not comply with the terms of a settlement notice served by the purchaser, then, without prejudice to any other rights or remedies available to the purchaser at law or in equity the purchaser may:

(1) sue the vendor for specific performance; or

(2) cancel this agreement by notice and require the vendor forthwith to repay to the purchaser any deposit and any other money paid on account of the purchase price and interest on such sum(s) at the interest rate for late settlement from the date or dates of payment by the purchaser until repayment.

11.6 The party serving a settlement notice may extend the term of the notice for one or more specifically stated periods of time and thereupon the term of the settlement notice shall be deemed to expire on the last day of the extended period or periods and it shall operate as though this clause stipulated the extended period(s) of notice in lieu of the period otherwise applicable; and time shall be of the essence accordingly. An extension may be given either before or after the expiry of the period of the notice.

© ADLS & REINZ. All Rights Reserved.

RP MP

SDC - Approved Building Consent Document - BC230326-Amendment 1 - Pg 45 of 61 - 29/09/2023 - steven.burnham

11.7 Nothing in this clause shall preclude a party from suing for specific performance without serving a settlement notice.

11.8 A party who serves a settlement notice under this clause shall not be in breach of an essential term by reason only of that party's failure to be ready and able to settle upon the expiry of that notice.

12.0 Non-merger

12.1 The obligations and warranties of the parties in this agreement shall not merge with:

(1) the giving and taking of possession;
(2) settlement;
(3) the transfer of title to the property;
(4) delivery of the chattels (if any); or
(5) registration of the transfer of title to the property.

13.0 Goods and Services Tax and Purchase Price Allocation

13.1 If this agreement provides for the purchaser to pay (in addition to the purchase price stated without GST) any GST which is payable in respect of the supply made under this agreement, then:

(1) the purchaser shall pay to the vendor the GST which is so payable in one sum on the GST date;
(2) where the GST date has not been inserted on the front page of this agreement the GST date shall be the settlement date;
(3) where any GST is not so paid to the vendor, the purchaser shall pay to the vendor:
  (a) interest at the interest rate for late settlement on the amount of GST unpaid from the GST date until payment; and
  (b) any default GST;
(4) it shall not be a defence to a claim against the purchaser for payment to the vendor of any default GST that the vendor has failed to mitigate the vendor's damages by paying an amount of GST when it fell due under the GST Act; and
(5) any sum referred to in this clause is included in the moneys payable by the purchaser on settlement pursuant to clause 3.8(1).

13.2 If the supply under this agreement is a taxable supply, the vendor will deliver a tax invoice to the purchaser on or before the GST date or such earlier date as the purchaser is entitled to delivery of an invoice under the GST Act.

13.3 (1) Without prejudice to the vendor's rights and remedies under clause 13.1, where any GST is not paid to the vendor on or within one month of the GST date, then whether or not the purchaser is in possession, the vendor may immediately give notice to the purchaser calling up any unpaid balance of the purchase price, which shall upon service of the notice fall immediately due and payable.

(2) The date of service of the notice under this clause shall be deemed the settlement date for the purposes of clause 11.1.
(3) The vendor may give a settlement notice under clause 11.1 with a notice under this clause.

13.4 Each party warrants that their response to the statement on the front page regarding purchase price allocation being relevant to the vendor or purchaser/purchaser's nominee for income tax and/or GST purposes is correct.

14.0 Zero-rating

14.1 The vendor warrants that the statement on the front page regarding the vendor's GST registration status in respect of the supply under this agreement and any particulars stated by the vendor in Schedule 1 are correct at the date of this agreement and will remain correct at settlement.

14.2 The purchaser warrants that any particulars stated by the purchaser in Schedule 1 are correct at the date of this agreement.

14.3 Where the particulars stated on the front page and in Schedule 1 indicate that:

(1) the vendor is and/or will be at settlement a registered person in respect of the supply under this agreement;
(2) the recipient is and/or will be at settlement a registered person;
(3) the recipient intends at settlement to use the property for making taxable supplies; and
(4) the recipient does not intend at settlement to use the property as a principal place of residence by the recipient or a person associated with the recipient under section 2A(1)(c) of the GST Act,

GST will be chargeable on the supply under this agreement at 0% pursuant to section 11(1)(mb) of the GST Act.

14.4 If GST is chargeable on the supply under this agreement at 0% pursuant to section 11(1)(mb) of the GST Act, then on or before settlement the purchaser will provide the vendor with the recipient's name, address, and registration number if any of those details are not included in Schedule 1 or they have altered.

14.5 (1) If any of the particulars stated by the purchaser in Schedule 1:
  (a) are incomplete; or
  (b) alter between the date of this agreement and settlement,

  the purchaser shall notify the vendor of the particulars which have not been completed and the altered particulars as soon as practicable before settlement.

(2) The purchaser warrants that any added or altered particulars will be correct as at the date of the purchaser's notification.
(3) If the GST treatment of the supply under this agreement should be altered as a result of the added or altered particulars, the vendor shall prepare and deliver to the purchaser or the purchaser's lawyer an amended settlement statement, if the vendor has already tendered a settlement statement, and a credit note or a debit note, as the case may be, if the vendor has already issued a tax invoice.

14.6 If

(1) the particulars in Schedule 1 state that part of the property is being used as a principal place of residence at the date of this agreement; and
(2) that part is still being so used at the time of the supply under this agreement,

then, the supply of that part will be a separate supply in accordance with section 5(15)(a) of the GST Act.

© ADLS & REINZ. All Rights Reserved.

RP MP

SDC - Approved Building Consent Document - BC230326-Amendment 1 - Pg 46 of 61 - 29/09/2023 - steven.burnham

14.7 If

(1) the particulars stated in Schedule 1 indicate that the recipient intends to use part of the property as a principal place of residence by the recipient or a person associated with the recipient under section 2A(1)(c) of the GST Act; and

(2) that part is the same part as that being used as a principal place of residence at the time of the supply under this agreement,

then the references in clauses 14.3 and 14.4 to "the property" shall be deemed to mean the remainder of the property excluding that part and the references to "the supply under this agreement" shall be deemed to mean the supply under this agreement of that remainder.

14.8 If the particulars stated on the front page and in Schedule 1 indicate in terms of clause 14.3 that GST will be chargeable on the supply under this agreement at 0% pursuant to section 11(1)(mb) of the GST Act, but any of the particulars stated by the purchaser in Schedule 1 should alter between the date of this agreement and settlement, such that GST no longer becomes chargeable on the supply at 0%, then:

(1) the purchase price shall be plus GST (if any), even if it has been expressed as being inclusive of GST (if any) on the front page of this agreement; and

(2) if the vendor has already had to account to the Inland Revenue Department for the GST which is payable in respect of the supply under this agreement and did so on the basis that in accordance with clause 14.3 the GST would be chargeable at 0%, the purchaser shall pay GST and any default GST to the vendor immediately upon demand served on the purchaser by the vendor (and where any GST or default GST is not so paid to the vendor, the purchaser shall pay to the vendor interest at the interest rate for late settlement on the amount unpaid from the date of service of the vendor's demand until payment).

15.0 Supply of a Going Concern

15.1 If there is a supply under this agreement to which section 11(1)(mb) of the GST Act does not apply but which comprises the supply of a taxable activity that is a going concern at the time of the supply, then, unless otherwise expressly stated in this agreement:

(1) each party warrants that it is a registered person or will be so by the date of the supply;

(2) each party agrees to provide the other party by the date of the supply with proof of its registration for GST purposes;

(3) the parties agree that they intend that the supply is of a taxable activity that is capable of being carried on as a going concern by the purchaser; and

(4) the parties agree that the supply made pursuant to this agreement is the supply of a going concern on which GST is chargeable at 0%.

15.2 If it subsequently transpires that GST is payable in respect of the supply and if this agreement provides for the purchaser to pay (in addition to the purchase price without GST) any GST which is payable in respect of the supply made under this agreement, then the provisions of clause 13.0 of this agreement shall apply.

16.0 Limitation of Liability

16.1 If a person enters into this agreement as trustee of a trust and is not a beneficiary of the trust, then that person will be known as an "independent trustee" and clauses 16.2 and 16.3 will apply.

16.2 The liability of an independent trustee under this agreement is limited to the extent of the indemnity from the assets of the trust available to the independent trustee at the time of enforcement of that indemnity.

16.3 However, if the entitlement of the independent trustee to be indemnified from the trust assets has been lost or impaired (whether fully or in part) by reason of the independent trustee's act or omission (whether in breach of trust or otherwise), then the limitation of liability in clause 16.2 does not apply, and the independent trustee will be personally liable up to the amount that would have been indemnified from the assets of the trust had the indemnity not been lost.

17.0 Counterparts

17.1 This agreement may be executed and delivered in any number of counterparts (including scanned and emailed PDF counterparts).

17.2 Each executed counterpart will be deemed an original and all executed counterparts together will constitute one (and the same) instrument.

17.3 This agreement shall not come into effect until each person required to sign has signed at least one counterpart and both vendor and purchaser have received a counterpart signed by each person required to sign.

17.4 If the parties cannot agree on the date of this agreement, and counterparts are signed on separate dates, the date of the agreement is the date on which the last counterpart was signed and delivered to all parties.

18.0 Agency

18.1 If the name of a licensed real estate agent is recorded on this agreement, it is acknowledged that the sale evidenced by this agreement has been made through that agent whom the vendor has appointed as the vendor's agent according to an executed agency agreement.

18.2 The scope of the authority of the agent under clause 18.1 does not extend to making an offer, counteroffer, or acceptance of a purchaser's offer or counteroffer on the vendor's behalf without the express authority of the vendor for that purpose. That authority, if given, should be recorded in the executed agency agreement.

18.3 The vendor shall be liable to pay the agent's charges including GST in accordance with the executed agency agreement.

19.0 Collection of Sales Information

19.1 Once this agreement has become unconditional in all respects, the agent may provide certain information relating to the sale to the Real Estate Institute of New Zealand Incorporated (REINZ).

19.2 This information will be stored on a secure password protected network under REINZ's control and may include (amongst other things) the sale price and the address of the property, but will not include the parties' names or other personal information under the Privacy Act 2020.

19.3 This information is collected, used and published for statistical, property appraisal and market analysis purposes, by REINZ, REINZ member agents and others.

© ADLS & REINZ. All Rights Reserved.

RP

SDC - Approved Building Consent Document - BC230326-Amendment 1 - Pg 47 of 61 - 29/09/2023 - steven.burnham

19.4 Despite the above, if REINZ does come to hold any of the vendor's or purchaser's personal information, that party has a right to access and correct that personal information by contacting REINZ at info@reinz.co.nz or by post or telephone.

20.0 COVID-19 / Pandemic Provisions

20.1 The parties acknowledge that the Government of New Zealand or a Minister of that Government may, as a result of public health risks arising from a Pandemic, order restrictions on personal movement pursuant to the COVID-19 Public Health Response Act 2020 (or other legislation), and the effect of such restrictions may be that personal movement within or between particular regions is unlawful for the general population of those regions.

20.2 Where such a legal restriction on personal movement exists either nationally or in the region or district where the property is located:

(1) The date for satisfaction of any condition that has not yet been satisfied or waived will be the later of:

(a) the date that is 10 working days after the restriction on personal movement in the region or district in which the property is located is removed; or

(b) the date for satisfaction of the condition as stated elsewhere in this agreement.

(2) The settlement date will be the later of:

(a) the date that is 10 working days after all conditions are satisfied or waived; or

(b) the date that is 10 working days after the date on which the restriction on personal movement in the region or district in which the property is located is removed; or

(c) the settlement date as stated elsewhere in this agreement.

(3) *Nothing in the previous provisions* of this clause is to have the effect of bringing forward a date specified in this agreement.

20.3 Clause 20.2 applies whether such legal restriction on personal movement exists at, or is imposed after, the date of this agreement, and on each occasion such restriction is imposed.

20.4 *Neither party will have any claim against* the other for a deferral of a condition date or the settlement date under this clause 20.0.

20.5 For the purposes of this clause 20.0, "Pandemic" means the COVID-19 pandemic, or such other pandemic or epidemic that gives rise to Government orders restricting personal movement.

Copyright February 2022

RP

SDC - Approved Building Consent Document - BC230326-Amendment 1 - Pg 48 of 61 - 29/09/2023 - steven.burnham

Further Terms of Sale

21.0 Due Diligence

1. This agreement is conditional until the **25th August 2023** following the execution by both parties, upon the Purchaser being entirely satisfied with the property as a suitable investment at the agreed purchase price following the carrying out a due diligence investigation of the property, including (but not limited to) an investigation of the following:
   a. The state of the title to the land;
   b. The overall financial suitability of the purchasers proposed investment in the property;
   c. The overall financial stability and commercial viability of the proposed ownership structure.
2. The parties acknowledge that this condition is inserted for the sole benefit of the Purchaser and may at any time prior to this agreement being avoided be waived by the Purchaser giving written notice of waiver to the Vendor.

22.0 Building Agreement

1. The purchaser agrees to enter into a building agreement with TKR Homes Limited for the construction of a dwelling on the property ("Building Agreement") and this agreement is subject to the Building Agreement becoming unconditional by **25th August 2023.**
2. This agreement and the Building Agreement are collateral and contingent and a breach of this agreement shall constitute a breach of the Building Agreement and vice versa.

23.0 Subdivision Terms and Conditions

1. The Purchaser acknowledges that there are land covenants to be registered in relation (as attached) and the Purchaser agrees that it will be bound by such land covenants.

24.0 Consent Matters

1. The Purchaser agrees not to directly or indirectly in any matter oppose, object to or appeal any applications for resource consents, rezoning applications, or other consents or approvals (including appeals) or amendments to such applications by the Land Developer in relation to land in the Subdivision but will support, give consent to and sign any consents or other forms required by the Land Developer.

25.0 Deposit

1. The Deposit shall be paid to the Vendors Solicitors Trust Account on satisfaction of Further Terms of clause 21 and 22. The Vendors Solicitor shall hold it as stakeholder until settlement.

26.0 Settlement

1. 10 working days after confirmation of this Agreement.

27.0 Bond

1. On Settlement the Purchaser shall pay to the Vendor $2,500 to reimburse the Vendor for the completion and damage remediation bond which the vendor will have to pay to the Developer at settlement.

RP

SDC - Approved Building Consent Document - BC230326-Amendment 1 - Pg 49 of 61 - 29/09/2023 - steven.burnham

Restrictive Covenants

ACLAND PARK SUBDIVISION

652323.1 - 2509656

RP

SDC - Approved Building Consent Document - BC230326-Amendment 1 - Pg 50 of 61 - 29/09/2023 - steven.burnham

Table of Contents

1. INTERPRETATION 3
2. LIST OF RESTRICTIVE COVENANTS 3
   - 2.1 Subdivision 3
   - 2.2 Temporary Accommodation 3
   - 2.3 Use Prior to Completion 3
   - 2.4 Storage of Vehicles 3
   - 2.5 Noxious Weeds and Rubbish 3
   - 2.6 Animals 4
   - 2.7 Signs 4
   - 2.8 New Materials 4
   - 2.9 Non-permitted Cladding Materials 4
   - 2.10 Painting 4
   - 2.11 Building Materials 4
   - 2.12 Fencing Materials 4
   - 2.13 Boundary Fencing 4
   - 2.14 Letterbox 6
   - 2.15 Completion of Landscaping, Driveways and Paths 6
   - 2.16 Satellite Dishes 6
   - 2.17 Garden Ornamentation 6
   - 2.18 Developer to Approve Plans 6
   - 2.19 Construction Fencing 7
   - 2.20 Construction Zone Areas 7
   - 2.21 Health and Safety Requirements 7
   - 2.22 Delivery of Materials 7
   - 2.23 Building Rubbish 7
   - 2.24 Washing of Vehicles 7
   - 2.25 Portable Toilet Facility 7
3. TREATMENT OF EXCAVATED MATERIAL 7
4. DISPUTE RESOLUTION 7
5. DEFAULT PROVISIONS 7
6. GENERAL 8

SDC - Approved Building Consent Document - BC230326-Amendment 1 - Pg 51 of 61 - 29/09/2023 - steven.burnham

RESTRICTIVE COVENANTS – ACLAND PARK

1. INTERPRETATION

For the purposes of this Land Covenant:

"**Design Guidelines**" means the Developer's architectural and landscaping guidelines provided to Lot owners as it may be amended by the Developer in writing from time to time.

"**Developer**" means Long Vision Property Development Limited.

"**Development Lots**" means Lots [ ] comprised in DP [ ] and "**Development Lot**" means any one of them.

"**Dwelling**" means any dwelling, building or other structure situated on a Lot.

"**Grantee**" means the Developer and the registered proprietor of any Lot.

"**Grantor**" means the registered proprietor of any Lot.

"**Lots**" means lots [ ] comprised in DP [ ] and "**Lot**" means any one of them.

2. THE GRANTOR AND THEIR SUCCESSORS IN TITLE SHALL:

2.1 Subdivision

Not further subdivide any Lots, with the exception of the Development Lots, whether by way of cross-lease, unit title, subdivision into separate lots or in any other way PROVIDED HOWEVER that this restriction will not apply to a subdivision which has the effect only of adjusting the boundaries between two adjoining Lots.

2.2 Temporary Accommodation

Not use the Lot as a residence either by the erection of temporary structures or the placing thereon of caravans or other vehicles used for human habitation.

2.3 Use Prior To Completion

Not use the Lot as a residence before a Code Compliance Certificate has been issued by the Selwyn District Council unless section 362V(2) of the Building Act 2004 applies.

2.4 Storage of Vehicles

Not allow any vehicles (including boats, trailers, caravans and motor homes, but excluding a motor vehicle that is used on a regular basis) to be stored on any part of the Lot between the Dwelling and the road frontage, nor allow any such vehicle to be visible above the fence line when viewed from any neighbouring Lot.

2.5 Noxious Weeds and Rubbish

Not allow the accumulation of any rubbish or noxious substances which may be likely to cause nuisance or annoyance to the neighbouring occupiers, or permit grass or weeds to grow to such a height as to become unsightly.

SDC - Approved Building Consent Document - BC230326-Amendment 1 - Pg 52 of 61 - 29/09/2023 - steven.burnham

2.6 Animals

Not permit any dog or other pet to be kept in or about the Lot which dog or other pet is likely to cause a nuisance or annoyance to other neighbouring occupiers or detract from the subdivision, and in particular, without otherwise limiting this restriction, not to keep on or about the Lot any dog which in whole or part appears to be a Pit Bull Terrier, Rottweiller, Japanese Akita, Japanese Tosa, Dogo Argentino or Brazilian Fila.

2.7 Signs

Not permit any advertisement, sign or hoarding of a commercial nature (excluding a professionally made "For Sale" sign not exceeding 2 square metres in size and any compulsory statutory signage or builder's signage) to be erected on any part of the Lot or Dwelling. The Developer shall, at its discretion, be entitled to exempt one or more Lots of its choice, including those which relate to any signage associated with a "show home", Development Lot (including any commercial Development Lots) and/or the Developer's sales office, for such period as determined by the Developer.

2.8 New Materials

Not erect or permit to be erected on the Lot any Dwelling using anything other than new materials PROVIDED THAT second-hand bricks may be allowed for exterior cladding at the Developer's discretion. No pre-lived in or pre-built Dwelling shall be transported on to the Lot.

2.9 Non-permitted Cladding Materials

Not construct any Dwelling on the Lot with an external cladding of unrelieved flat sheet fibrolite, hardiflex, galvanised steel or similar materials PROVIDED THAT this restriction shall not apply to the cladding of soffits or gable ends.

2.10 Painting

Not leave the outside of any Dwelling unfinished, or any exterior walls or doors unpainted or unstained PROVIDED THAT this clause shall not apply where natural timber cladding or decorative brick, stone or concrete are used.

2.11 Building Materials

Not use as a roofing material any material other than tiles (clay, ceramic, concrete, decramastic, pre-coated pressed steel) of a single colour or pre-painted long-run pressed steel, nor exterior cladding of material other than clay brick, weather-board, concrete block, masonry, stucco, solid plaster or glazing or a combination of the above. Preferred building materials are detailed in the Design Guidelines.

2.12 Fencing Materials

Not erect or permit to be erected on the Lot any fence or boundary wall of any material containing cement board sheets or panels, corrugated iron, or metal sheeting.

2.13 Boundary Fencing

(a) **Compliance with District Plan and Fencing Covenants**

The Grantor must at all times ensure they comply with the rules in the Selwyn District Plan as well as the provisions contained in this clause 2.13 as it relates

SDC - Approved Building Consent Document - BC230326-Amendment 1 - Pg 53 of 61 - 29/09/2023 - steven.burnham

to fencing of the Lot. The Grantee does not warrant that any fence complying with these covenants will also comply with the District Plan and as such it is the Grantor's responsibility to ensure they are at all times compliant with the District Plan. For the avoidance of doubt even if the Grantor applies for and receives a resource consent from the Selwyn District Council in relation to fencing of the Lot, they must still also comply with the provisions contained in this clause 2.13.

b) **Interpretation**

For the purpose of clause 2.13 the following words and phrases mean:

"Double Frontage Lots" means a lot with two Road Boundaries.

"Maximum Length" means 40% of the length of the Road Boundary.

"Residential Lots" means all lots on DP [ ] excluding any Lot shown as Kiosk Site, Road, Reserve or jointly owned access lot.

"Road Boundary" means a boundary between a Lot and any legal road and "Road Boundaries" means where this is more than one of them.

"Side Boundary" means a boundary between a Lot and an adjoining Lot that is not a Road Boundary and "**Side Boundaries**" means more than one of them.

"Total Length" means the total length of the fence taken in a line parallel to the road.

c) **Road Boundary Fencing (excluding the Development Lots)**

The Grantor shall not permit any fence or other structure (other than a letterbox or a fence of the type referred to in clause 2.13(d)) to be erected in the area between the Road Boundary and a line drawn parallel to the Road Boundary in line with that part of the Dwelling closest to the Road Boundary.

d) **Permitted Road Boundary Fences (excluding the Development Lots)**

For the purpose of clause 2.13(c) the Grantor shall be permitted to erect one fence (or on Double Frontage Lots, up to two fences) between the Dwelling and the Road Boundary provided that the fence or fences are erected at least 2 metres from the Road Boundary and they comply with the following requirements:

i) The fence or fences are constructed using primarily the same materials as the external walls of the Dwelling; and

ii) The fence or fences are no higher than 1.0 metres PROVIDED THAT on Double Frontage Lots the fence or fences may be up to 1.8 metres high for up to half of the Maximum Length.

e) **Side Boundary Fences**

Not permit any fence to be erected on the common Side Boundaries between any two Residential Lots on DP [ ] within 2 metres of the point where the Side Boundary meets the Road Boundary.

f) **Road Boundary Fencing of the Development Lots**

The Grantor of any Development Lots shall not permit any fence or other structure to be erected on the boundary between any of the Development Lots

SDC - Approved Building Consent Document - BC230326-Amendment 1 - Pg 54 of 61 - 29/09/2023 - steven.burnham

(or any lot subsequently issued by subdivision) and a Road Boundary other than a fence approved by the Developer under clause 2.18, and complying with a resource consent granted for the comprehensive development of any of the Development Lots, nor shall the Grantor remove or modify any such approved fence (or other structure).

g) **Reserve Boundary Fencing**

Where the Developer has, as part of the development of the Lot, installed a fence on a Reserve Boundary, the Covenantor shall not remove or modify such fence.

2.14 Letterbox

Not erect a Dwelling without contemporaneously erecting a new letterbox of a design, colour and cladding consistent with the Dwelling, or as approved by the Developer in accordance with clause 2.18.

2.15 Completion of Landscaping, Driveways and Paths

Not permit the Dwelling to be occupied unless all driveways and paths are completed in permanent materials, all wooden boundary fences are stained and all unpaved areas are properly grassed or landscaped.

2.16 Satellite Dishes

Not place or allow to be placed on the Lot or Dwelling any aerials or satellite dishes unless the same comply with the following requirements:

a) Have a maximum diameter of one metre; and

b) Are situated at least four metres from the front façade of the Dwelling; and

c) Are mounted below the ridgeline of the roof of the Dwelling.

2.17 Garden Ornamentation

Not place or allow to be placed on the Lot or Dwelling any brightly painted ornaments which are reasonably visible by any person standing on the footpath of any legal road.

2.18 Developer to Approve Plans

Not submit its building consent to the local authority and commence any work on the Lot:

a) Without submitting to the Developer and receiving its approval for all building plans, including site plans (showing the position of the vehicle crossing) specifications, fencing and landscaping plans (which shall be prepared by a qualified landscape designer and builder). Sole discretion lies with the Developer in approving building and site plans, specifications, fencing and landscaping plans which shall comply with the Design Guidelines provided by the Developer to the Developer's satisfaction; and

b) Which does not conform to the plans approved by the Developer. Any variation to or deviation from the approved plans will be a breach of this clause and subject to the provisions of clause 5.

PROVIDED THAT this clause 2.18 will cease to apply and be of no further effect from the date that a Code Compliance Certificate is issued for the first Dwelling to be built

SDC - Approved Building Consent Document - BC230326-Amendment 1 - Pg 55 of 61 - 29/09/2023 - steven.burnham

on the Lot if such Code Compliance Certificate relates to a Dwelling approved of by the Developer in accordance with this clause 2.18,

AND FURTHER PROVIDED THAT the Grantor acknowledges that the Developer has no legal responsibility or liability for the enforcement, enforceability or applicability of these covenants on an on-going basis.

2.19 Construction Fencing

Not commence construction on the Lot until temporary fencing has been erected on the entire length of all unfenced boundaries. The temporary fence must comprise removable wire or shade cloth (or other see-through material), be a minimum of 1.2 metres in height and have a rigid frame and in all circumstances be acceptable to the Developer at their sole discretion, and provide only one vehicle access to the Lot from the road.

2.20 Construction Zone Areas

Not commence construction on the Lot until a vehicle crossing of no more than four metres in width has been installed in a position approved by the Developer, the kerb cut down at the crossing and the driveway from the road to the Lot is formed and suitable based PROVIDED THAT such crossing width stated in this clause 2.20 shall not apply to the Development Lots (including any comprehensive development lots) whose vehicle crossing must be approved by the Developer under clause 2.18. The Grantor shall not make any use of the adjoining Lots (whether occupied or not) any berms (except at designated crossings) or footpaths for construction work or for access by vehicles.

2.21 Health and Safety Requirements

Not permit any construction unless the building site complies with the requirements of the Health and Safety at Work Act 2015 (or any enactment passed in its substitution) at all times.

2.22 Delivery of Materials

Not undertake or permit during the course of construction the loading, unloading, delivery, or storage of building materials other than within the boundaries of the Lot.

2.23 Building Rubbish

Not carry out any construction unless an adequate rubbish skip is present at all times (and regularly emptied or replaced) nor allow during the course of construction any rubbish to blow outside the boundaries of the Lot and in accordance with Environment Canterbury rules.

2.24 Washing of Vehicles

Not during the course of construction allow any vehicles to be washed down other than within the boundaries of the Lot, provided such washing is in compliance with any Environment Canterbury rules or standards.

2.25 Portable Toilet Facility

Not prior to construction commencing, the Grantor shall provide a suitable portable toilet facility for use by the Grantor's construction workers and contractors.

SDC - Approved Building Consent Document - BC230326-Amendment 1 - Pg 56 of 61 - 29/09/2023 - steven.burnham

RECORD OF TITLE
UNDER LAND TRANSFER ACT 2017
FREEHOLD

Search Copy

R.W. Muir
Registrar-General
of Land

Identifier **1086840**

Land Registration District **Canterbury**

Date Issued 22 December 2022

Prior References

1048974

Estate Fee Simple

Area 424 square metres more or less

Legal Description Lot 620 Deposited Plan 581780

Registered Owners

TKR Developments Limited

Interests

Subject to Part IV A Conservation Act 1987

Subject to Section 11 Crown Minerals Act 1991

Land Covenant in Covenant Instrument 12613059.13 - 22.12.2022 at 3:14 pm

12613059.17 Consent Notice pursuant to Section 221 Resource Management Act 1991 - 22.12.2022 at 3:14 pm

12613059.21 Consent Notice pursuant to Section 221 Resource Management Act 1991 - 22.12.2022 at 3:14 pm

SDC - Approved Building Consent Document - BC230326-Amendment 1 - Pg 57 of 61 - 29/09/2023 - steven.burnham

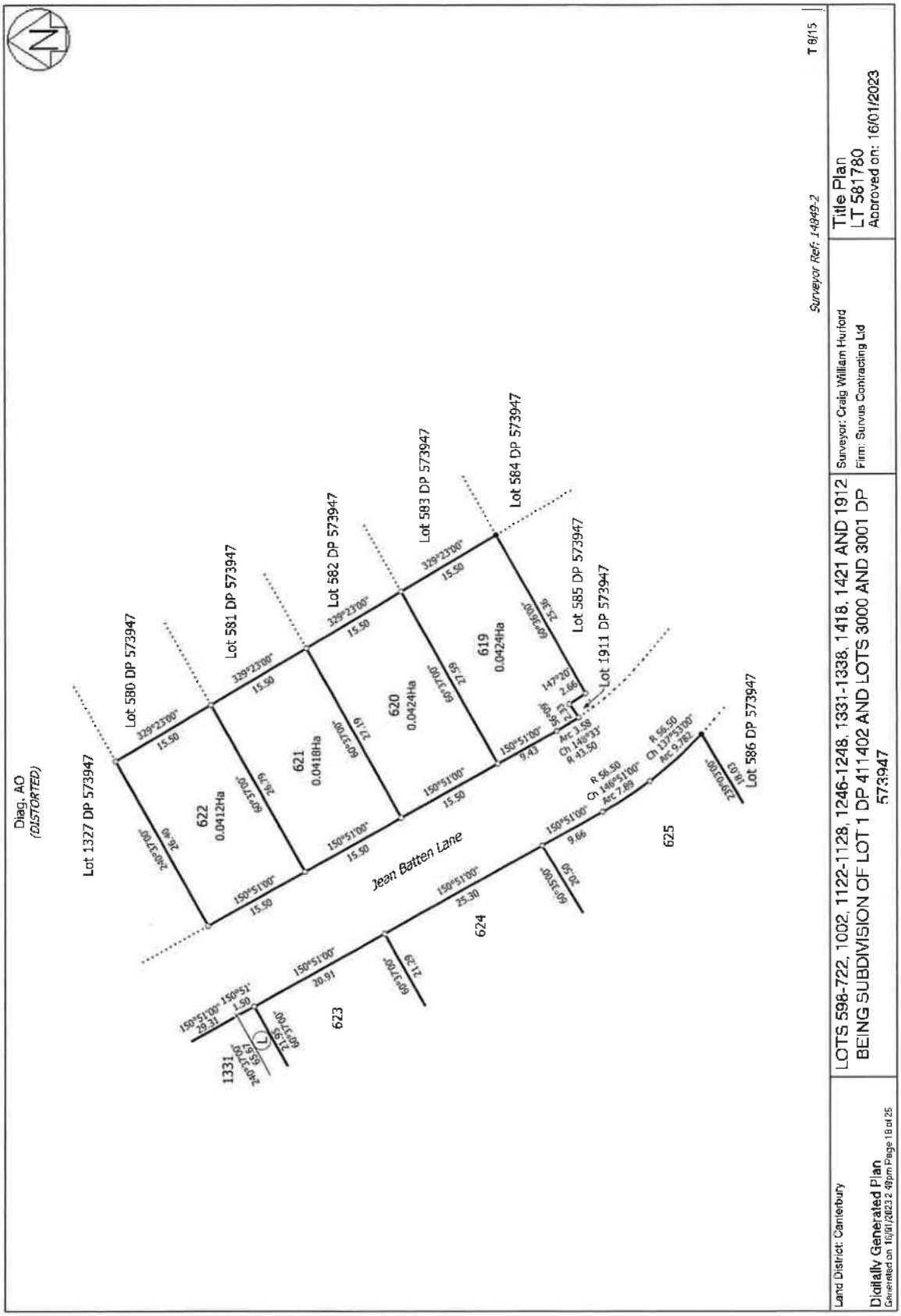

SCHEDULE 1

(GST Information – see clause 14.0)

This Schedule must be completed if the vendor has stated on the front page that the vendor is registered under the GST Act in respect of the transaction evidenced by this agreement and/or will be so registered at settlement. Otherwise there is no need to complete it.

SDC - Approved Building Consent Document - BC230326-Amendment 1 - Pg 58 of 61 - 29/09/2023 - steven.burnham

Section 1 Vendor		
1(a)	The vendor's registration number (if already registered): 122-368-890	
1(b)	(i) Part of the property is being used as a principal place of residence at the date of this agreement.	~~Yes~~/No
	(ii) That part is: (e.g. "the main farmhouse" or "the apartment above the shop")	~~Yes~~/No
	(iii) The supply of that part will be a taxable supply.	~~Yes~~/No
Section 2 Purchaser		
2(a)	The purchaser is registered under the GST Act and/or will be so registered at settlement. No	~~XXXXX~~
2(b)	The purchaser intends at settlement to use the property for making taxable supplies. No	~~XXXXX~~
If the answer to either or both of questions 2(a) and 2(b) is "No", go to question 2(e)		
2(c)	The purchaser's details are as follows:	
	(i) Full name: Ismael F. Pascual, Rachel D. Pascual & Marc Justine D. Pascual	
	(ii) Address: 574 Buckleys Road, Rd 7, Ashburton 7777	
	(iii) Registration number (if already registered):	
2(d)	The purchaser intends at settlement to use the property as a principal place of residence by the purchaser or by a person associated with the purchaser under section 2A(1)(c) of the GST Act (connected by blood relationship, marriage, civil union, de facto relationship or adoption).	Yes/~~No~~
	OR	
	The purchaser intends at settlement to use part of the property (and no other part) as a principal place of residence by the purchaser or by a person associated with the purchaser under section 2A(1)(c) of the GST Act. That part is: (e.g. "the main farmhouse" or "the apartment above the shop")	Yes/~~No~~
2(e)	The purchaser intends to direct the vendor to transfer title to the property to another party ("nominee").	~~Yes~~/No
If the answer to question 2(e) is "Yes", then please continue. Otherwise, there is no need to complete this Schedule any further.		
Section 3 Nominee		
3(a)	The nominee is registered under the GST Act and/or is expected by the purchaser to be so registered at settlement.	Yes/No
3(b)	The purchaser expects the nominee at settlement to use the property for making taxable supplies.	Yes/No
If the answer to either or both of questions 3(a) and 3(b) is "No", there is no need to complete this Schedule any further.		
3(c)	The nominee's details (if known to the purchaser) are as follows:	
	(i) Full name:	
	(ii) Address:	
	(iii) Registration number (if already registered):	
3(d)	The purchaser expects the nominee to intend at settlement to use the property as a principal place of residence by the nominee or by a person associated with the nominee under section 2A(1)(c) of the GST Act (connected by blood relationship, marriage, civil union, de facto relationship or adoption).	Yes/No
	OR	
	The purchaser expects the nominee to intend at settlement to use part of the property (and no other part) as a principal place of residence by the nominee or by a person associated with the nominee under section 2A(1)(c) of the GST Act. That part is: (e.g. "the main farmhouse" or "the apartment above the shop")	Yes/No

© ADLS & REINZ. All Rights Reserved.

RP

SDC - Approved Building Consent Document - BC230326-Amendment 1 - Pg 59 of 61 - 29/09/2023 - steven.burnham

SCHEDULE 2

List all chattels included in the sale

(Strike out or add as applicable. If necessary complete on a separate schedule or the further terms of sale)

Not used

SCHEDULE 3

Residential Tenancies

Not used

RP

© ADLS & REINZ. All Rights Reserved.

WARNING AND DISCLAIMER

- This agreement is a standard form document. It is therefore likely that amendments and additions may need to be made in order to suit the circumstances of each of the vendor and the purchaser, and to suit the particular property involved. It is also important that you are certain that any amendments made correctly reflect your understanding of what has been agreed. **You should always get legal advice before you sign the agreement and throughout the buying and selling process.**
- ADLS and REINZ accept no liability whatsoever in respect of this document and any agreement which may arise from it.
- The vendor should check the correctness of all warranties made under clause 7, clause 8, and elsewhere in this agreement.
- In the case of a unit title, before the purchaser enters into the agreement, the vendor **must** provide to the purchaser a pre-contract disclosure statement under section 146 of the Unit Titles Act.
- The transaction may have tax implications for the parties and it is recommended that both parties seek their own professional advice regarding the tax implications of the transaction before signing, including:
  - the GST treatment of the transaction, which depends upon the GST information supplied by the parties and could change before settlement if that information changes; and
  - the income tax treatment of the transaction, including any income tax implications of purchase price allocation.

PROFESSIONAL ADVICE SHOULD BE SOUGHT REGARDING THE EFFECT AND CONSEQUENCES OF ANY AGREEMENT ENTERED INTO BETWEEN THE PARTIES.

Acknowledgements

Where this agreement relates to the sale of a residential property and this agreement was provided to the parties by a real estate agent, or by a licensee on behalf of the agent, the parties acknowledge that they have been given the guide about the sale of residential property approved by the Real Estate Authority and a copy of the agency's in-house complaints and dispute resolution process.

The person or persons signing this agreement acknowledge that either:

(a) they are signing in a personal capacity as the 'vendor' or 'purchaser' named on the front page, or

(b) they have authority to bind the party named as 'vendor' or 'purchaser' on the front page.

WARNING *(This warning does not form part of this agreement)*

Before signing, each party should read this entire contract and should obtain all relevant professional advice.

This is a binding contract. Once signed, you will be bound by the terms of it and there may be no, or only limited, rights to terminate it.

Signature of Purchaser(s):

Director / Trustee / Authorised Signatory / Agent / Attorney*
Delete the options that do not apply

Director / Trustee / Authorised Signatory / Agent / Attorney*
Delete the options that do not apply

Signature of Vendor(s):

Director / ~~Trustee / Authorised Signatory / Agent / Attorney~~*
Delete the options that do not apply

Director / Trustee / Authorised Signatory / Agent / Attorney*
Delete the options that do not apply

* If this agreement is signed under:

(i) a Power of Attorney – please attach a Certificate of non-revocation (available from ADLS: 4098WFP or REINZ); or

(ii) an Enduring Power of Attorney – please attach a Certificate of non-revocation and non-suspension of the enduring power of attorney (available from ADLS: 4997WFP or REINZ).

Also insert the following wording for the Attorney's Signature above:

Signed for [full name of the donor] by his or her Attorney [attorney's signature].

SDC - Approved Building Consent Document - BC230326 Amendment 1 - 29/09/2023 - steven.burnham - Page 60 of 64

RP

MP

© ADLS & REINZ. All Rights Reserved.

AGREEMENT FOR SALE AND PURCHASE OF REAL ESTATE

SDC - Approved Building Consent Document - BC230326-Amendment 1 - Pg 61 of 61 - 29/09/2023 - steven.burnham

DATE: 10th AUGUST 2023

VENDOR: TKR Developments Limited

Contact Details: PO Box 11-351, Sockburn, Christchurch
tkr@signature.co.nz

VENDOR'S LAWYERS:

Firm: Saunders and Co

Individual Acting: Bronwyne Hill

Email:

Contact Details: bronwyne.hill@saunders.co.nz

Email address for service of notices (clause 1.4): as above

PURCHASER: Ismael F. Pascual, Rachel D. Pascual & Marc Justine D. Pascual

Contact Details: 574 Buckleys Road, Rd 7, Ashburton 7777

PURCHASER'S LAWYERS:

Firm: Davidson Legal

Individual Acting: Diane Newenham

Email:

Contact Details:

Email address for service of notices (clause 1.4):

SALE BY LICENSED REAL ESTATE AGENT:

Manager:

Salesperson:

Second Salesperson:

Contact Details:

Licensed Real Estate Agent under Real Estate Agents Act 2008

© Auckland District Law Society Inc. (ADLS) & Real Estate Institute of New Zealand Inc. (REINZ)
IMPORTANT WARNING: All copyright in and associated with this form and its contents is owned by ADLS & REINZ. A user of this form only acquires a limited non-exclusive licence to use it *once within a single transaction only*. The standard ADLS & REINZ contract terms apply, which also prohibit any form of distribution, on-selling, or reproduction, including copying, digitising or recreating the form by any means whatsoever.
ADLS & REINZ monitor the use of this form and may take enforcement action against any person acting in breach of these obligations. Copying or digitising this form and altering its standard text, without clearly identifying the alterations, is prohibited, and, in addition to copyright infringement, may also be a breach of the Fair Trading Act 1986 and misrepresentation.