AAI3008
Large Language Models
Evaluation Metrics

Zhang Zhengchen
zhengchen.zhang@singaporetech.edu.sg

Outline

- Tasks & Evaluation Metrics
- Question Answer
  - BERTScore
- Machine Translation
  - BLEU
- Chatbot
  - Task-Oriented Dialogue
- Perplexity

Question Answering (QA)

- Given a question, the system produces an answer in natural language
- The answer is usually short (a word, phrase, or short sentence)
- QA often requires understanding and reasoning over supporting context
  - documents, passages, or conversation history
- Many QA tasks are fact-based and have a clear reference answer

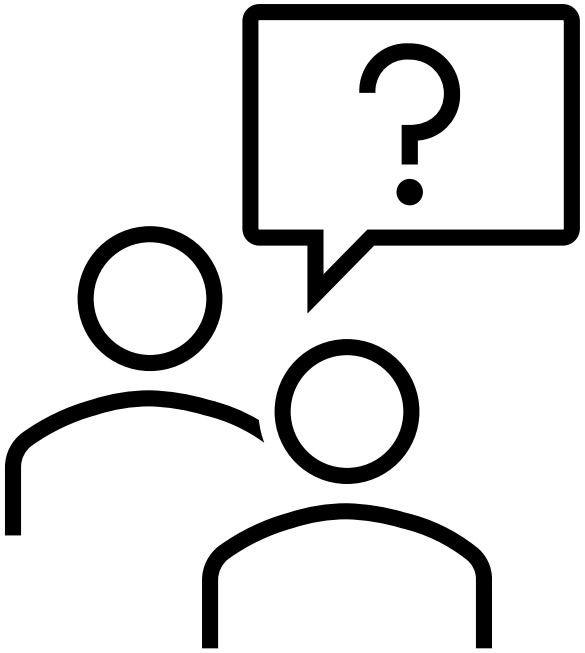

Extractive QA - TriviaQA

- TriviaQA consists of trivia-style questions, where models must find and **extract** the correct answer from a collection of supporting documents.

- TriviaQA includes **95K question-answer pairs** and independently gathered evidence documents, six per question on average.

Question: The Dodecanese Campaign of WWII that was an attempt by the Allied forces to capture islands in the Aegean Sea was the inspiration for which acclaimed 1961 commando film?
Answer: The Guns of Navarone
Excerpt: The Dodecanese Campaign of World War II was an attempt by Allied forces to capture the Italian-held Dodecanese islands in the Aegean Sea following the surrender of Italy in September 1943, and use them as bases against the German-controlled Balkans. The failed campaign, and in particular the Battle of Leros, inspired the 1957 novel **The Guns of Navarone** and the successful 1961 movie of the same name.

A Question-answer pair with sample excerpts from evidence documents from TriviaQA.
https://aclanthology.org/P17-1147.pdf

Extractive QA (Span-based)

- In extractive QA, the answer is assumed to be a contiguous span of text within the given passage.
- The system predicts:
  - a start position, and
  - an end position in the context passage
- The predicted span is treated as the final answer.

Abstractive QA - CoQA

- CoQA, a novel dataset for building **Co**nversational **Q**uestion **A**nswering systems.
- CoQA contains 127k questions with answers, obtained from 8k conversations about text passages from seven diverse domains.
- The questions are conversational, and the answers are free-form text with their corresponding evidence highlighted in the passage.

Jessica went to sit in her rocking chair. Today was her birthday and she was turning 80. Her granddaughter Annie was coming over in the afternoon and Jessica was very excited to see her. Her daughter Melanie and Melanie's husband Josh were coming as well. Jessica had . . .

Q_1: Who had a birthday?
A_1: Jessica
R_1: Jessica went to sit in her rocking chair. Today was her birthday and she was turning 80.

Q_2: How old would she be?
A_2: 80
R_2: she was turning 80

Q_3: Did she plan to have any visitors?
A_3: Yes
R_3: Her granddaughter Annie was coming over

Q_4: How many?
A_4: Three
R_4: Her granddaughter Annie was coming over in the afternoon and Jessica was very excited to see her. Her daughter Melanie and Melanie's husband Josh were coming as well.

Q_5: Who?
A_5: Annie, Melanie and Josh
R_5: Her granddaughter Annie was coming over in the afternoon and Jessica was very excited to see her. Her daughter Melanie and Melanie's husband Josh were coming as well.

Figure 1: A conversation from the CoQA dataset. Each turn contains a question (Q_i), an answer (A_i) and a rationale (R_i) that supports the answer.

https://arxiv.org/pdf/1808.07042

Evaluation – F1

- **F1 is computed based on word overlap** between the predicted answer and the gold (correct) answer.

Formula for F1 Score

$$F1 = \frac{2 \times \text{Precision} \times \text{Recall}}{\text{Precision} + \text{Recall}}$$

Where:

- **Precision** = (Number of overlapping words) / (Total words in the predicted answer)
- **Recall** = (Number of overlapping words) / (Total words in the ground-truth answer)

https://nlp.cs.washington.edu/triviaqa/

Abstractive (Generative) QA

- In generative QA, the system is allowed to generate a free-form answer based on the information in the context passage.
- The answer may:
  - paraphrase the passage
  - combine information from multiple sentences
  - not appear verbatim in the text

Evaluation - BERTScore

- A good answer may use alternate words or paraphrases
- Instead of exact matches, we compute **token similarity** using contextual embeddings

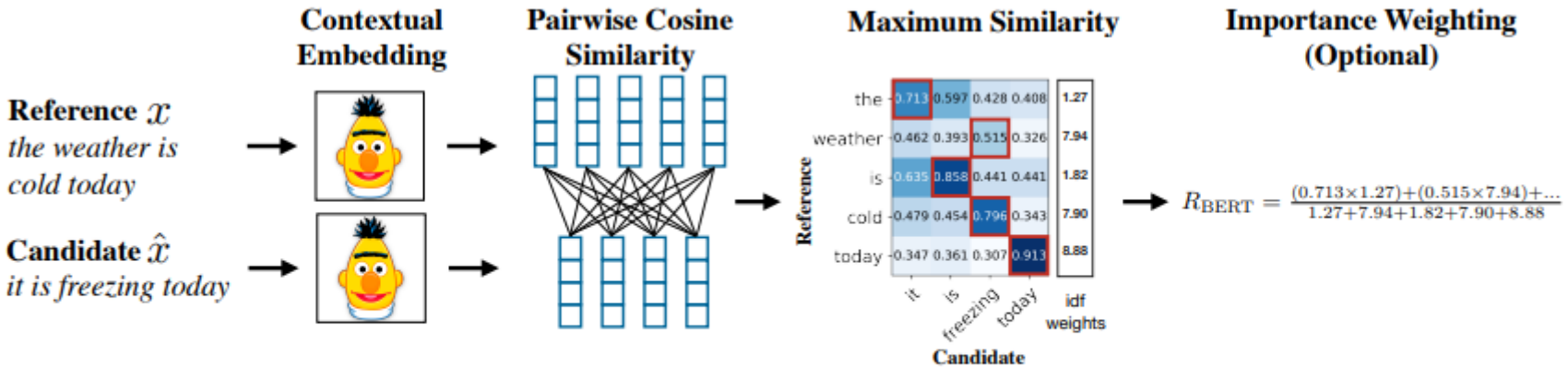

Figure 1: Illustration of the computation of the recall metric R_{BERT}. Given the reference x and candidate $\hat{x}$, we compute BERT embeddings and pairwise cosine similarity. We highlight the greedy matching in red, and include the optional idf importance weighting.

Zhang T, Kishore V, Wu F, et al. Bertscore: Evaluating text generation with bert[J]. arXiv preprint arXiv:1904.09675, 2019. https://arxiv.org/pdf/1904.09675

Evaluation - BERTScore

- The reference x and the candidate $\hat{x}$
- Token Embedding
  - Compute a BERT embedding for each token x_i and $\hat{x}_j$.
- Token Alignment
  - Each pair of tokens $(x_i, \hat{x}_j)$ is scored by its cosine similarity.
  - For each token in the candidate, it finds the most similar token in the reference.
- Aggregation
  - Scores for all token pairs are aggregated to compute precision, recall, and F1-score
  - Precision: How well candidate tokens match reference tokens.
  - Recall: How well reference tokens are covered by candidate tokens.
  - F1-score: Harmonic mean of precision and recall (main evaluation score).

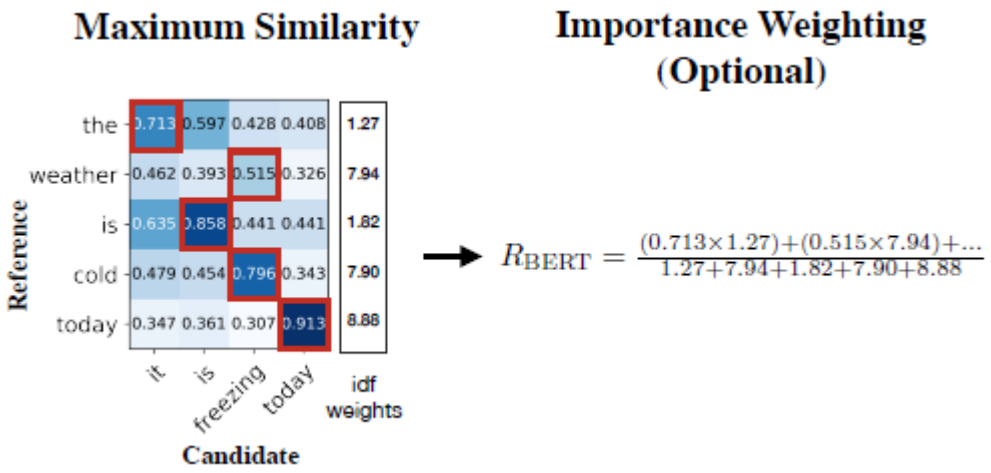

$$R_{\text{BERT}} = \frac{1}{|x|}\sum_{x_i\in x}\max_{\hat{x}_j\in\hat{x}} \mathbf{x}_i^\top \hat{\mathbf{x}}_j \quad , \quad P_{\text{BERT}} = \frac{1}{|\hat{x}|}\sum_{\hat{x}_j\in\hat{x}}\max_{x_i\in x} \mathbf{x}_i^\top \hat{\mathbf{x}}_j \quad , \quad F_{\text{BERT}} = 2\frac{P_{\text{BERT}}\cdot R_{\text{BERT}}}{P_{\text{BERT}}+R_{\text{BERT}}} \quad .$$

Evaluation - BERTScore

- IDF weights
  - Not all tokens are equally important
  - Common words (e.g., the, is, today) should contribute less
  - Content words (e.g., freezing, Navarone, campaign) should contribute more

- Assign an importance weight to each token
- IDF (Inverse Document Frequency)
  - Rare tokens → higher weight
  - Frequent tokens → lower weight

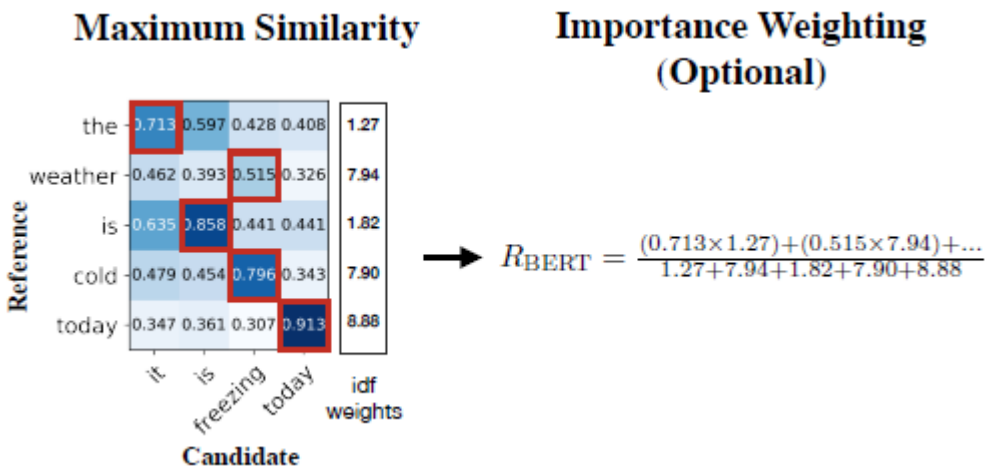

with inverse document frequency (idf) scores computed from the test corpus. Given M reference sentences $\{x^{(i)}\}_{i=1}^{M}$, the idf score of a word-piece token w is

$$\text{idf}(w) = -\log \frac{1}{M} \sum_{i=1}^{M} \mathbb{I}[w \in x^{(i)}] \ ,$$

where $\mathbb{I}[\cdot]$ is an indicator function. We do not use the full tf-idf measure because we process single

$$R_{\text{BERT}} = \frac{\sum_{x_i \in x} \text{idf}(x_i) \max_{\hat{x}_j \in \hat{x}} \mathbf{x}_i^\top \hat{\mathbf{x}}_j}{\sum_{x_i \in x} \text{idf}(x_i)} \ .$$

Machine Translation (MT)

- Given a sentence in a source language, the system generates a sentence in a target language
- Machine translation is typically modelled as a sequence-to-sequence generation task
- Given a source sentence, the model generates the target sentence token by token

Encoder - Decoder

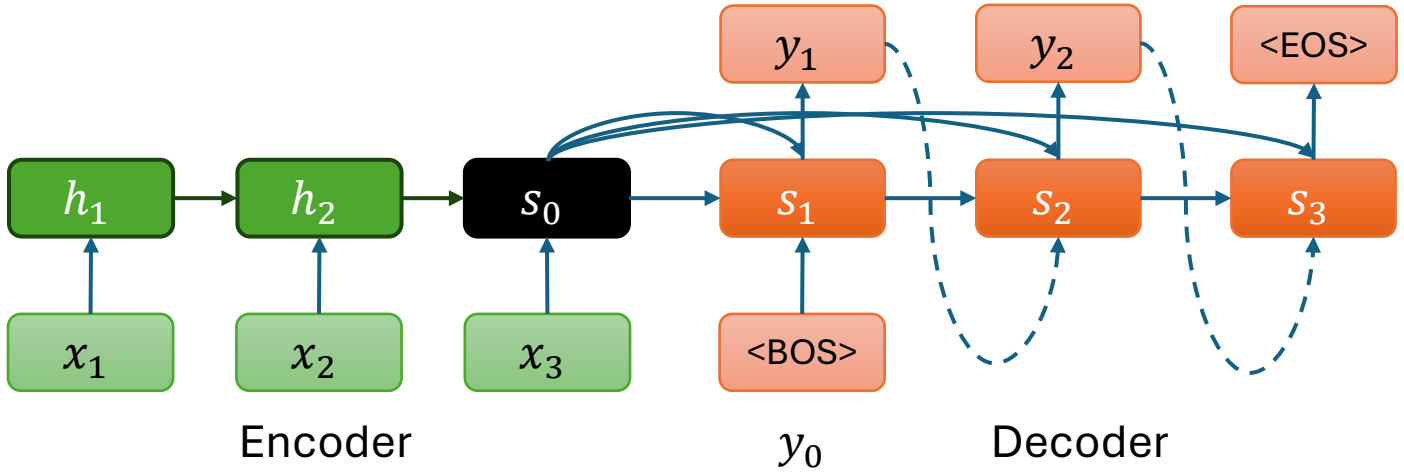

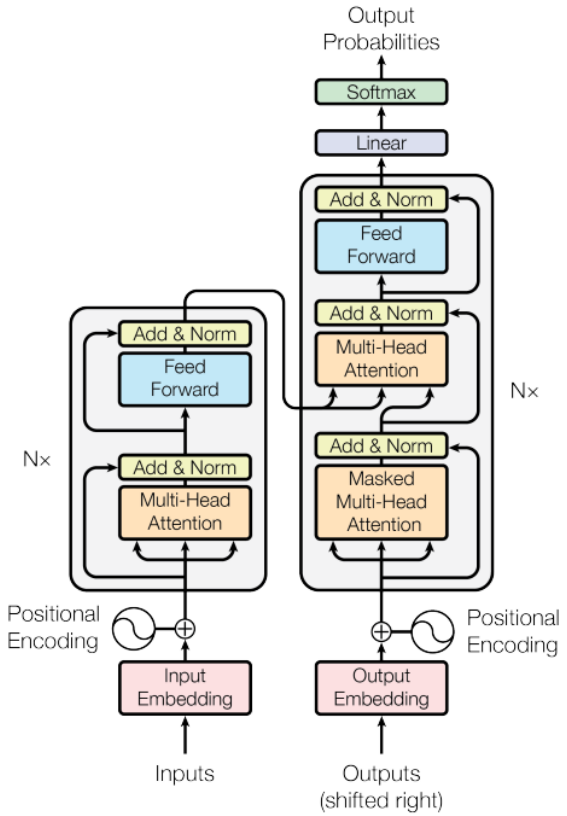

Figure 1: The Transformer - model architecture.

Do We Always Need Top-1 Token Selection in Decoder Generation?

- Decoding in the inference stage
- Greedy decoding
  - At each time step t in generation, the output y_t is generated by choosing the highest probability word
  - What looks high probability at word t might turn out to have been the wrong choice once we get to word $t + 1$.

https://towardsdatascience.com/foundations-of-nlp-explained-visually-beam-search-how-it-works-1586b9849a24

Beam Search*

- Instead of choosing the best token to generate at each timestep, we keep k possible tokens at each step.

- This fixed-size beam width memory footprint ***k* is called the beam width.**

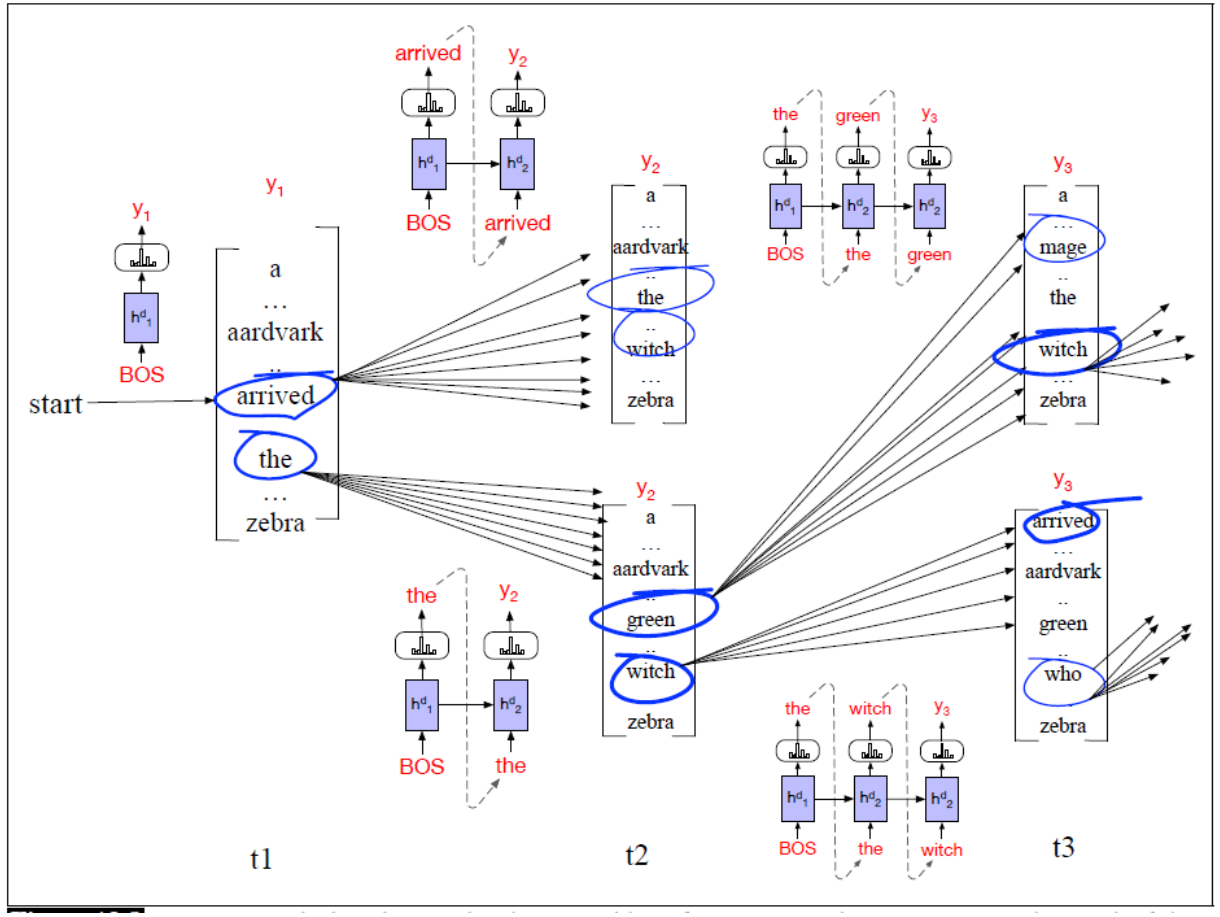

Figure 13.8 Beam search decoding with a beam width of $k = 2$. At each time step, we choose the k best hypotheses, form the V possible extensions of each, score those $k \times V$ hypotheses and choose the best $k = 2$ to continue. At time 1, the frontier has the best 2 options from the initial decoder state: *arrived* and *the*. We extend each, compute the probability of all the hypotheses so far (*arrived the*, *arrived aardvark*, *the green*, *the witch*) and again chose the best 2 (*the green* and *the witch*) to be the search frontier. The images on the arcs schematically represent the decoders that must be run at each step to score the next words (for simplicity not depicting cross-attention).

Beam Search*

- Handling Probability Multiplication
- $$P(W) = P(w_1) \times P(w_2 \mid w_1) \times P(w_3 \mid w_2, w_1) \times \cdots$$
- This results in **underflow**, making computation difficult.

$$\log(a \times b) = \log a + \log b$$

$$\log P(W) = \sum \log P(w_i)$$

$$\log_{10} 0.1 = -1$$

Evaluation - BLEU

- **Bilingual Evaluation Understudy**

$$BLEU = BP \times \exp\left(\sum_{n=1}^{N} w_n \log p_n\right)$$

- Where:
  - p_n is the precision of n-grams (unigram, bigram, etc.)
    - Number of matched n-grams divided by number of total n-grams in the predicted candidate
    - Any $p_n = 0$, $\log 0 = -\infty$, $BLEU = e^{-\infty} = 0$
  - N is set to 4 or 5
  - w_n is the weight assigned to each n-gram level (typically equal weights)
    - N=2, $w_1 = w_2 = \frac{1}{2} = 0.5$
  - BP: **brevity penalty**, which prevents shorter sentences from getting artificially high scores
  - $BP = \begin{cases} 1 & if\ c > r \\ e^{(1-r/c)} & if\ c \leq r \end{cases}$ where c is the length of generated text, and r is the length of reference text

Bilingual Evaluation Understudy*

- ‘Understudy’ is an actor who learns a role to substitute for the main performer when necessary.
- The name cleverly suggests that BLEU serves as a stand-in for human evaluators.

https://mbrenndoerfer.com/writing/history-bleu-metric-evaluation

Machine Translation - LLM

Findings of the WMT24 General Machine Translation Shared Task: The LLM Era is Here but MT is Not Solved Yet

- The WMT 2024 General Machine Translation Task **covered 11 translation pairs, two of which are non-English**: Czech→Ukrainian and Japanese→Chinese.
- The **majority of participants already use LLMs** in their systems.
- The best performing open system is IOLResearch (wins 10 language pairs (LPs) in it's category)
- The best performing participating system is **UnbabelTower70B** (wins 8 LPs)
- The best performing system in general is Claude-3.5-Sonnet (wins 9 LPs)

https://www2.statmt.org/wmt24/
https://www2.statmt.org/wmt24/pdf/2024.wmt-1.1.pdf

Machine Translation - LLM

- Ninth Conference on Machine Translation (WMT24)
- Low-Resource
- Domain Specific

OVERVIEW AND SHARED TASKS

This year's conference will feature the following shared tasks:

- a general translation task (former News task),
- a translation into low-resource languages of Spain task,
- a Low-Resource Indic Language Translation,
- a Metrics Task,
- a Chat Translation Task
- a Biomedical Translation Task
- a MT test suites sub-task
- an Open Language Data shared task
- a Quality Estimation Task
- a English-LowRes Multimodal Translation Task
- a Non-Repetitive Translation Task
- a Patent Task
- a Literary Translation Task
- a Patent Task

https://www2.statmt.org/wmt24/

Outline

- Evaluation Metrics
- Machine Translation
- **Chatbot**
  - Task-Oriented Dialogue
- Perplexity

Chatbot

- Task-Oriented Dialogue
- Intent determination
  - What general task is the determination user trying to accomplish?
  - Book a flight
- Slot filling
  - Slot: a key information unit

Slot	Type	Example Question
ORIGIN CITY	city	"From what city are you leaving?"
DESTINATION CITY	city	"Where are you going?"
DEPARTURE TIME	time	"When would you like to leave?"
DEPARTURE DATE	date	"What day would you like to leave?"
ARRIVAL TIME	time	"When do you want to arrive?"
ARRIVAL DATE	date	"What day would you like to arrive?"

Figure 15.4 A frame in a frame-based dialogue system, showing the type of each slot and a sample question used to fill the slot.

Task-Oriented Dialogue

- Dialogue State Tracking
  - Keeps track of the current state of the conversation
    - User's goals
    - Provided information
    - Missing information
- Policy
  - Decides the next system action
    - Request missing information
    - Confirm
    - Do the task
- Natural Language Generation

```
if "departure" not in state:
    return "Where are you departing from?"
elif "destination" not in state:
    return "Where do you want to go?"
```

Task-Oriented Dialogue

- Are Large Language Models All You Need for Task-Oriented Dialogue?
  - Prompt engineering
  - The answer is NO

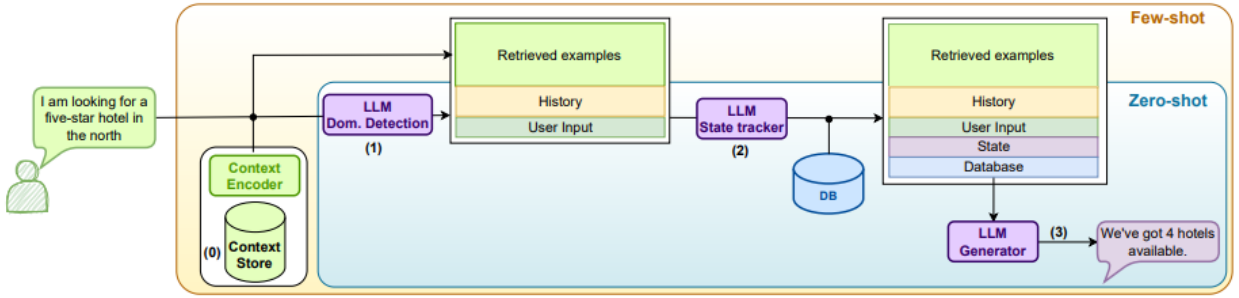

Figure 2: A detailed description of our proposed pipeline. (0) As a preprocessing step, we encode a subset of the training set that will be used to retrieve few-shot examples. Given the user input, we: (1) Detect the domain, retrieve relevant examples (in the few-shot setting) and construct an initial prompt. (2) Infer the belief state using LLM. Based on that, we retrieve database information and construct another prompt that includes both the state and database results. (3) We ask the LLM to provide a final response.

Hudeček V, Dušek O. Are Large Language Models All You Need for Task-Oriented Dialogue?[C]//Proceedings of the 24th Annual Meeting of the Special Interest Group on Discourse and Dialogue. 2023: 216-228. https://sigdialinlg2023.github.io/static/papers/sigdial/25_Paper.pdf

Evaluation of TOD

- Task success rate
  - The percentage of times the system booked the right plane flight
  - Or put the right event on the calendar
- Slot error rate

$$\text{Slot Error Rate for a Sentence} = \frac{\text{\# of inserted/deleted/subsituted slots}}{\text{\# of total reference slots for sentence}}$$

  - Make an appointment with Chris at 10:30 in Gates 104

Slot	Filler
PERSON	Chris
TIME	11:30 a.m.
ROOM	Gates 104

  - Slot error rate is 1/3

Outline

- Evaluation Metrics
- Machine Translation
- Chatbot
- **Perplexity**

Perplexity

- In early NLP systems such as Automatic Speech Recognition (ASR), language models were not used to generate text, but to score candidate sentences.
- Given multiple transcription candidates produced by the acoustic model, the language model assigns probabilities to determine **which sentence is more likely to be natural human language**.

- Acoustic model outputs:
  - I want to eat a pizza
  - I want to eat a visa
- Language model scoring:
  - Which sentence is more possible
  - $P(s) = \prod_i p(w_i | w_{<i})$
  - The sentence probability is the product of conditional token probabilities

Perplexity

- Modern large language models use the same definition of perplexity.
  - Which sentence is more possible
  - How likely is a given sentence under the model?
  - $P(s) = P(w_1 w_2 \dots w_N) = \prod_i p(w_i | w_{<i})$

- A practical issue: sentence length
  - For long sentences, $P(w_1 w_2 \dots w_N)$ becomes extremely small
  - $perplexity(W) = P(w_1 w_2 \dots w_N)^{-\frac{1}{N}} = \sqrt[N]{\frac{1}{P(w_1 w_2 \dots w_N)}}$
  - The $-{}^{1}/_{N}$ normalization removes sentence-length effects and turns sentence probability into a per-token average measure.

Perplexity

- The probability comes from the LLM itself
- The model assigns probabilities via its own softmax output.
- No explicit word-count statistics are used.
- *Same definition, different source of probability.*

Perplexity

$$perplexity(W) = \sqrt[N]{\prod_{i=1}^{N} \frac{1}{P(w_i | w_{i-1}, \dots, w_1)}}$$

- The higher the probability, the lower the perplexity.
- The smaller the probability, the more confused the model is.
- **Lower perplexity means the model is more confident in its predictions**, while higher perplexity suggests it is more uncertain.
- If a model is perfectly predicting the test data (assigns probability 1 to the correct words), its perplexity is 1.

Perplexity*

- Bigram

$$P(w_1, w_2, \dots, w_T) = \prod_{t=1}^{T} P(w_t | w_{t-1})$$

- Trigram

$$P(w_1, w_2, \dots, w_T) = \prod_{t=1}^{T} P(w_t | w_{t-1}, w_{t-2})$$

- Causal Language Modelling

$$P(w_1, w_2, \dots, w_T) = \prod_{t=1}^{T} P(w_t | w_{t-1}, w_{t-2}, \dots, w_1)$$

- $perplexity(W) = P(w_1 w_2 \dots w_N)^{-\frac{1}{N}} = \sqrt[N]{\frac{1}{P(w_1 w_2 \dots w_N)}}$

Perplexity

- A perplexity (PPL) of 1.92 is extremely low.
- Often considered near-human-level performance for token-level language modelling.
- Perplexity measures model confidence, and achieving very high confidence on real language is itself very hard.

Setting	LAMBADA (acc)	LAMBADA (ppl)	StoryCloze (acc)	HellaSwag (acc)
SOTA	68.0[a]	8.63[b]	**91.8**[c]	**85.6**[d]
GPT-3 Zero-Shot	**76.2**	**3.00**	83.2	78.9
GPT-3 One-Shot	**72.5**	**3.35**	84.7	78.1
GPT-3 Few-Shot	**86.4**	**1.92**	87.7	79.3

Table 3.1: Performance on cloze and completion tasks. GPT-3 significantly improves SOTA on LAMBADA while achieving respectable performance on two difficult completion prediction datasets. [a][Tur20] [b][RWC+19] [c][LDL19] [d][LCH+20]

Learning Outcome

- Understand how different NLP tasks (QA, Machine Translation, and Chatbots) require different evaluation strategies
- Explain why F1 is suitable for fact-based Question Answering tasks
- Understand how BLEU is used for evaluating Machine Translation and text generation
- Recognize the limitations of word-overlap metrics (e.g., BLEU) and the motivation behind semantic evaluation methods such as BERTScore
- Recognize Perplexity as an intrinsic metric for evaluating language models