eDP/LVDS

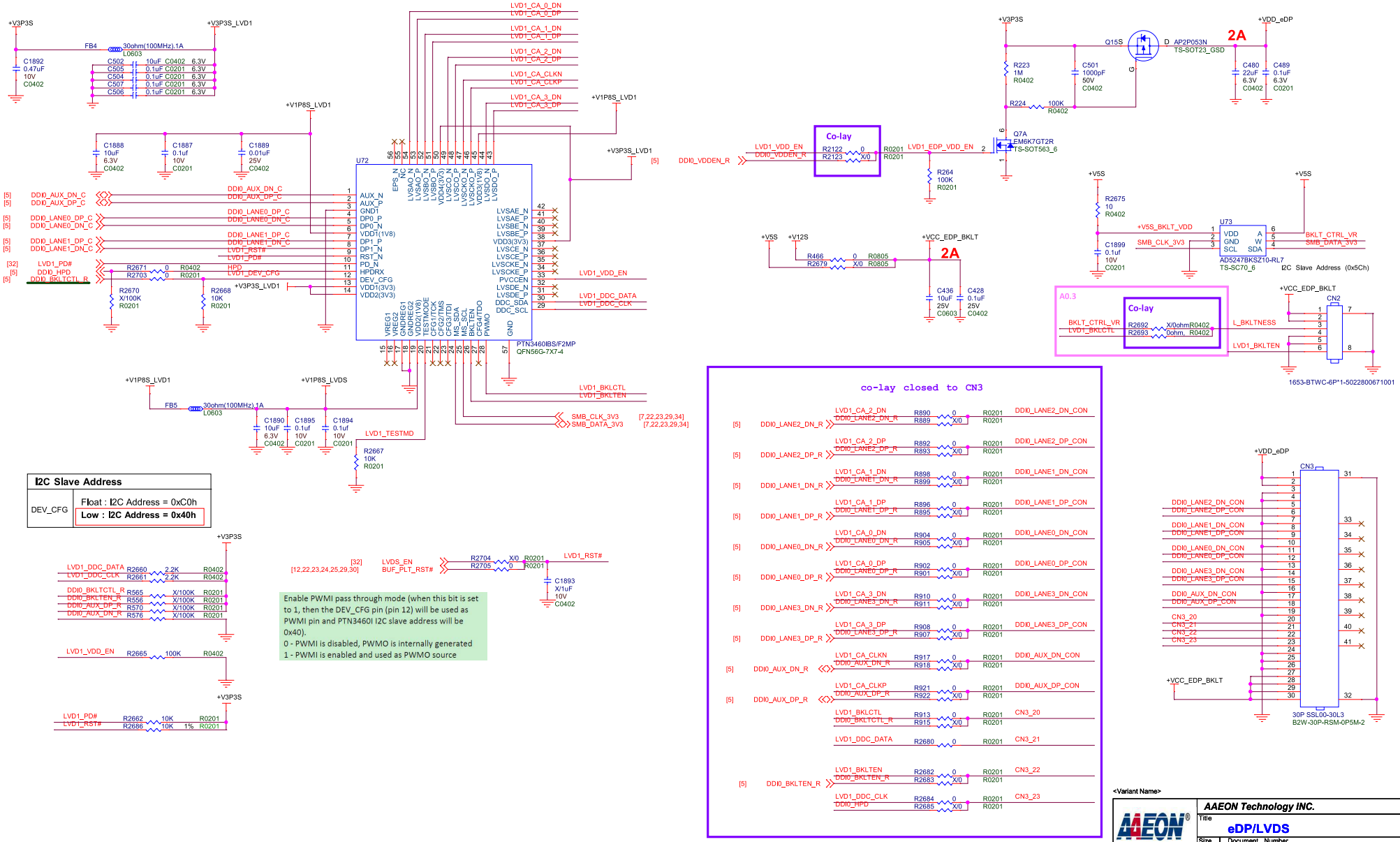

<Variant Name>

AAEON Technology INC.

Title: eDP/LVDS

Size: Custom | Document Number: PICO-EHL4 | Rev: A0.3_0_0

Date: Wednesday, January 06, 2021 | Sheet 21 of 45

DDI1 to HDMI1

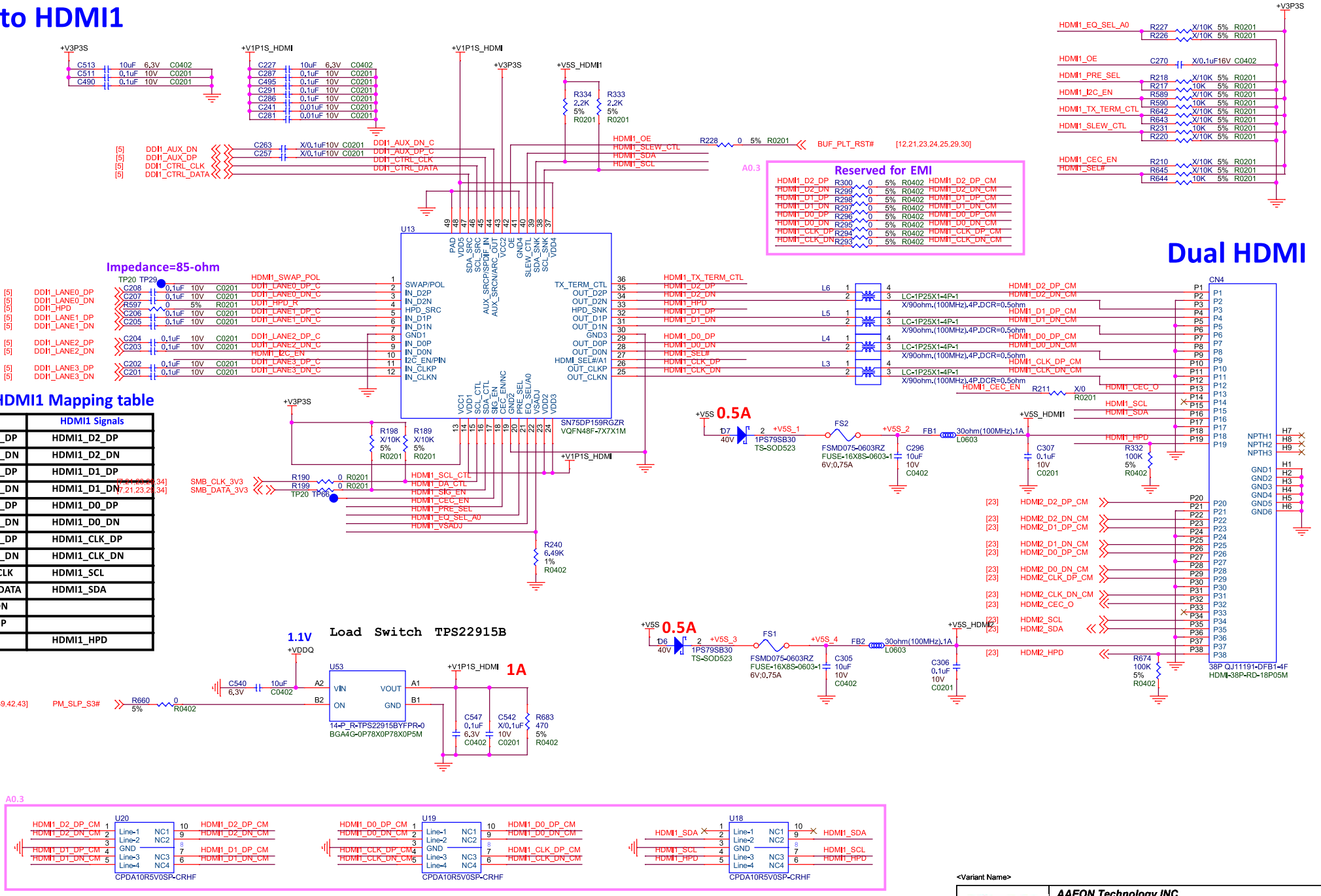

DDI1 to HDMI1 Mapping table

DDI1 Pairs	HDMI1 Signals
DDI1_LANE0_DP	HDMI1_D2_DP
DDI1_LANE0_DN	HDMI1_D2_DN
DDI1_LANE1_DP	HDMI1_D1_DP
DDI1_LANE1_DN	HDMI1_D1_DN
DDI1_LANE2_DP	HDMI1_D0_DP
DDI1_LANE2_DN	HDMI1_D0_DN
DDI1_LANE3_DP	HDMI1_CLK_DP
DDI1_LANE3_DN	HDMI1_CLK_DN
DDI1_CTRL_CLK	HDMI1_SCL
DDI1_CTRL_DATA	HDMI1_SDA
DDI1_AUX_DN	
DDI1_AUX_DP	
DDI1_HPD	HDMI1_HPD

DDI2 to HDMI2

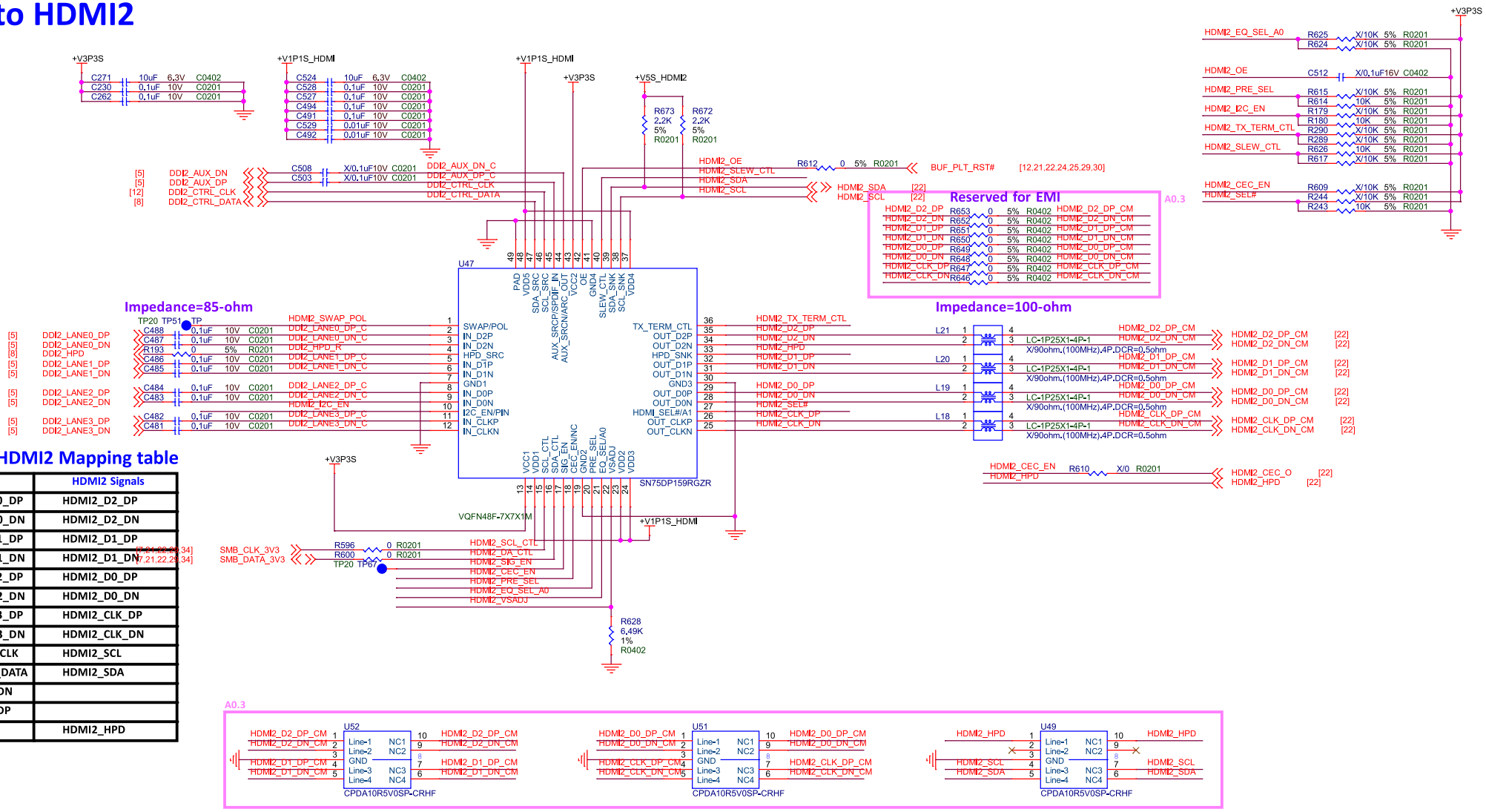

DDI2 to HDMI2 Mapping table

DDI2 Pairs	HDMI2 Signals
DDI2_LANE0_DP	HDMI2_D2_DP
DDI2_LANE0_DN	HDMI2_D2_DN
DDI2_LANE1_DP	HDMI2_D1_DP
DDI2_LANE1_DN	HDMI2_D1_DN
DDI2_LANE2_DP	HDMI2_D0_DP
DDI2_LANE2_DN	HDMI2_D0_DN
DDI2_LANE3_DP	HDMI2_CLK_DP
DDI2_LANE3_DN	HDMI2_CLK_DN
DDI2_CTRL_CLK	HDMI2_SCL
DDI2_CTRL_DATA	HDMI2_SDA
DDI2_AUX_DN	
DDI2_AUX_DP	
DDI2_HPD	HDMI2_HPD

LAN1

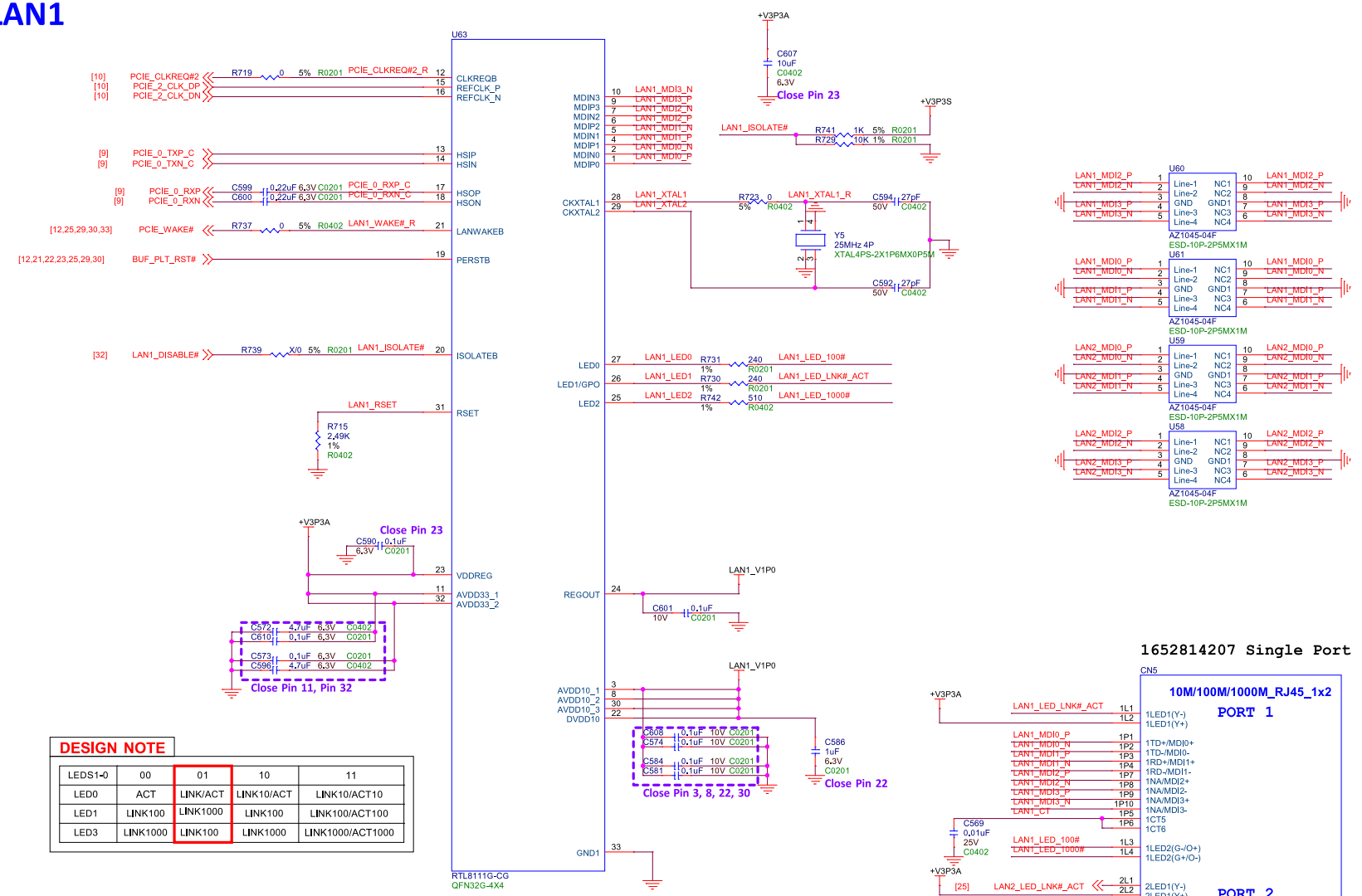

DESIGN NOTE

LEDS1-0	00	01	10	11
LED0	ACT	LINK/ACT	LINK10/ACT	LINK10/ACT10
LED1	LINK100	LINK1000	LINK100	LINK100/ACT100
LED3	LINK1000	LINK100	LINK1000	LINK1000/ACT1000

1652814207 Single Port

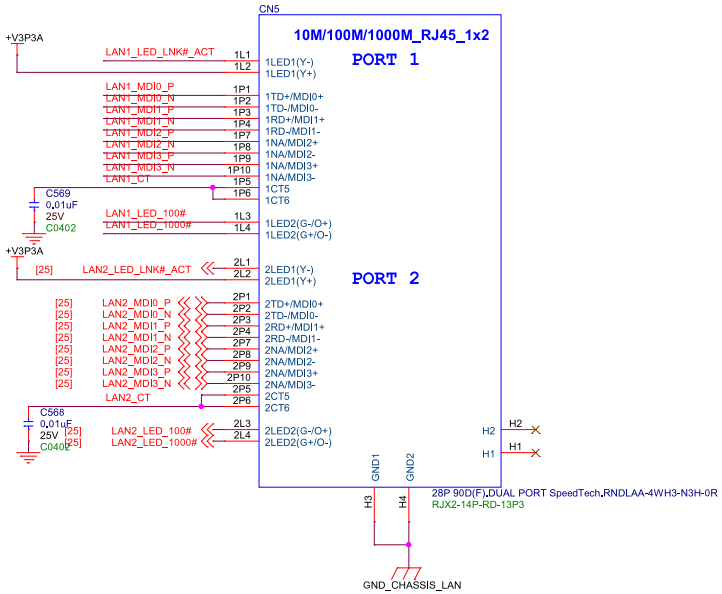

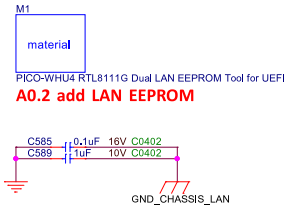

Co-layout

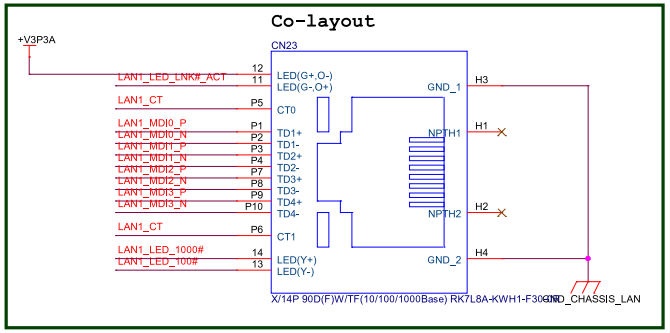

<Variant Name>

AAEON Technology INC.		
Title: LAN1		
Size: Custom	Document Number: PICO-EHL4	Rev: A0.3_0_0
Date: Wednesday, January 06, 2021	Sheet 24 of 45	

LAN2

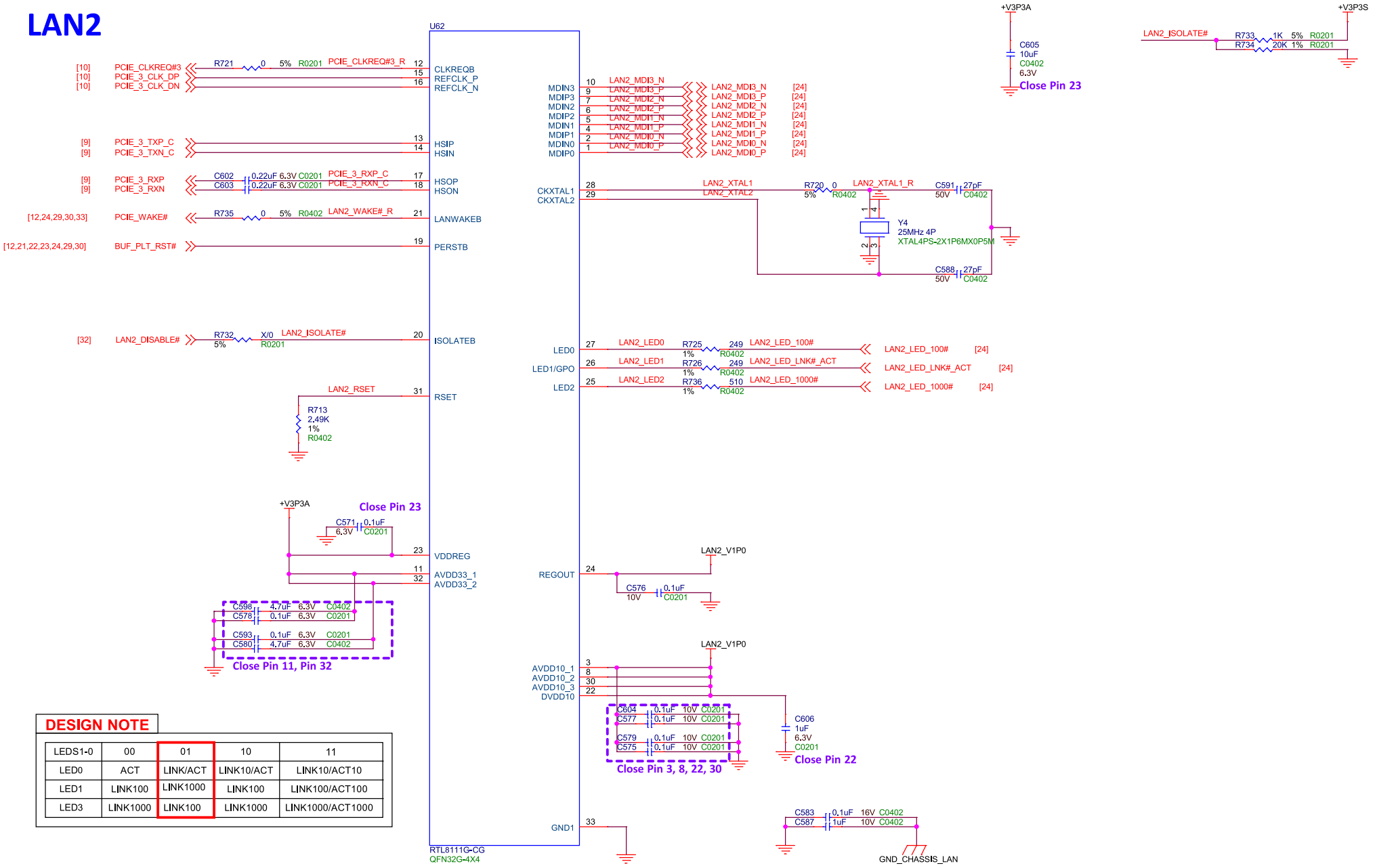

DESIGN NOTE

LEDS1-0	00	01	10	11
LED0	ACT	LINK/ACT	LINK10/ACT	LINK10/ACT10
LED1	LINK100	LINK1000	LINK100	LINK100/ACT100
LED3	LINK1000	LINK100	LINK1000	LINK1000/ACT1000

<Variant Name>

AAEON Technology INC.

Title: LAN2

Size: Custom | Document Number: PICO-EHL4 | Rev: A0.3_0_0

Date: Wednesday, January 06, 2021 | Sheet 25 of 45

eMMC 5.1

eMMC 5.1[U69]
32GB: 146900000N
64GB: 146900000K
128GB: 146900000H

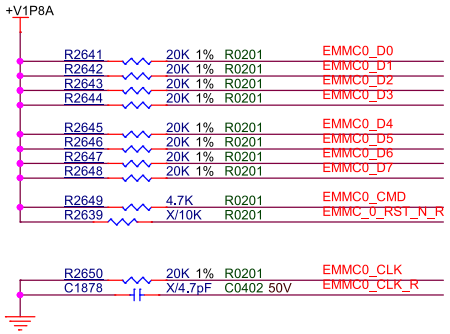

eMMC impedance 50ohm

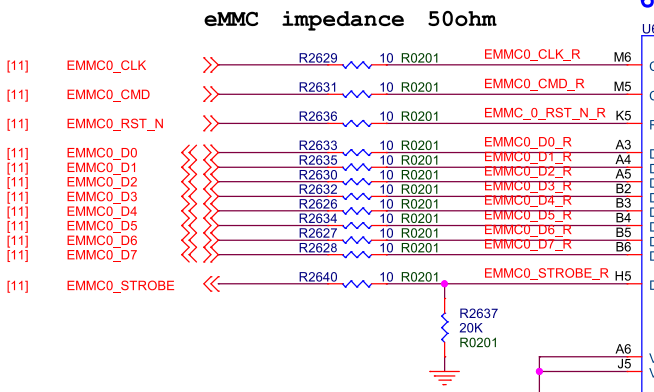

64GB[Default]

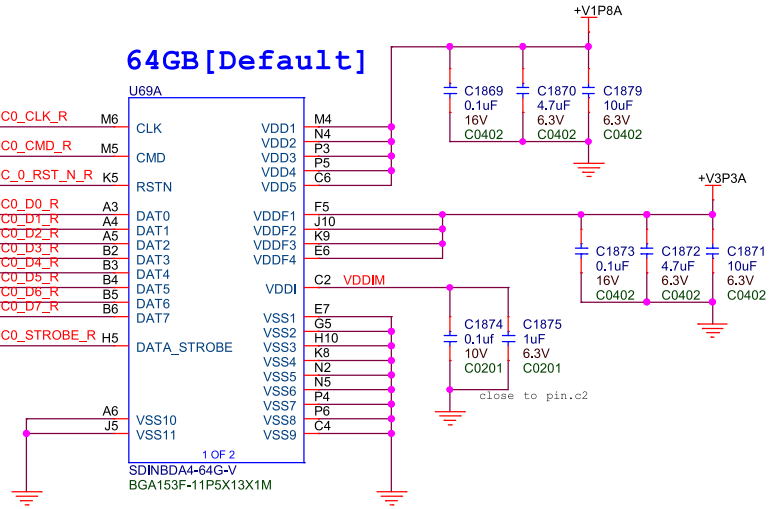

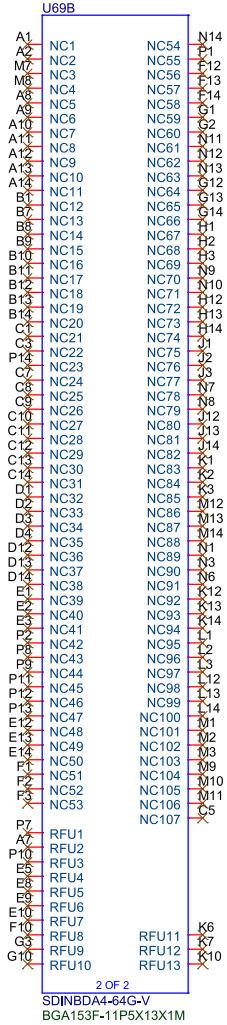

eMMC Topology

eMMC Routing Guidelines – Data Signal, Command and Clock / Strobe Signals

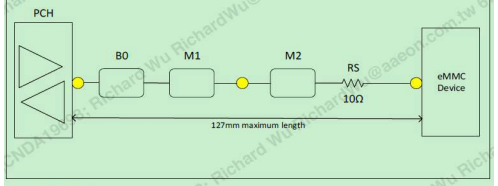

Layout Guidelines

Segment	T Line type	Reference	Via Count	Max length, mm	
				Segment	Total
B0	MS/SL/DSL	VSS	2	12.7	127
M1 or M2	SL/DSL	VSS		NA	

CNDA19598; Richard Wu RichardWu@aaeon.com.tw

<Variant Name>

AAEON Technology INC.			
Title: eMMC			
Size: B	Document Number: PICO-EHL4		Rev: A0.3_0_0
Date: Wednesday, January 06, 2021	Sheet 26 of 45		

SATA

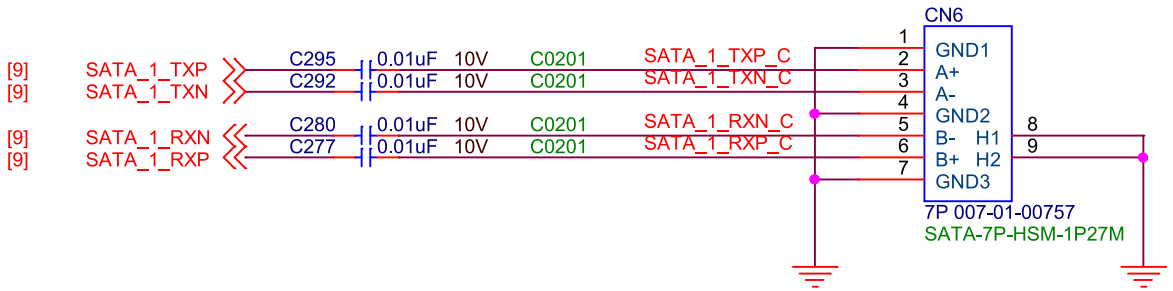

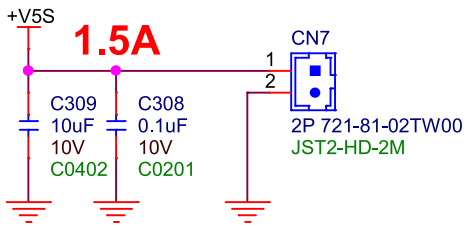

DIO

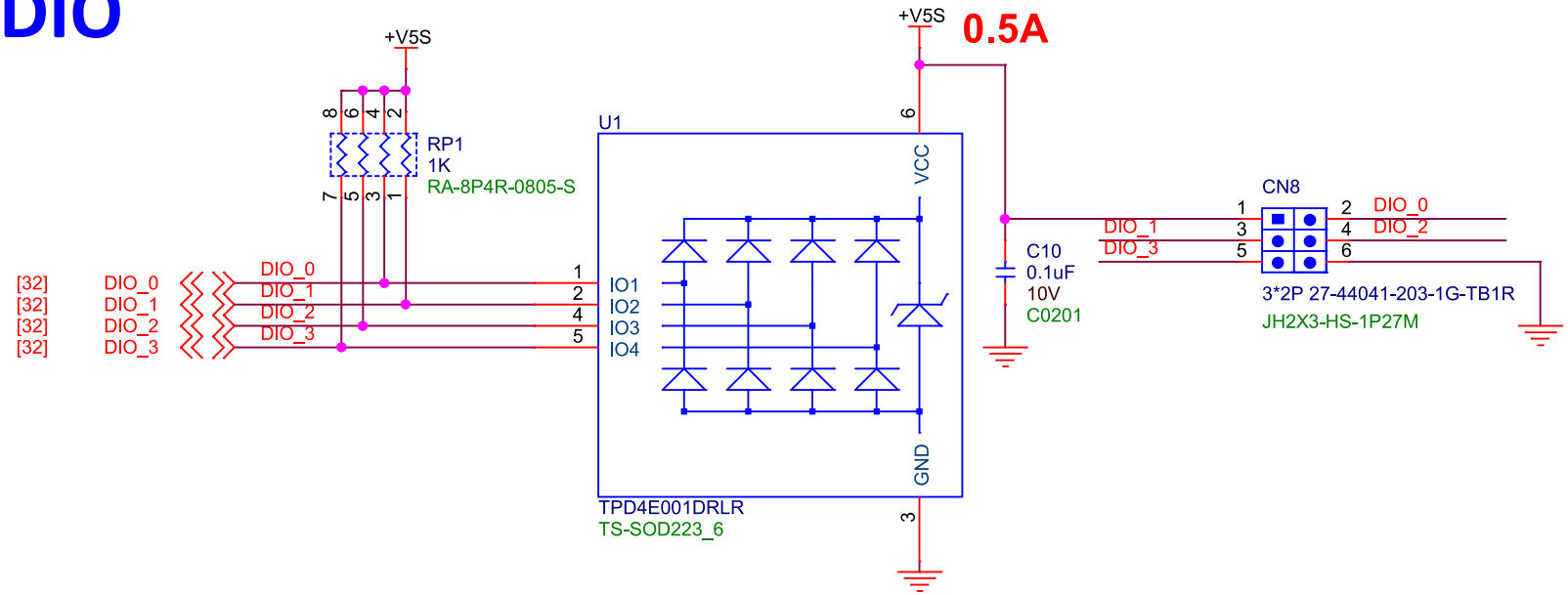

<Variant Name>

AAEON Technology INC.	
Title	SATA/DIO
Size A	Document Number PICO-EHL4
Rev	A0.3_0_0
Date: Wednesday, January 06, 2021	Sheet 27 of 45

USB

USB3.0 GEN2 *2(Rear I/O)

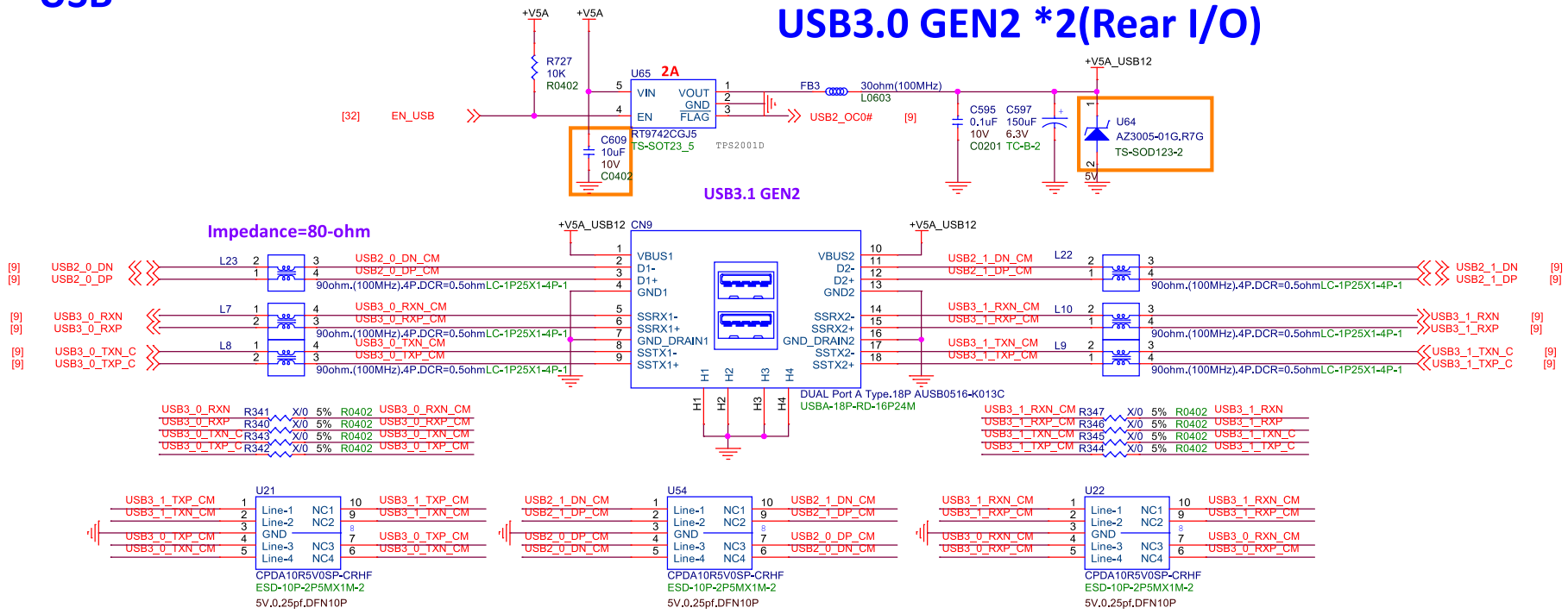

USB2.0 *2(Header)

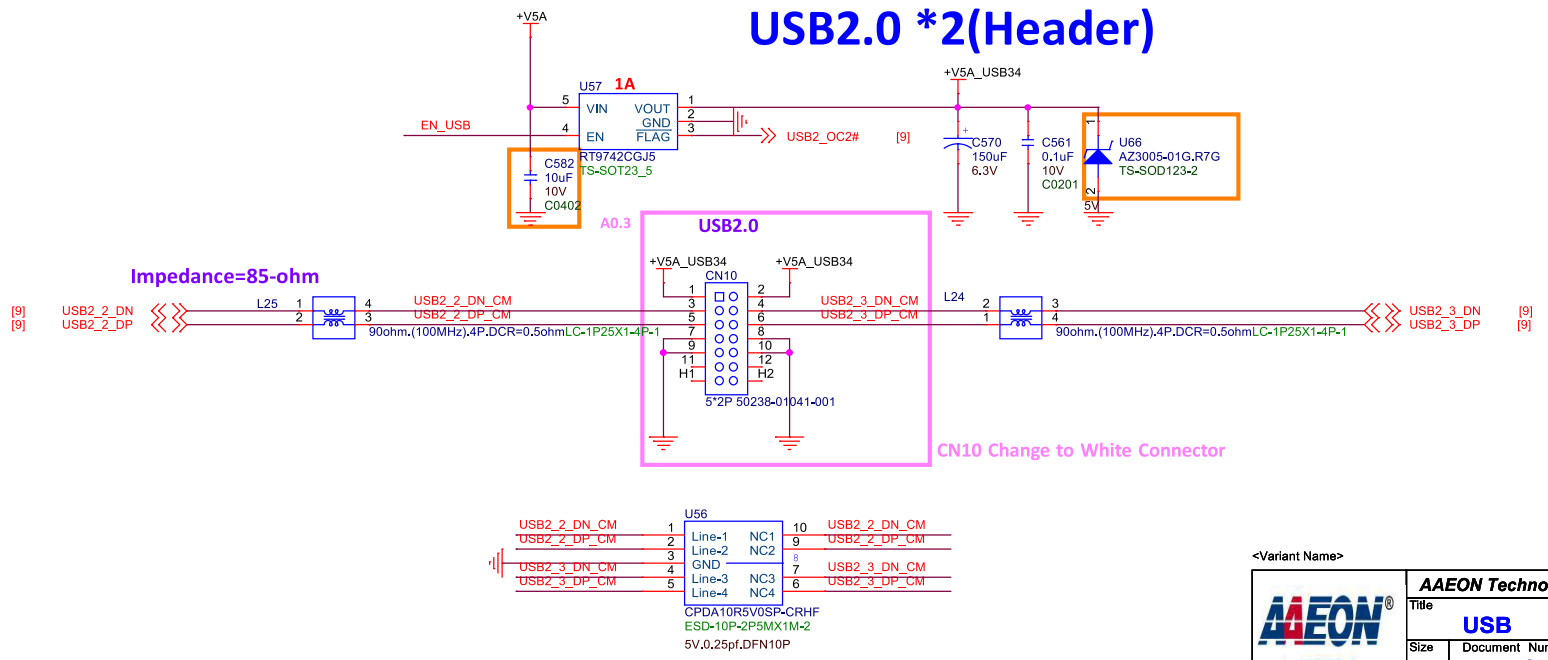

<Variant Name>

AAEON An ASUS Company	AAEON Technology INC.	
	Title: USB	
	Size: Custom	Document Number: PICO-EHL4	Rev: A0.3_0_0
	Date: Wednesday, January 06, 2021	Sheet 28 of 45

miniCard/mSATA(Full)

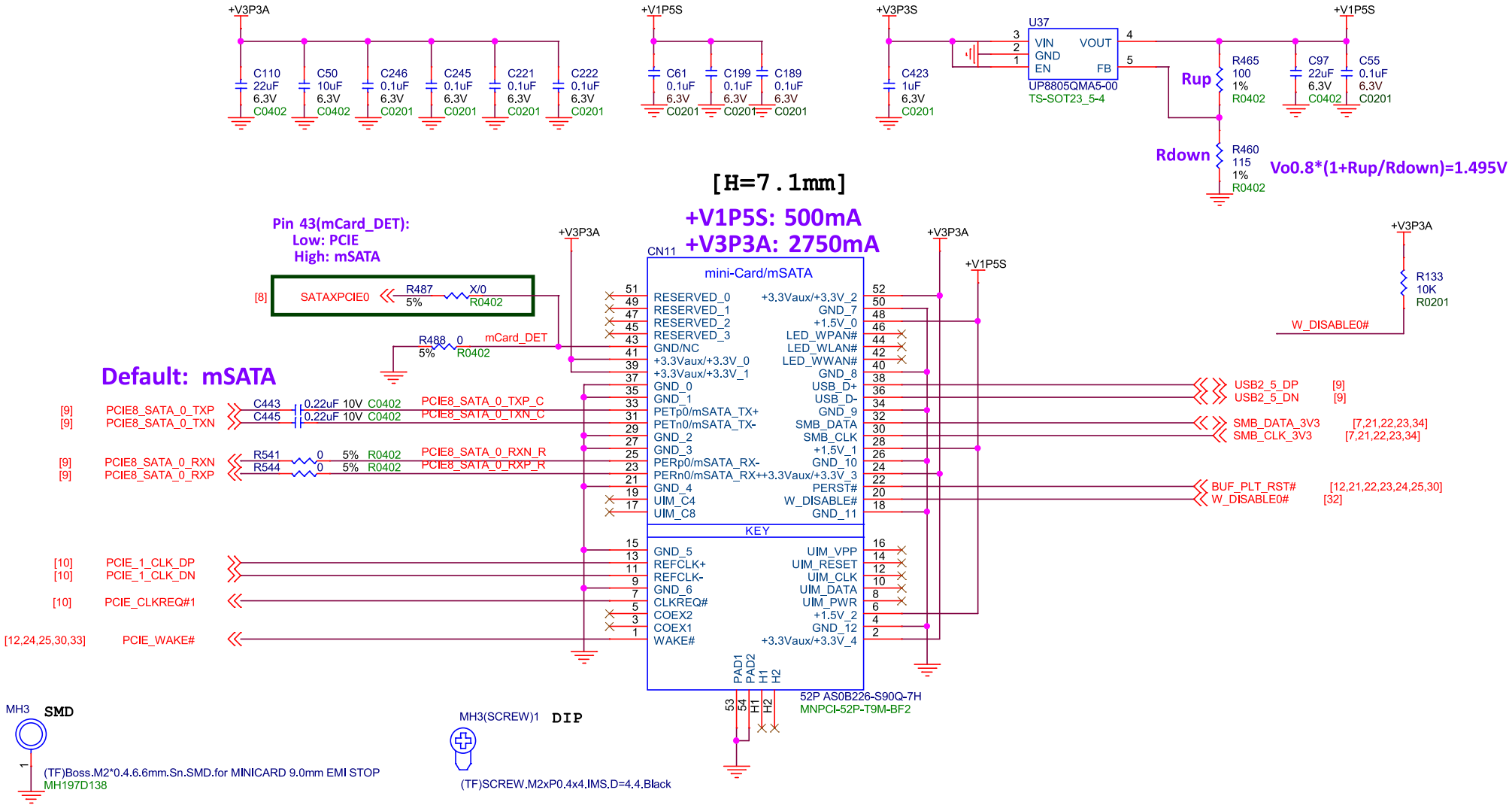

<Variant Name>

AAEON Technology INC.		
Title: miniCard/mSATA(Full)		
Size: Custom	Document Number: PICO-EHL4	Rev: A0.3_0_0
Date: Wednesday, January 06, 2021	Sheet 29 of 45	

M.2(Key E)

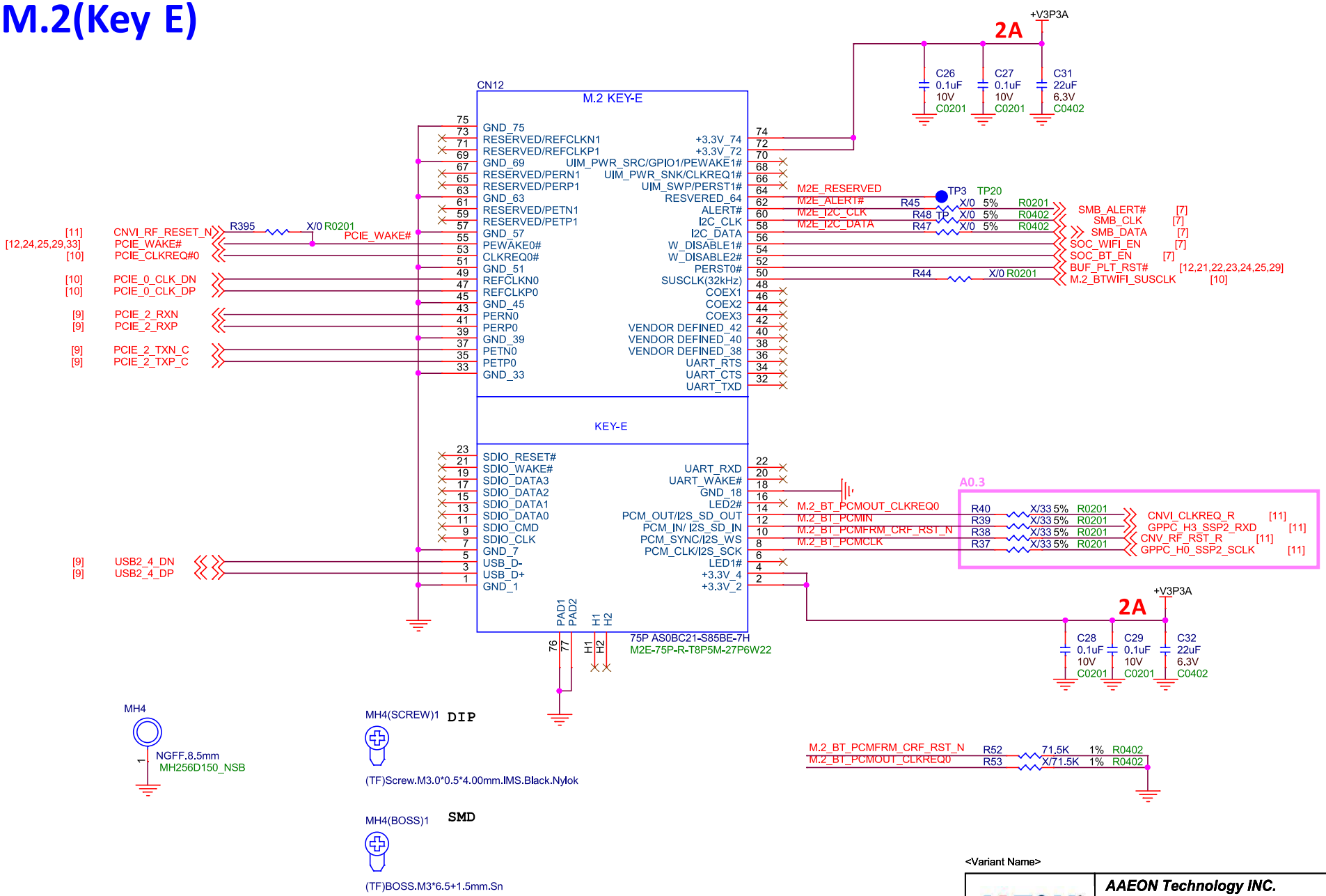

<Variant Name>

AAEON Technology INC.

An ASUS Company

Title: M.2(Key E)

Size: Custom | Document Number: PICO-EHL4 | Rev: A0.3_0_0

Date: Wednesday, January 06, 2021 | Sheet 30 of 45

CAN BUS

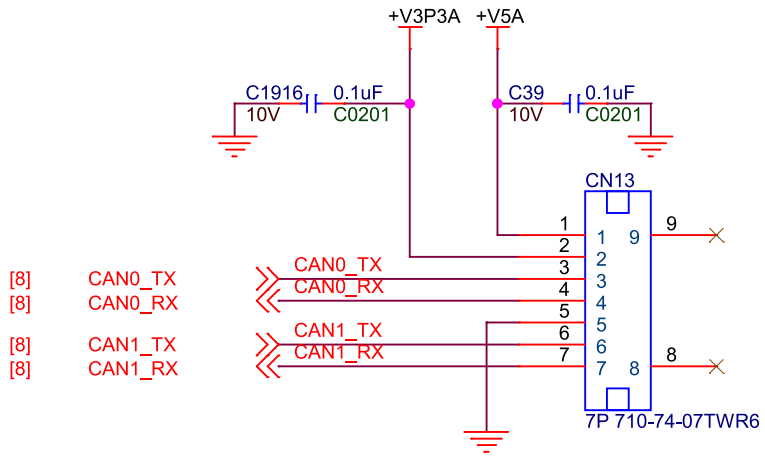

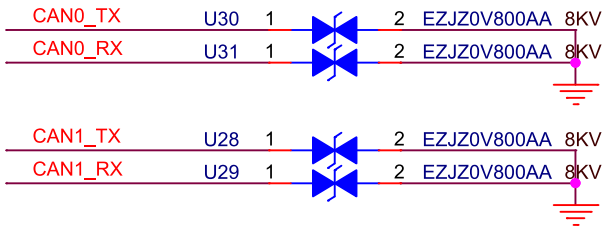

<Variant Name>

AAEON Technology INC.			
Title: CAN Bus			
Size: A	Document Number: PICO-EHL4		Rev: A0.3_0_0
Date: Wednesday, January 06, 2021		Sheet 31 of 45	

Super I/O F81966

PWROK: Power good signal of VCC, which is delayed 400ms (default) as VCC arrives at 2.8V.

RSMRST#: Device detects 5VSB power ok (4.4V) and VSB3V_IN become high, and after ~50 ms de-bounce time RSMRST will become high

Power On Strapping Options pin

Power Trip

	0(Low)	1(High)
TX_1#	80 PORT ENABLE	80 PORT DISABLE
RTS_1#	CONFIG 2E	CONFIG 4E
DTR_1#	FAN 100%	FAN 40%

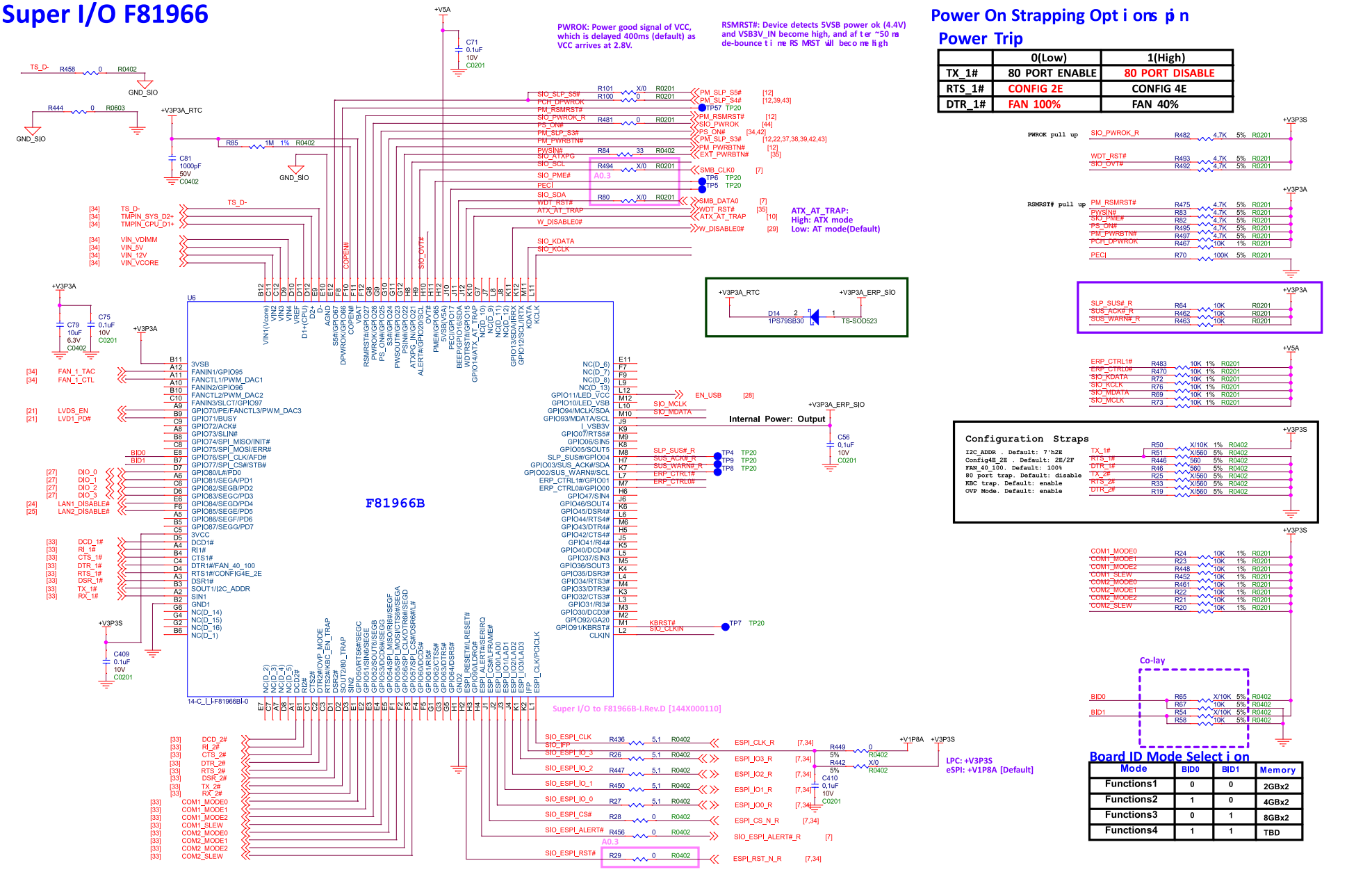

COM1-RS232/RS422/RS485

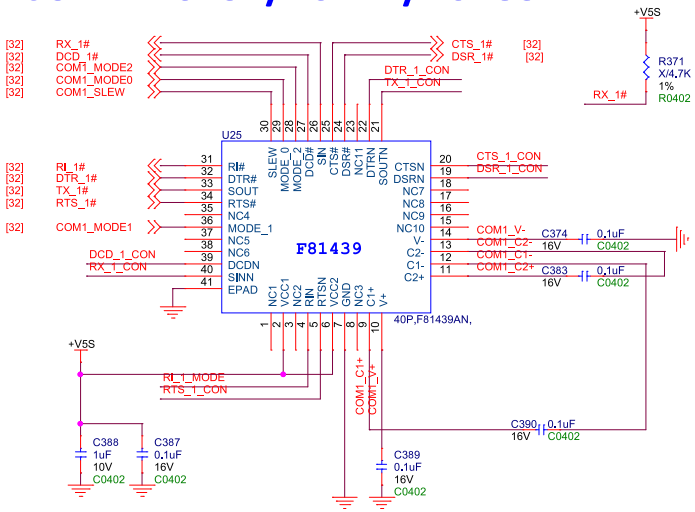

Change to F81439 for RS232/422/485
F81437 for RS232 only

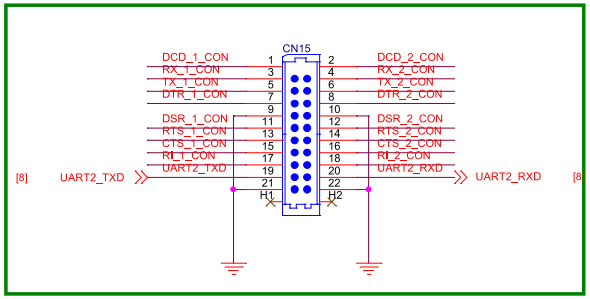

Maximum Data Rate

SLEW	RS233	RS422/RS485
1	250kbps	250kbps
0	1Mbps	10Mbps

Serial Port 1 Mode Select i on

Mode	MODE_0	MODE_1	MODE_2
RS-422	0	0	0
RS-232	0	0	1
RS-485 (Driver Half Duplex)	0	1	0
RS-485 (Receiver Half Duplex)	0	1	1
Shutdown MODE	1	X	X

Wake on Modem

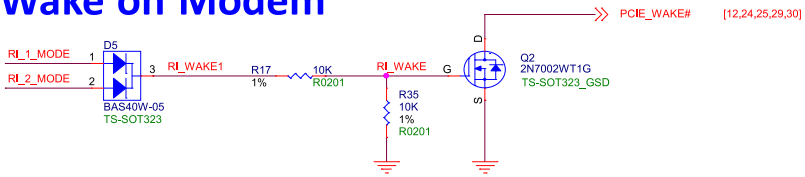

COM2-RS232/RS422/RS485

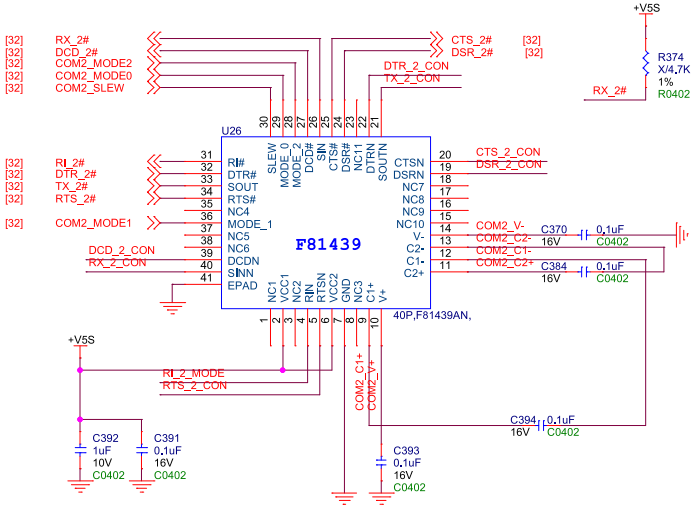

Maximum Data Rate

SLEW	RS233	RS422/RS485
1	250kbps	250kbps
0	1Mbps	10Mbps

Serial Port 1 Mode Select i on

Mode	MODE_0	MODE_1	MODE_2
RS-422	0	0	0
RS-232	0	0	1
RS-485 (Driver Half Duplex)	0	1	0
RS-485 (Receiver Half Duplex)	0	1	1
Shutdown MODE	1	X	X

<Variant Name>

AAEON Technology INC.

Title: COM Ports

Size: Custom | Document Number: PICO-EHL4 | Rev: A0.3_0_0

Date: Wednesday, January 06, 2021 | Sheet 33 of 45

BIOS

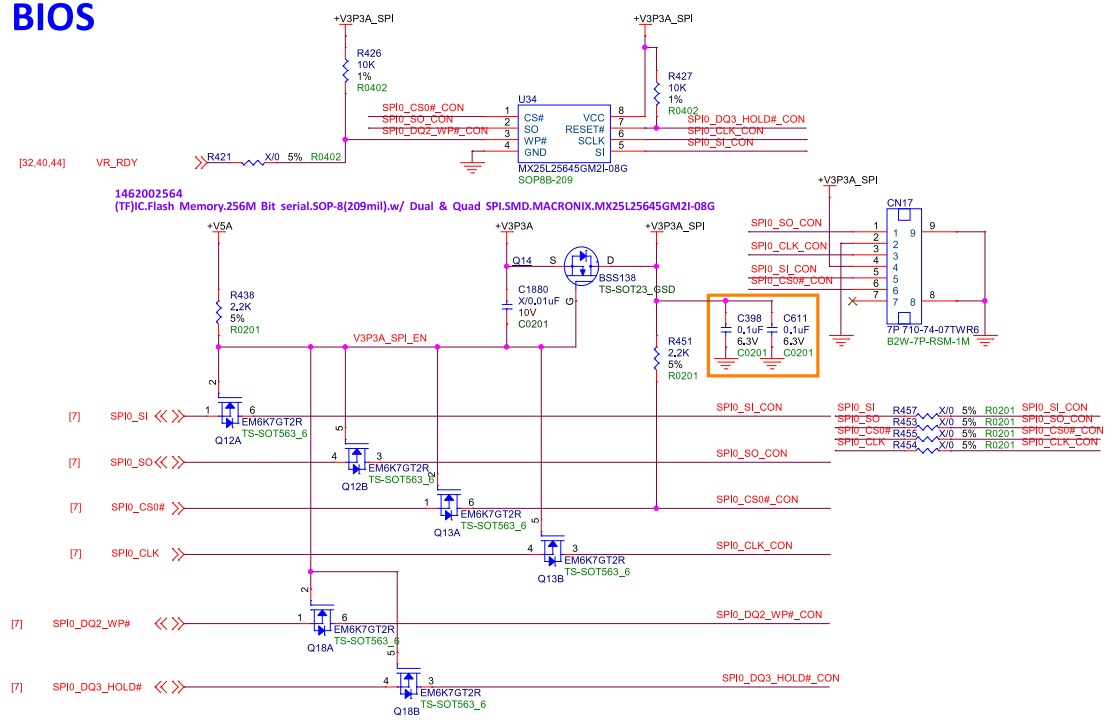

Temperature Monitor(CPU, SYS)

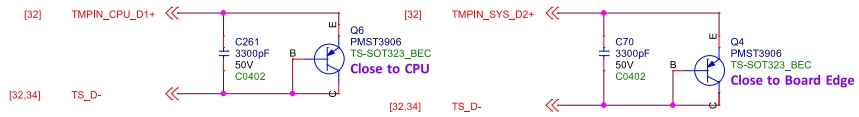

Voltage Monitor

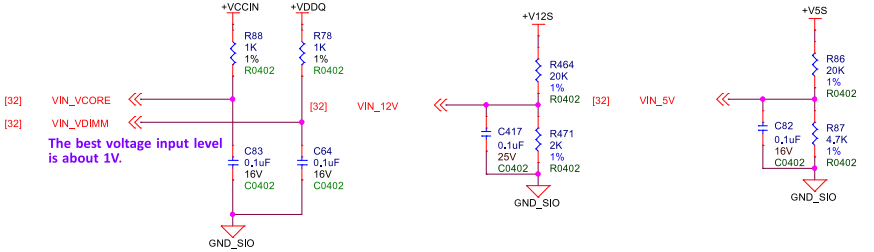

eSPI Connector (Debug Card) [I2C/SMBus]

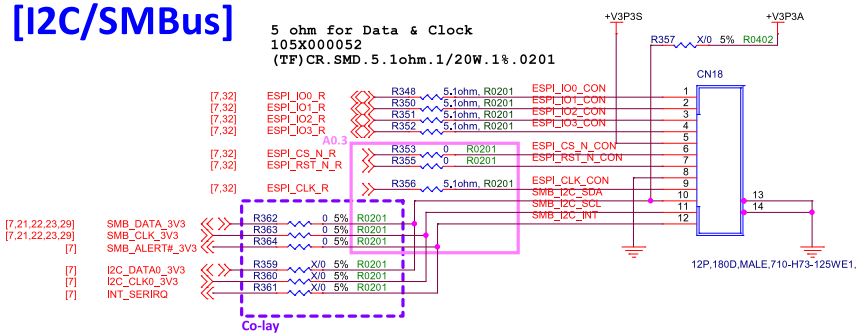

Discharge Circuit

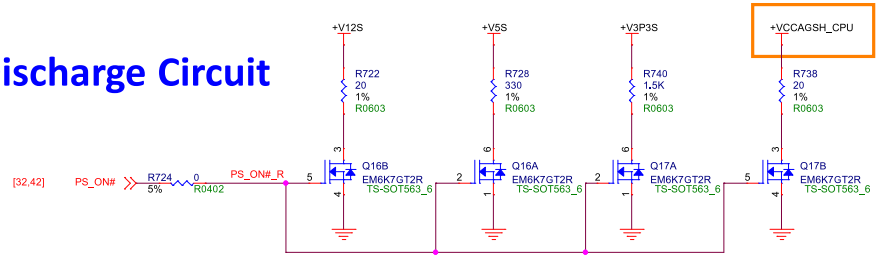

Smart FAN

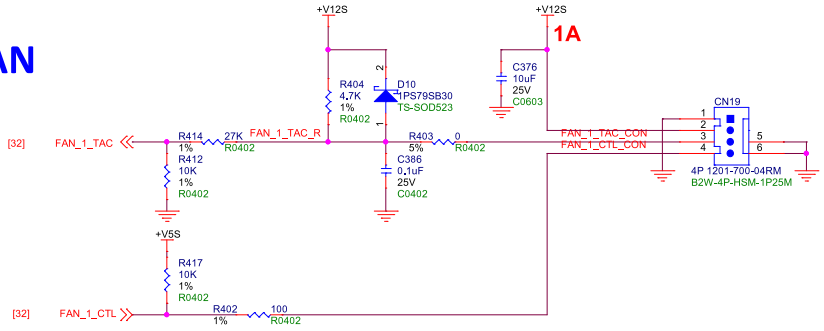

M2
material
(TF)PCB.PICO-EHL4.Rev.A0.3_0_0.Non-HDI.14L.Green.1*2.100x72x1.6mm

M3
material
(TF)BIOS Label.AMI.AMI-AptioTM DT(C)2006

<Variant Name>

AAEON® An ASUS Company	AAEON Technology INC.		
	Title: FAN/BIOS/HW Monitor/Debug		
	Size: Custom	Document Number: PICO-EHL4	Rev: A0.3_0_0
	Date: Wednesday, January 06, 2021	Sheet 34 of 45	