IMBM-H81C Rev 1.00

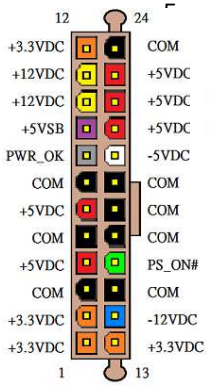

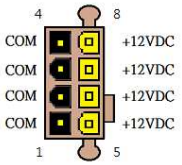

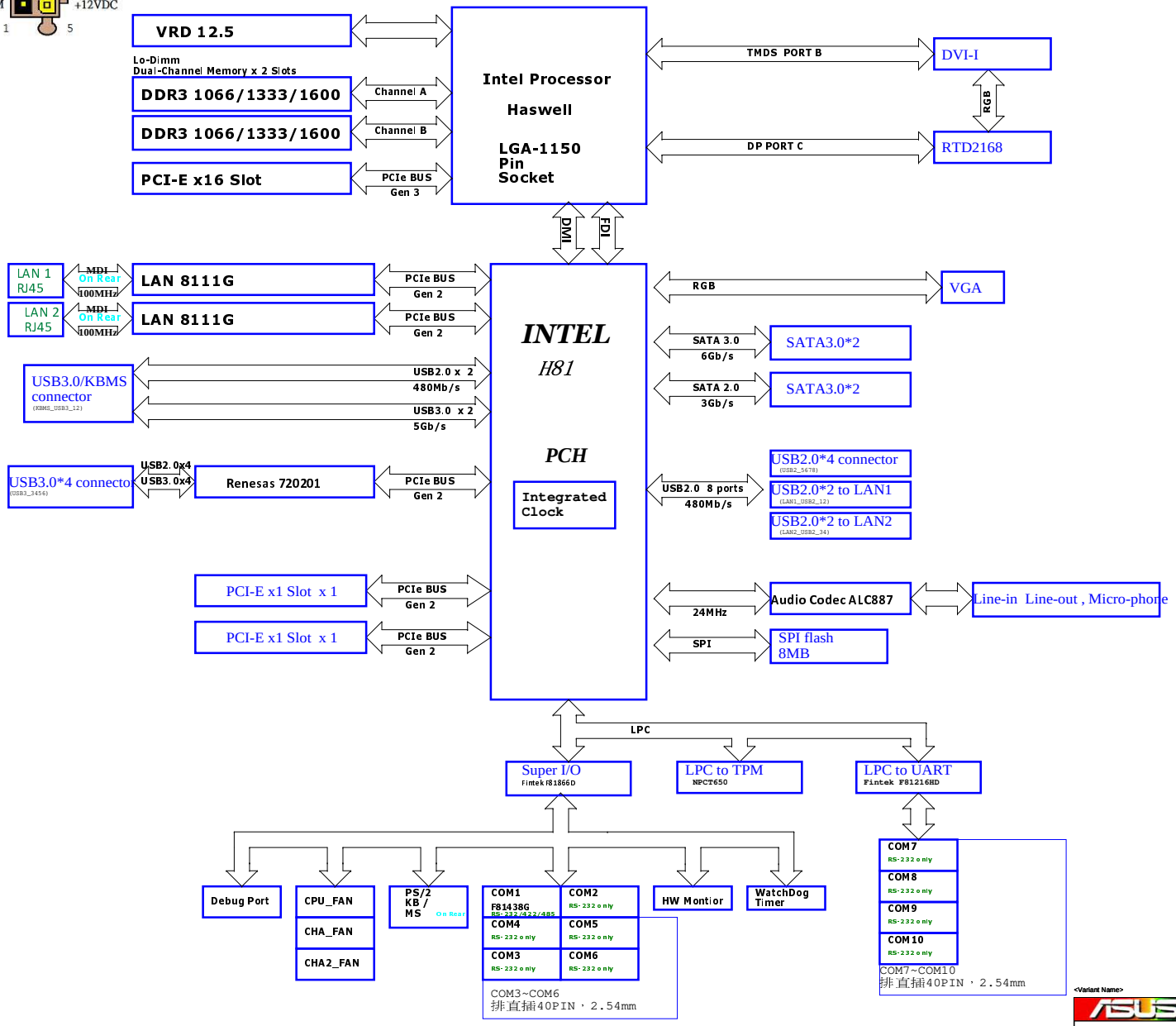

<Variant Name>

ASUSTeK COMPUTER INC.

Title : Block Diagram

Engineer: <OrgAddr1>

Size	Project Name	Rev
C	IMBM-H81C	1.00

Date: Tuesday, October 31, 2017 Sheet 1 of 78

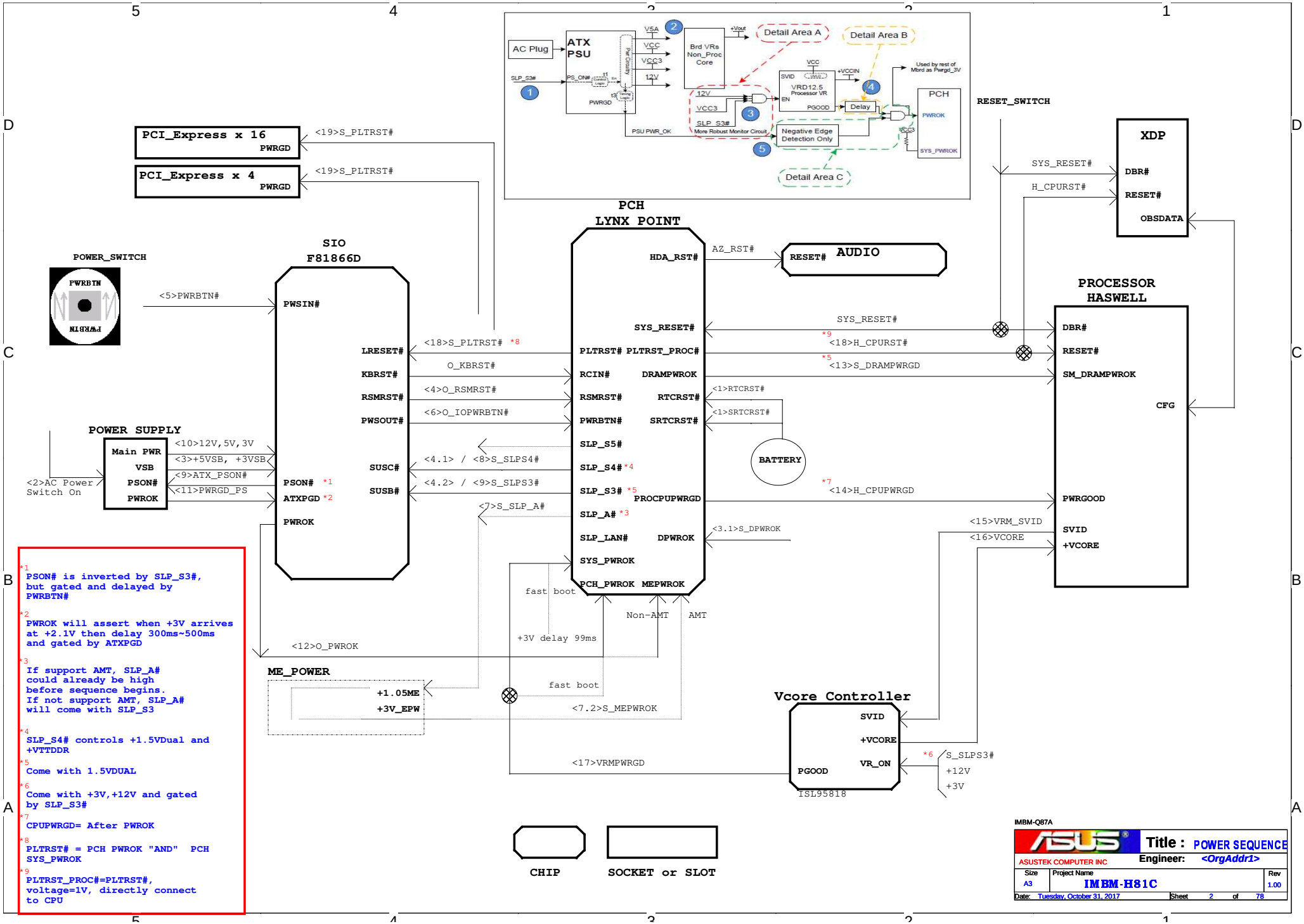
AC Plug
ATX PSU
SLP_S3#
PS_ON#
PWRGD
V5A
VCC
VCC3
12V
Brd VRs Non_Proc Core
+Vout
Detail Area A
Detail Area B
Detail Area C
VRD12.5 Processor VR
SVID
VCC
+VCCIN
EN
PGOOD
Delay
Used by rest of Mbrd as Pwrgd_3V
PCH
PWROK
SYS_PWROK
PSU PWR_OK
More Robust Monitor Circuit
Negative Edge Detection Only
PCI_Express x 16
PWRGD
PCI_Express x 4
PWRGD
<19>S_PLTRST#
<19>S_PLTRST#
RESET_SWITCH
XDP
SYS_RESET#
H_CPURST#
DBR#
RESET#
OBSDATA
POWER_SWITCH
PWRBTN
<5>PWRBTN#
SIO
F81866D
PWSIN#
LRESET#
KBRST#
RSMRST#
PWSOUT#
SUSC#
SUSB#
PSON# *1
ATXPGD *2
PWROK
<18>S_PLTRST# *8
O_KBRST#
<4>O_RSMRST#
<6>O_IOPWRBTN#
<4.1> / <8>S_SLPS4#
<4.2> / <9>S_SLPS3#
<7>S_SLP_A#
PCH
LYNX POINT
HDA_RST#
AZ_RST#
RESET#
AUDIO
SYS_RESET#
PLTRST# PLTRST_PROC#
RCIN# DRAMPWROK
RSMRST# RTCRST#
PWRBTN# SRTCRST#
SLP_S5#
SLP_S4# *4
SLP_S3# *5
PROCPUPWRGD
SLP_A# *3
SLP_LAN# DPWROK
SYS_PWROK
PCH_PWROK MEPWROK
<1>RTCRST#
<1>SRTCRST#
BATTERY
<3.1>S_DPWROK
fast boot
Non-AMT
AMT
+3V delay 99ms
<12>O_PWROK
POWER SUPPLY
Main PWR
VSB
PSON#
PWROK
<10>12V,5V,3V
<3>+5VSB, +3VSB
<9>ATX_PSON#
<11>PWRGD_PS
<2>AC Power Switch On
PROCESSOR
HASWELL
DBR#
RESET#
SM_DRAMPWROK
CFG
PWRGOOD
SVID
+VCORE
SYS_RESET#
*9
<18>H_CPURST#
*5
<13>S_DRAMPWRGD
*7
<14>H_CPUPWRGD
<15>VRM_SVID
<16>VCORE
ME_POWER
+1.05ME
+3V_EPW
fast boot
<7.2>S_MEPWROK
Vcore Controller
SVID
+VCORE
VR_ON
PGOOD
ISL95818
<17>VRMPWRGD
*6
S_SLPS3#
+12V
+3V
CHIP
SOCKET or SLOT
*1 PSON# is inverted by SLP_S3#, but gated and delayed by PWRBTN#
*2 PWROK will assert when +3V arrives at +2.1V then delay 300ms~500ms and gated by ATXPGD
*3 If support AMT, SLP_A# could already be high before sequence begins. If not support AMT, SLP_A# will come with SLP_S3
*4 SLP_S4# controls +1.5VDual and +VTTDDR
*5 Come with 1.5VDUAL
*6 Come with +3V,+12V and gated by SLP_S3#
*7 CPUPWRGD= After PWROK
*8 PLTRST# = PCH PWROK "AND" PCH SYS_PWROK
*9 PLTRST_PROC#=PLTRST#, voltage=1V, directly connect to CPU
IMBM-Q87A
ASUS
ASUSTEK COMPUTER INC
Title : POWER SEQUENCE
Engineer: <OrgAddr1>
Size A3
Project Name IMBM-H81C
Rev 1.00
Date: Tuesday, October 31, 2017
Sheet 2 of 78

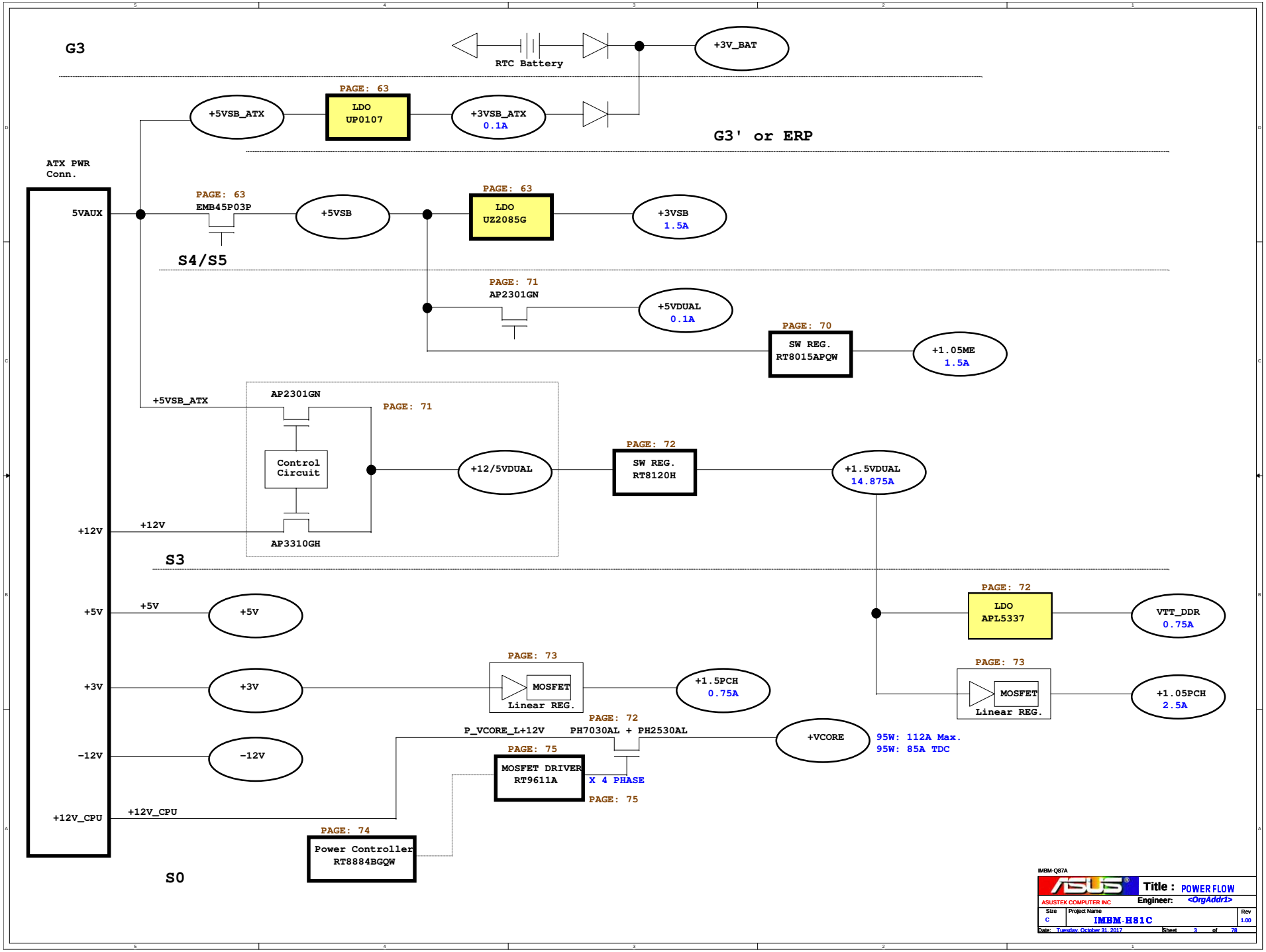

IMBM-Q87A

ASUSTEK COMPUTER INC

Title : POWER FLOW

Engineer: <OrgAddr1>

Size	Project Name	Rev
C	IMBM-H81C	1.00

Date: Tuesday, October 31, 2017 Sheet 3 of 78

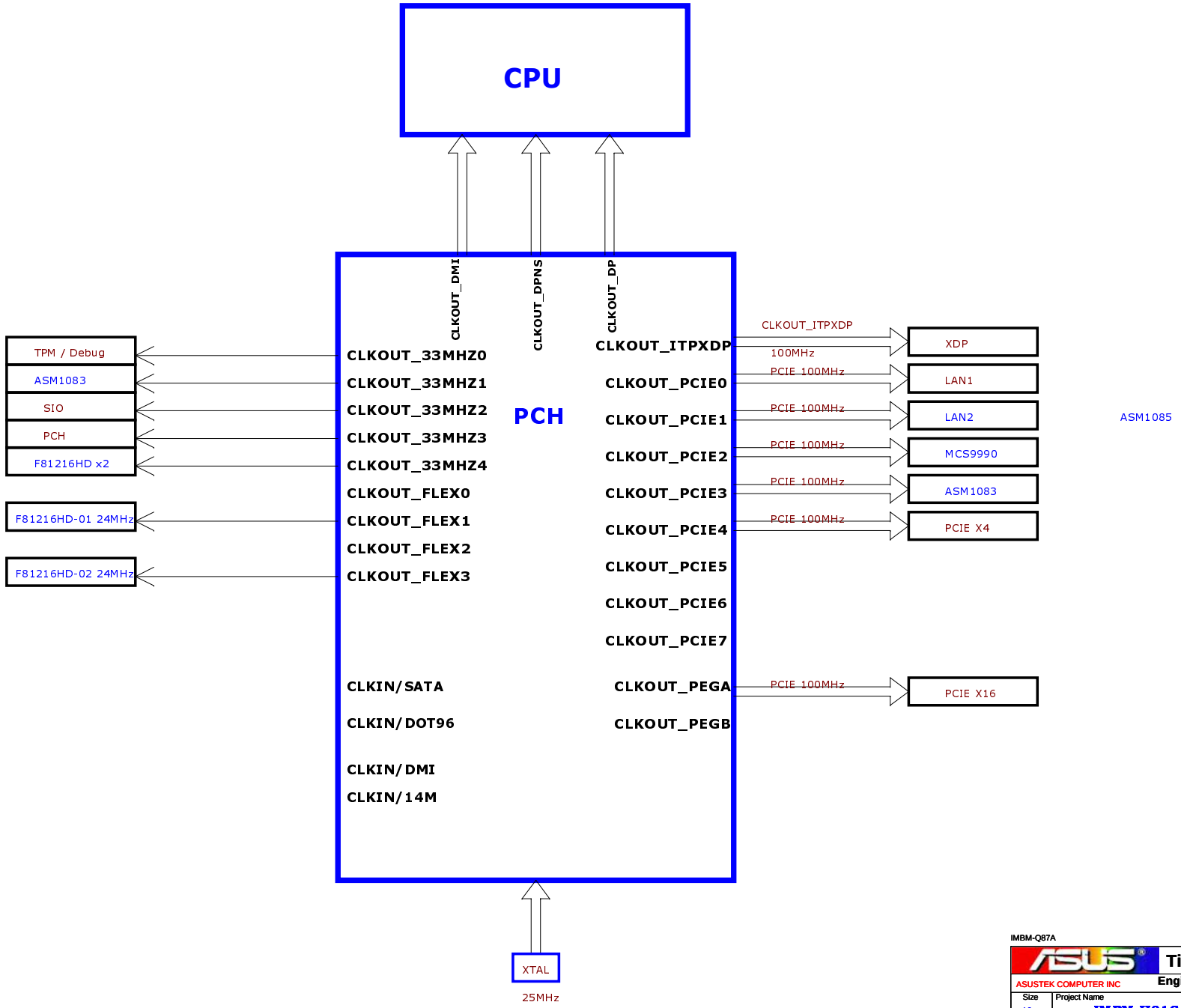

IMBM-Q87A

ASUSTEK COMPUTER INC	Title : CLK DISTRIBUTION	
	Engineer: <OrgAddr1>	
Size A3	Project Name IMBM-H81C	Rev 1.00
Date: Tuesday, October 31, 2017	Sheet 4 of 78	

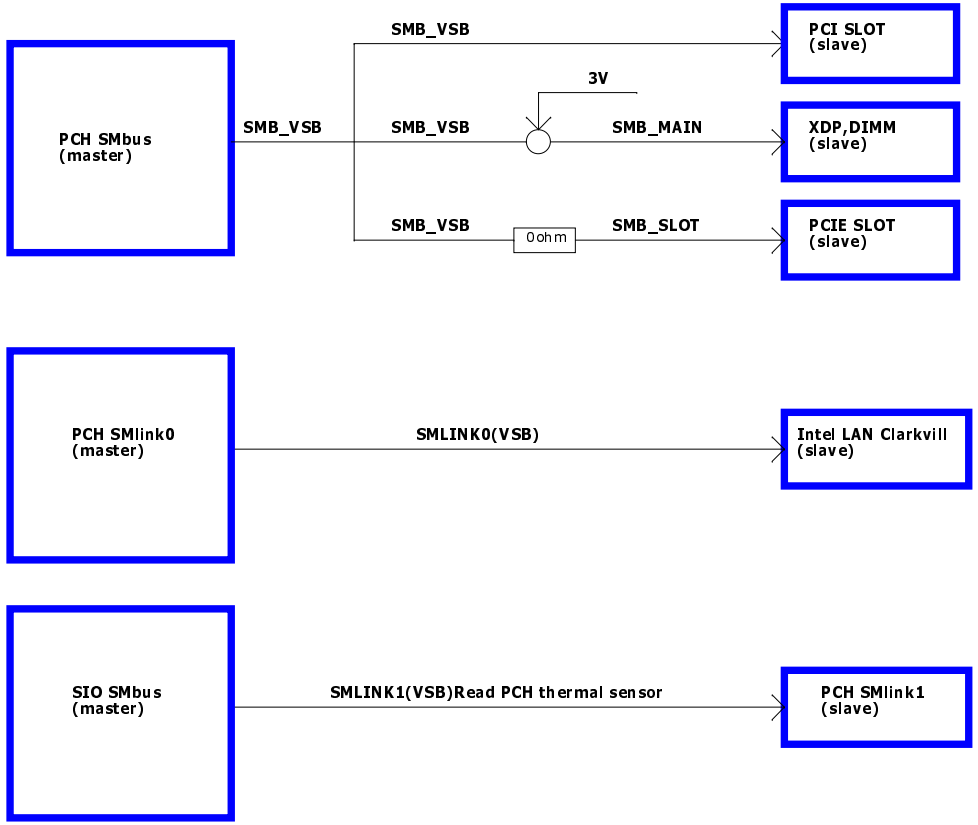

IMBM-Q87A

ASUSTEK COMPUTER INC	Title : SMBUS MAP	
	Engineer: <OrgAddr1>	
Size A3	Project Name IMBM-H81C	Rev 1.00
Date: Tuesday, October 31, 2017	Sheet 5 of 78	

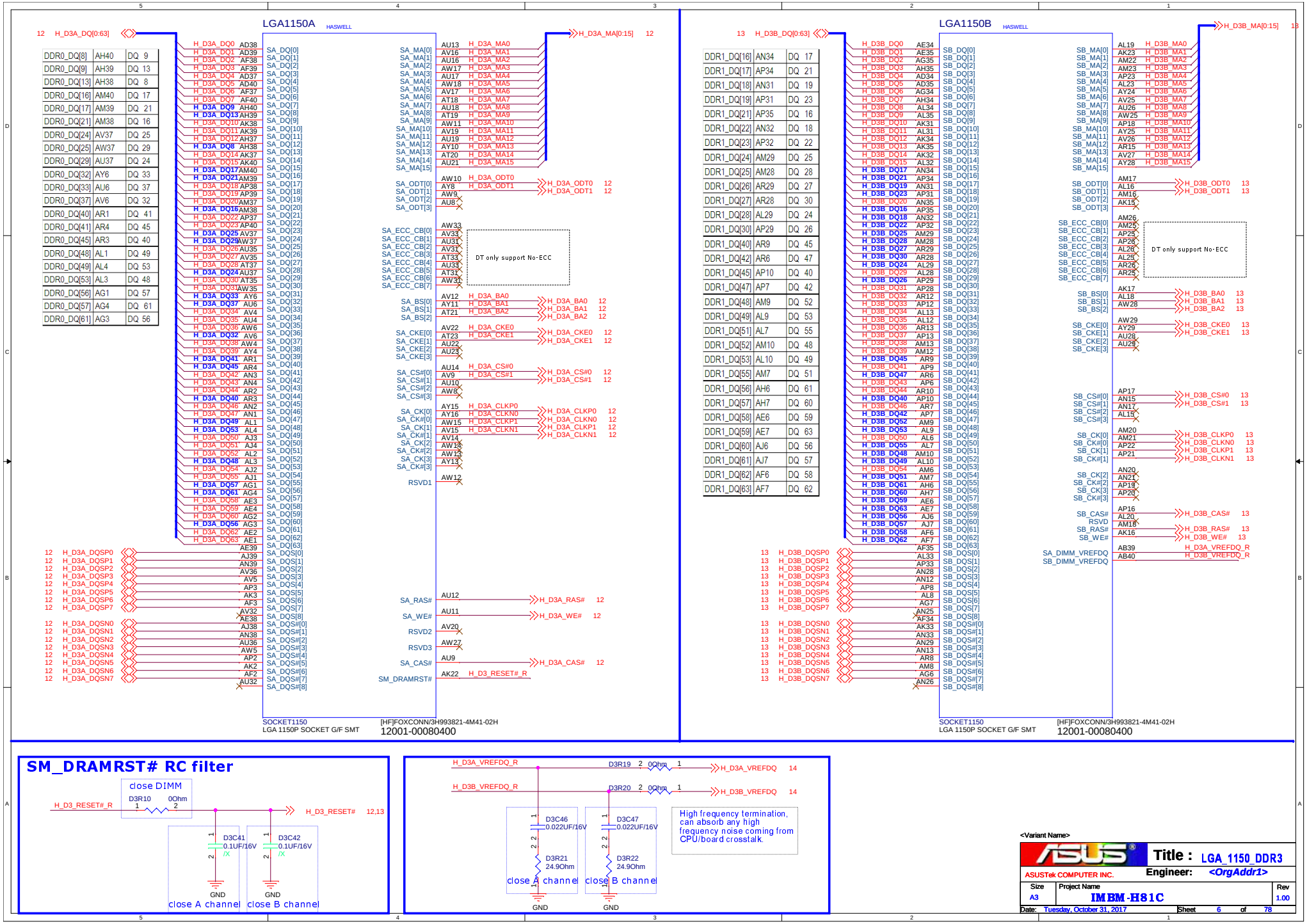
LGA1150A
HASWELL
12 H_D3A_DQ[0:63]
H_D3A_MA[0:15] 12
DDR0_DQ[8] AH40 DQ 9
DDR0_DQ[9] AH39 DQ 13
DDR0_DQ[13] AH38 DQ 8
DDR0_DQ[16] AM40 DQ 17
DDR0_DQ[17] AM39 DQ 21
DDR0_DQ[21] AM38 DQ 16
DDR0_DQ[24] AV37 DQ 25
DDR0_DQ[25] AW37 DQ 29
DDR0_DQ[29] AU37 DQ 24
DDR0_DQ[32] AY6 DQ 33
DDR0_DQ[33] AU6 DQ 37
DDR0_DQ[37] AV6 DQ 32
DDR0_DQ[40] AR1 DQ 41
DDR0_DQ[41] AR4 DQ 45
DDR0_DQ[45] AR3 DQ 40
DDR0_DQ[48] AL1 DQ 49
DDR0_DQ[49] AL4 DQ 53
DDR0_DQ[53] AL3 DQ 48
DDR0_DQ[56] AG1 DQ 57
DDR0_DQ[57] AG4 DQ 61
DDR0_DQ[61] AG3 DQ 56
H_D3A_ODT0 12
H_D3A_ODT1 12
DT only support No-ECC
H_D3A_BA0 12
H_D3A_BA1 12
H_D3A_BA2 12
H_D3A_CKE0 12
H_D3A_CKE1 12
H_D3A_CS#0 12
H_D3A_CS#1 12
H_D3A_CLKP0 12
H_D3A_CLKN0 12
H_D3A_CLKP1 12
H_D3A_CLKN1 12
H_D3A_RAS# 12
H_D3A_WE# 12
H_D3A_CAS# 12
H_D3_RESET#_R
SOCKET1150
LGA 1150P SOCKET G/F SMT
[HF]FOXCONN/3H993821-4M41-02H
12001-00080400
LGA1150B
HASWELL
13 H_D3B_DQ[0:63]
H_D3B_MA[0:15] 13
DDR1_DQ[16] AN34 DQ 17
DDR1_DQ[17] AP34 DQ 21
DDR1_DQ[18] AN31 DQ 19
DDR1_DQ[19] AP31 DQ 23
DDR1_DQ[21] AP35 DQ 16
DDR1_DQ[22] AN32 DQ 18
DDR1_DQ[23] AP32 DQ 22
DDR1_DQ[24] AM29 DQ 25
DDR1_DQ[25] AM28 DQ 28
DDR1_DQ[26] AR29 DQ 27
DDR1_DQ[27] AR28 DQ 30
DDR1_DQ[28] AL29 DQ 24
DDR1_DQ[30] AP29 DQ 26
DDR1_DQ[40] AR9 DQ 45
DDR1_DQ[42] AR6 DQ 47
DDR1_DQ[45] AP10 DQ 40
DDR1_DQ[47] AP7 DQ 42
DDR1_DQ[48] AM9 DQ 52
DDR1_DQ[49] AL9 DQ 53
DDR1_DQ[51] AL7 DQ 55
DDR1_DQ[52] AM10 DQ 48
DDR1_DQ[53] AL10 DQ 49
DDR1_DQ[55] AM7 DQ 51
DDR1_DQ[56] AH6 DQ 61
DDR1_DQ[57] AH7 DQ 60
DDR1_DQ[58] AE6 DQ 59
DDR1_DQ[59] AE7 DQ 63
DDR1_DQ[60] AJ6 DQ 56
DDR1_DQ[61] AJ7 DQ 57
DDR1_DQ[62] AF6 DQ 58
DDR1_DQ[63] AF7 DQ 62
H_D3B_ODT0 13
H_D3B_ODT1 13
DT only support No-ECC
H_D3B_BA0 13
H_D3B_BA1 13
H_D3B_BA2 13
H_D3B_CKE0 13
H_D3B_CKE1 13
H_D3B_CS#0 13
H_D3B_CS#1 13
H_D3B_CLKP0 13
H_D3B_CLKN0 13
H_D3B_CLKP1 13
H_D3B_CLKN1 13
H_D3B_CAS# 13
H_D3B_RAS# 13
H_D3B_WE# 13
H_D3A_VREFDQ_R
H_D3B_VREFDQ_R
SOCKET1150
LGA 1150P SOCKET G/F SMT
[HF]FOXCONN/3H993821-4M41-02H
12001-00080400
SM_DRAMRST# RC filter
close DIMM
D3R10 0Ohm
H_D3_RESET# 12,13
D3C41 0.1UF/16V
D3C42 0.1UF/16V
GND
close A channel
close B channel
D3R19 0Ohm
D3R20 0Ohm
H_D3A_VREFDQ 14
H_D3B_VREFDQ 14
D3C46 0.022UF/16V
D3C47 0.022UF/16V
D3R21 24.9Ohm
D3R22 24.9Ohm
High frequency termination, can absorb any high frequency noise coming from CPU/board crosstalk.
<Variant Name>
Title : LGA_1150_DDR3
ASUSTek COMPUTER INC.
Engineer: <OrgAddr1>
Size A3
Project Name IMBM-H81C
Rev 1.00
Date: Tuesday, October 31, 2017
Sheet 6 of 78

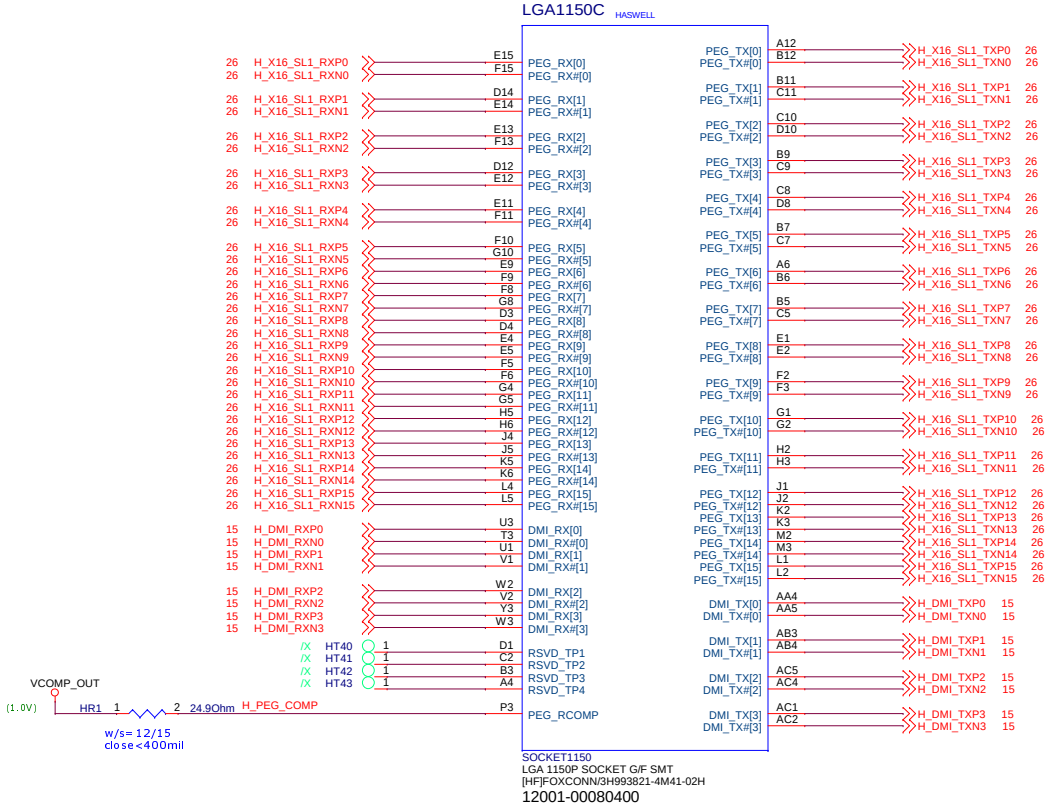

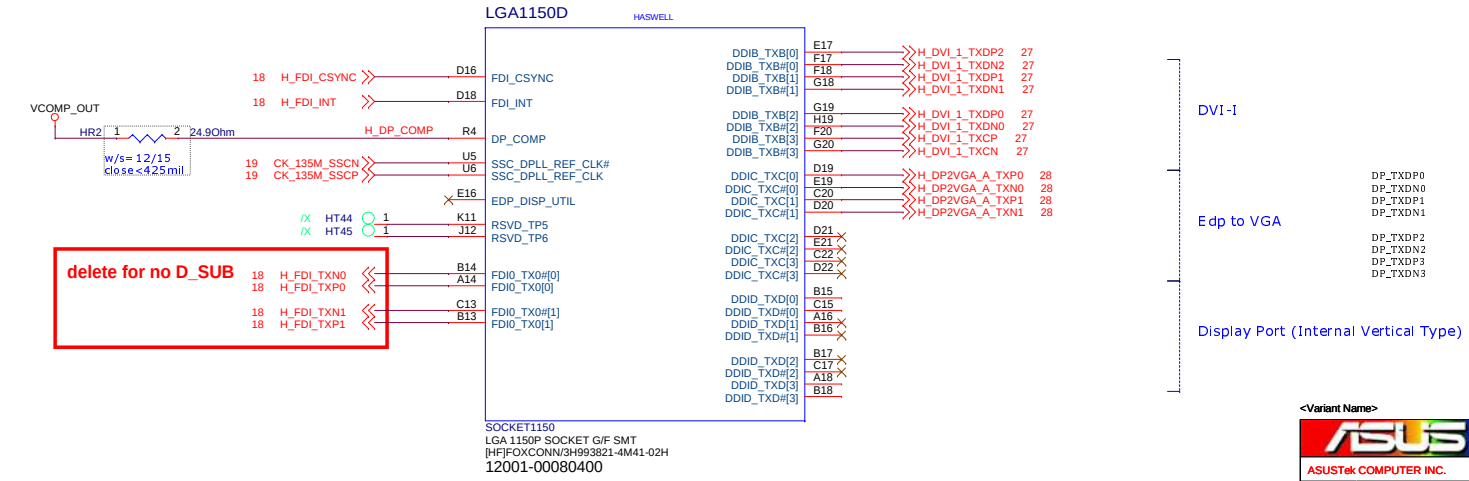

<Variant Name>

ASUSTek COMPUTER INC.	Title : LGA1150_PEG_DMI_FDI_DDI	
	Engineer: <OrgAddr1>	
Size: A3	Project Name: IMBM-H81C	Rev: 1.00
Date: Tuesday, October 31, 2017	Sheet 7 of 78	

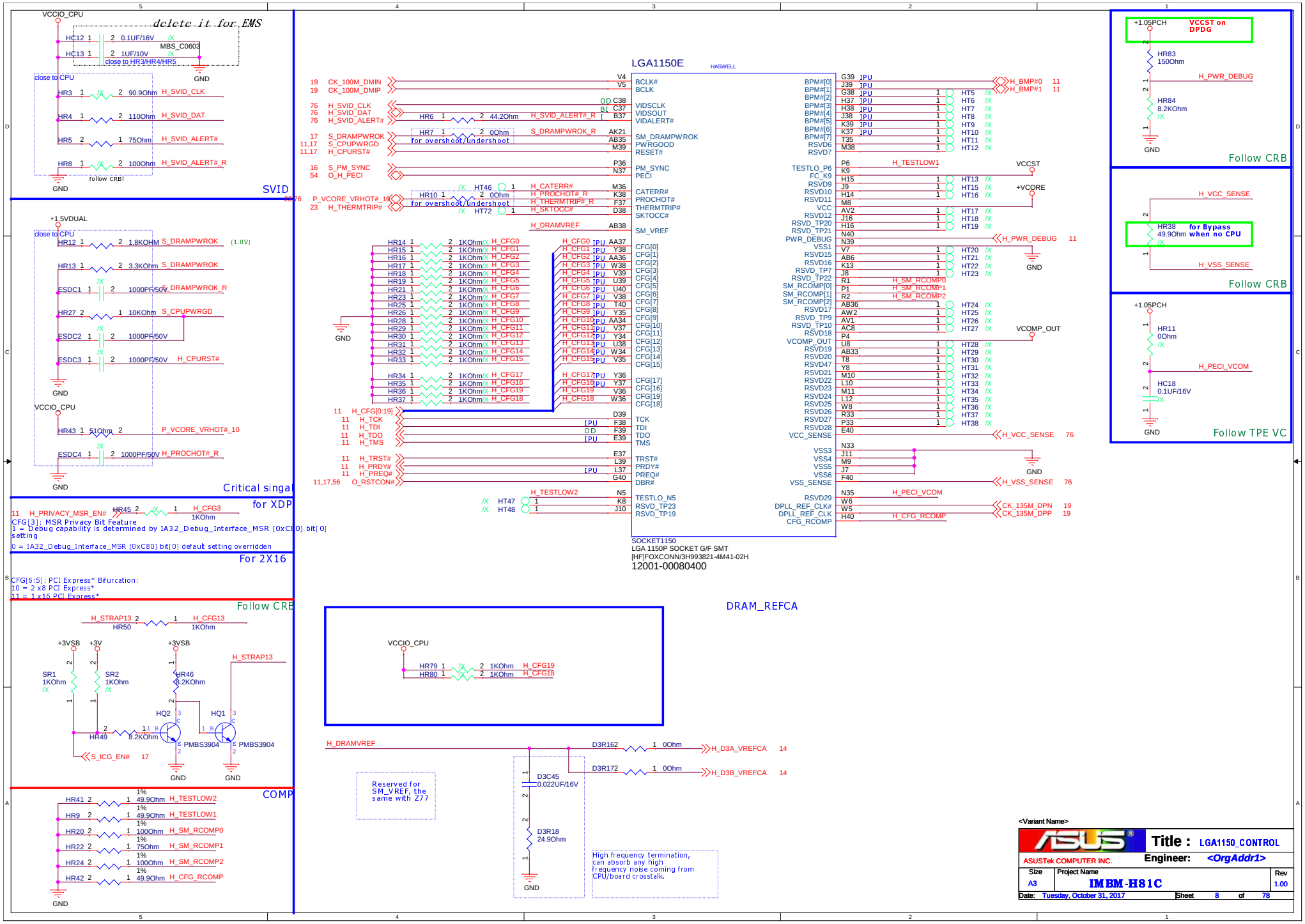
delete it for EMS
VCCIO_CPU
HC12 0.1UF/16V
HC13 1UF/10V
MBS_C0603
close to HR3/HR4/HR5
close to CPU
HR3 90.9Ohm H_SVID_CLK
HR4 110Ohm H_SVID_DAT
HR5 75Ohm H_SVID_ALERT#
HR8 100Ohm H_SVID_ALERT#_R
follow CRB!
GND
SVID
+1.5VDUAL
HR12 1.8KOHM S_DRAMPWROK (1.0V)
HR13 3.3KOhm S_DRAMPWROK
ESDC1 1000PF/50V S_DRAMPWROK_R
HR27 10KOhm S_CPUPWRGD
ESDC2 1000PF/50V
ESDC3 1000PF/50V H_CPURST#
HR43 51Ohm P_VCORE_VRHOT#_10
ESDC4 1000PF/50V H_PROCHOT#_R
Critical singal
for XDP
H_PRIVACY_MSR_EN# HR45 H_CFG3 1KOhm
CFG[3]: MSR Privacy Bit Feature
1 = Debug capability is determined by IA32_Debug_Interface_MSR (0xC80) bit[0] setting
0 = IA32_Debug_Interface_MSR (0xC80) bit[0] default setting overridden
For 2X16
CFG[6:5]: PCI Express* Bifurcation:
10 = 2 x8 PCI Express*
11 = 1 x16 PCI Express*
Follow CRB
H_STRAP13 HR50 H_CFG13 1KOhm
+3VSB +3V +3VSB
SR1 1KOhm
SR2 1KOhm
HR46 8.2KOhm
H_STRAP13
HQ2 HQ1
HR49 8.2KOhm
PMBS3904 PMBS3904
S_ICG_EN# 17
GND
COMP
HR41 49.9Ohm H_TESTLOW2
HR9 49.9Ohm H_TESTLOW1
HR20 100Ohm H_SM_RCOMP0
HR22 75Ohm H_SM_RCOMP1
HR24 100Ohm H_SM_RCOMP2
HR42 49.9Ohm H_CFG_RCOMP
LGA1150E
HASWELL
19 CK_100M_DMIN
19 CK_100M_DMIP
76 H_SVID_CLK
76 H_SVID_DAT
76 H_SVID_ALERT#
HR6 44.2Ohm H_SVID_ALERT#_R
17 S_DRAMPWROK
11,17 S_CPUPWRGD
11,17 H_CPURST#
HR7 0Ohm S_DRAMPWROK_R
for overshoot/undershoot
16 S_PM_SYNC
54 O_H_PECI
HT46 H_CATERR#
HR10 0Ohm H_PROCHOT#_R
for overshoot/undershoot H_THERMTRIP#_R
23 H_THERMTRIP# HT72 H_SKTOCC#
H_DRAMVREF
HR14 1KOhm H_CFG0
HR15 1KOhm H_CFG1
HR16 1KOhm H_CFG2
HR17 1KOhm H_CFG3
HR18 1KOhm H_CFG4
HR19 1KOhm H_CFG5
HR21 1KOhm H_CFG6
HR23 1KOhm H_CFG7
HR25 1KOhm H_CFG8
HR26 1KOhm H_CFG9
HR28 1KOhm H_CFG10
HR29 1KOhm H_CFG11
HR30 1KOhm H_CFG12
HR31 1KOhm H_CFG13
HR32 1KOhm H_CFG14
HR33 1KOhm H_CFG15
HR34 1KOhm H_CFG17
HR35 1KOhm H_CFG16
HR36 1KOhm H_CFG19
HR37 1KOhm H_CFG18
11 H_CFG[0:19]
11 H_TCK
11 H_TDI
11 H_TDO
11 H_TMS
11 H_TRST#
11 H_PRDY#
11 H_PREQ#
11,17,56 O_RSTCON#
H_TESTLOW2
HT47 HT48
BCLK# BCLK
VIDSCLK VIDSOUT VIDALERT#
SM_DRAMPWROK PWRGOOD RESET#
PM_SYNC PECI
CATERR# PROCHOT# THERMTRIP# SKTOCC#
SM_VREF
CFG[0] CFG[1] CFG[2] CFG[3] CFG[4] CFG[5] CFG[6] CFG[7] CFG[8] CFG[9] CFG[10] CFG[11] CFG[12] CFG[13] CFG[14] CFG[15]
CFG[17] CFG[16] CFG[19] CFG[18]
TCK TDI TDO TMS
TRST# PRDY# PREQ# DBR#
TESTLO_N5 RSVD_TP23 RSVD_TP19
BPM#[0] BPM#[1] BPM#[2] BPM#[3] BPM#[4] BPM#[5] BPM#[6] BPM#[7] RSVD6 RSVD7
TESTLO_P6 FC_K9 RSVD9 RSVD10 RSVD11 VCC RSVD12 RSVD_TP20 RSVD_TP21 PWR_DEBUG VSS1 RSVD15 RSVD16 RSVD_TP7 RSVD_TP22 SM_RCOMP[0] SM_RCOMP[1] SM_RCOMP[2] RSVD17 RSVD_TP9 RSVD_TP10 RSVD18 VCOMP_OUT RSVD19 RSVD20 RSVD47 RSVD21 RSVD22 RSVD23 RSVD24 RSVD25 RSVD26 RSVD27 RSVD28 VCC_SENSE
VSS3 VSS4 VSS5 VSS6 VSS_SENSE
RSVD29 DPLL_REF_CLK# DPLL_REF_CLK CFG_RCOMP
H_BMP#0 11
H_BMP#1 11
H_TESTLOW1
VCCST
+VCORE
H_PWR_DEBUG 11
H_SM_RCOMP0
H_SM_RCOMP1
H_SM_RCOMP2
VCOMP_OUT
H_VCC_SENSE 76
H_VSS_SENSE 76
H_PECI_VCOM
CK_135M_DPN 19
CK_135M_DPP 19
H_CFG_RCOMP
SOCKET1150
LGA 1150P SOCKET G/F SMT
[HF]FOXCONN/3H993821-4M41-02H
12001-00080400
DRAM_REFCA
VCCIO_CPU
HR79 1KOhm H_CFG19
HR80 1KOhm H_CFG18
H_DRAMVREF
D3R162 0Ohm H_D3A_VREFCA 14
D3R172 0Ohm H_D3B_VREFCA 14
Reserved for SM_VREF, the same with Z77
D3C45 0.022UF/16V
D3R18 24.9Ohm
High frequency termination, can absorb any high frequency noise coming from CPU/board crosstalk.
+1.05PCH
VCCST on DPDG
HR83 150Ohm
H_PWR_DEBUG
HR84 8.2KOhm
Follow CRB
H_VCC_SENSE
HR38 49.9Ohm for Bypass when no CPU
H_VSS_SENSE
Follow CRB
+1.05PCH
HR11 0Ohm
H_PECI_VCOM
HC18 0.1UF/16V
Follow TPE VC
<Variant Name>
Title : LGA1150_CONTROL
ASUSTek COMPUTER INC.
Engineer: <OrgAddr1>
Size A3
Project Name IMBM-H81C
Rev 1.00
Date: Tuesday, October 31, 2017
Sheet 8 of 78

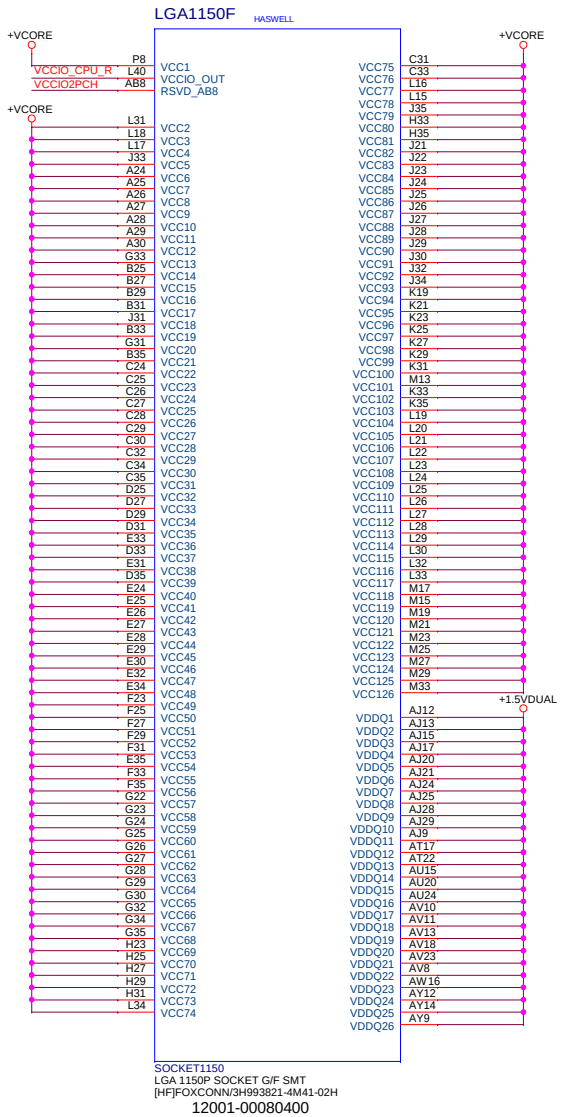

Follow CRB

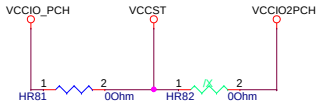

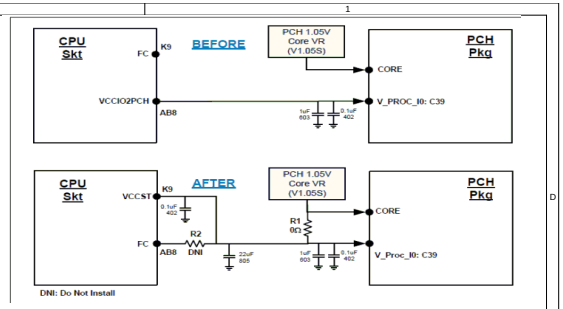

Follow CRB

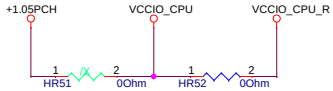

Decouple

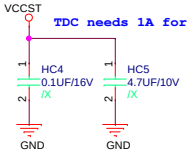

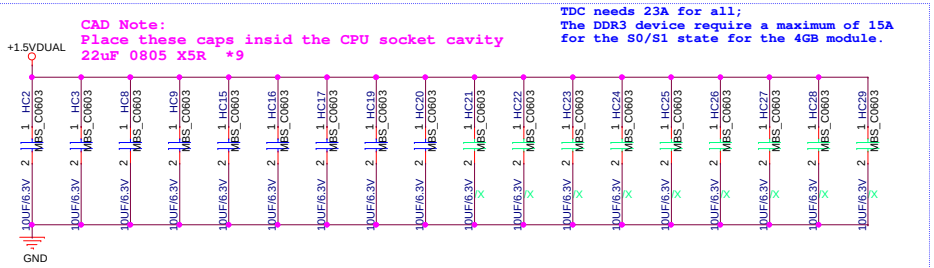

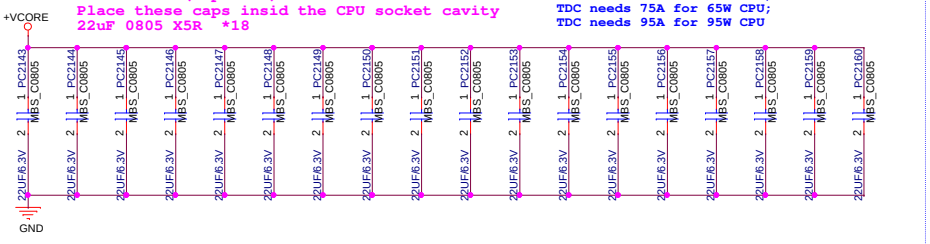

<Variant Name>

ASUS	Title : LGA1150_POWER		
ASUSTek COMPUTER INC.	Engineer: <OrgAddr1>		
Size A3	Project Name IMBM-H81C		Rev 1.00
Date: Tuesday, October 31, 2017	Sheet 9 of 78		

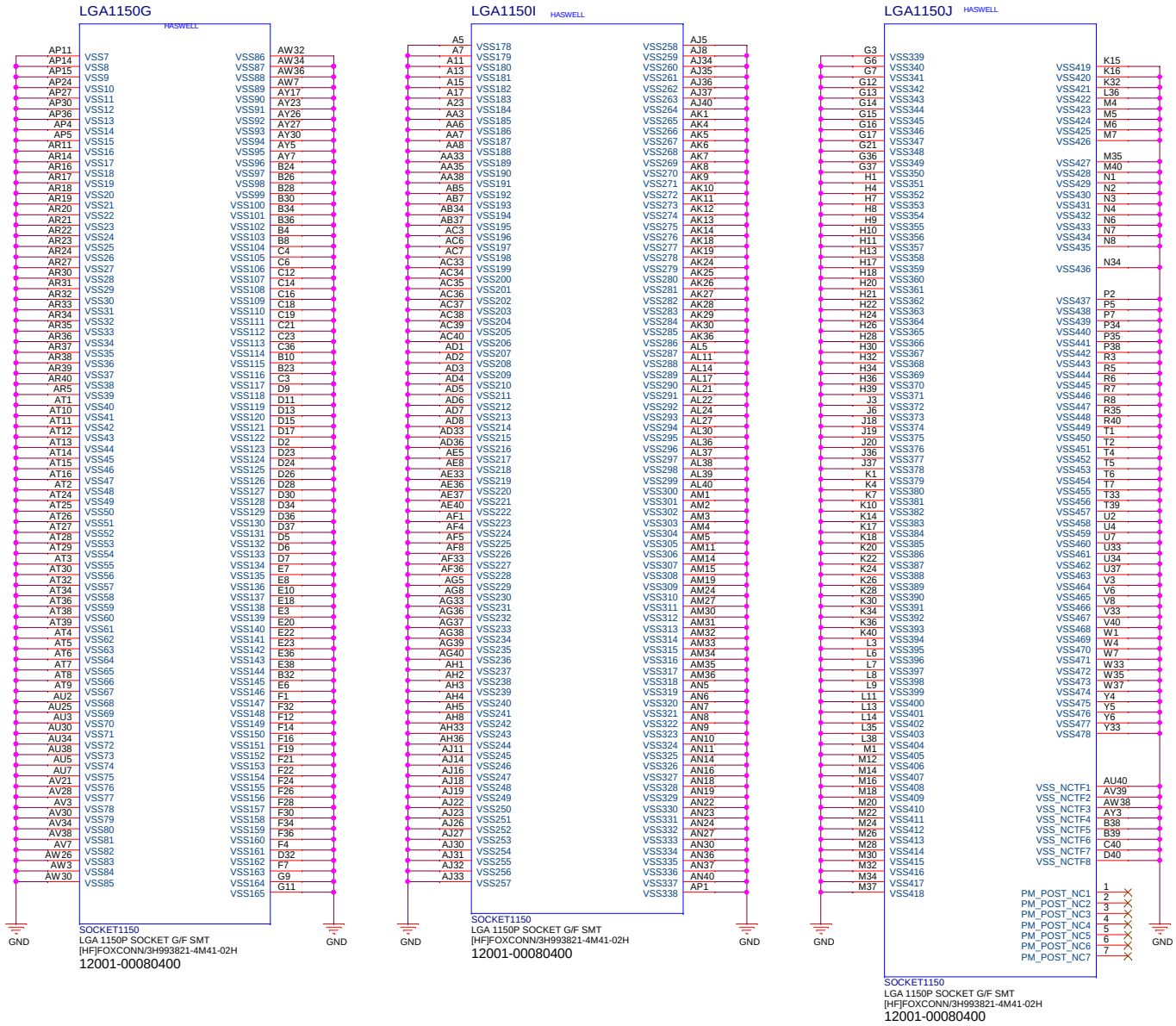

FOXCONN:
LGA1150 socket PN: 12001-00080400
New ILM+Cover PN: 13020-00061900
New Backplate PN: 13020-00062000
(Old ILM module PN: 13020-00061700)

LOTES:
LGA1150 socket PN: 12001-00080300
New ILM+Cover PN: 13020-00061900
New Backplate PN: 13020-00062000
(Old ILM module PN: 13020-00060400)

ILM1

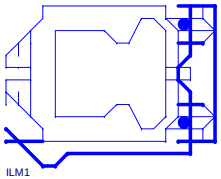

13020-00063300
FOXCONN/PT44L71-6411
(LGA1156 ILM+COVER)

ILM2

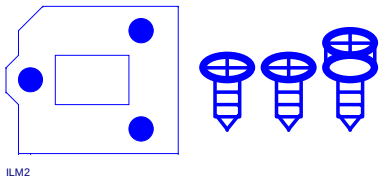

13020-00062000

AJOHO/CSCZ-PLATE003
(LGA1156 BACKPLATE
3SCREW)

<Variant Name>

ASUS	Title : LGA1150_GND	
ASUSTek COMPUTER INC.	Engineer: <OrgAddr1>	
Size: A3	Project Name: IMBM-H81C	Rev: 1.00
Date: Tuesday, October 31, 2017	Sheet 10 of 78	

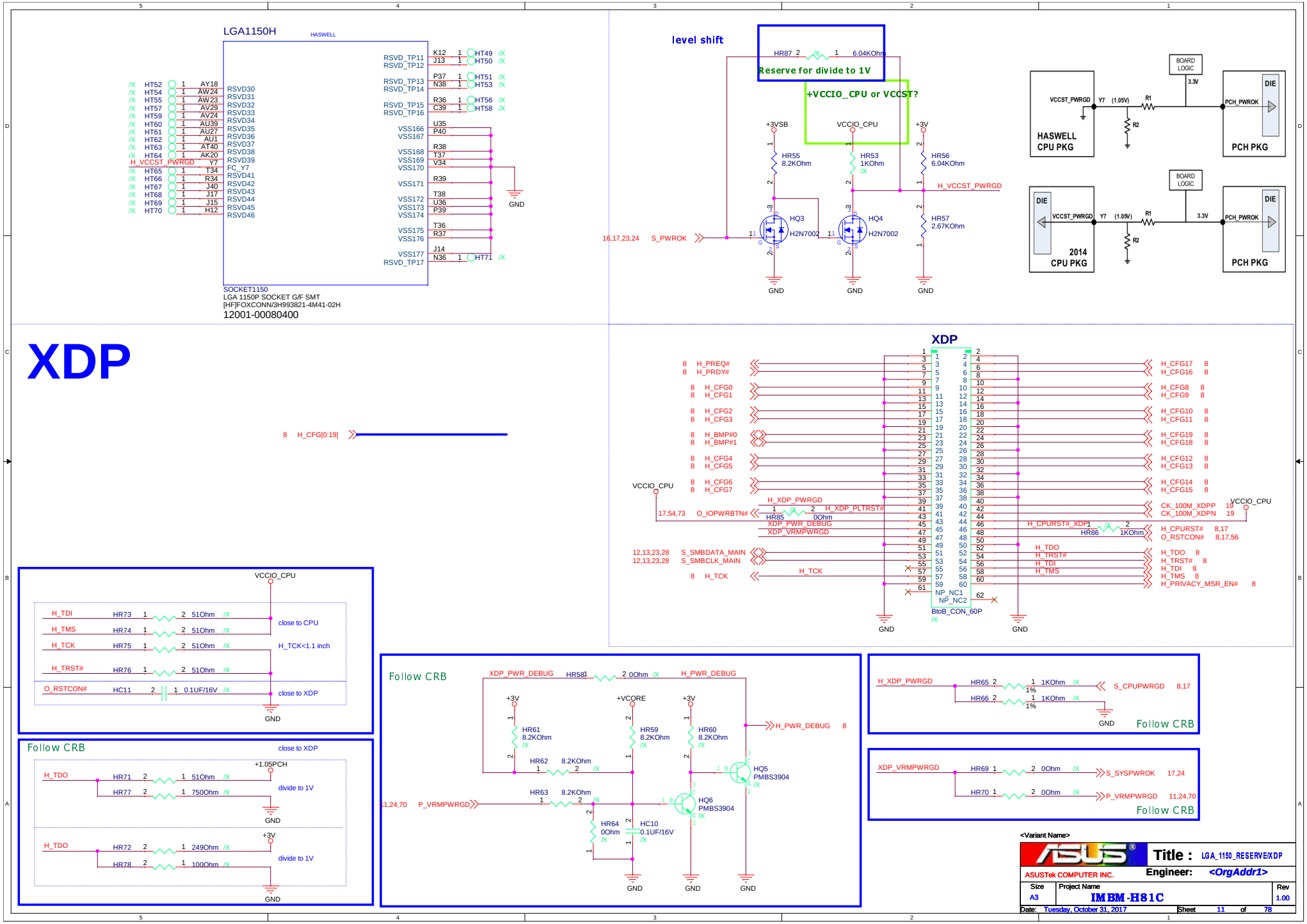

<Variant Name>

Title : LGA_1150_RESERVE/XDP

ASUSTek COMPUTER INC.

Engineer: <OrgAddr1>

Size	Project Name	Rev
A3	IMBM-H81C	1.00

Date: Tuesday, October 31, 2017 Sheet 11 of 78

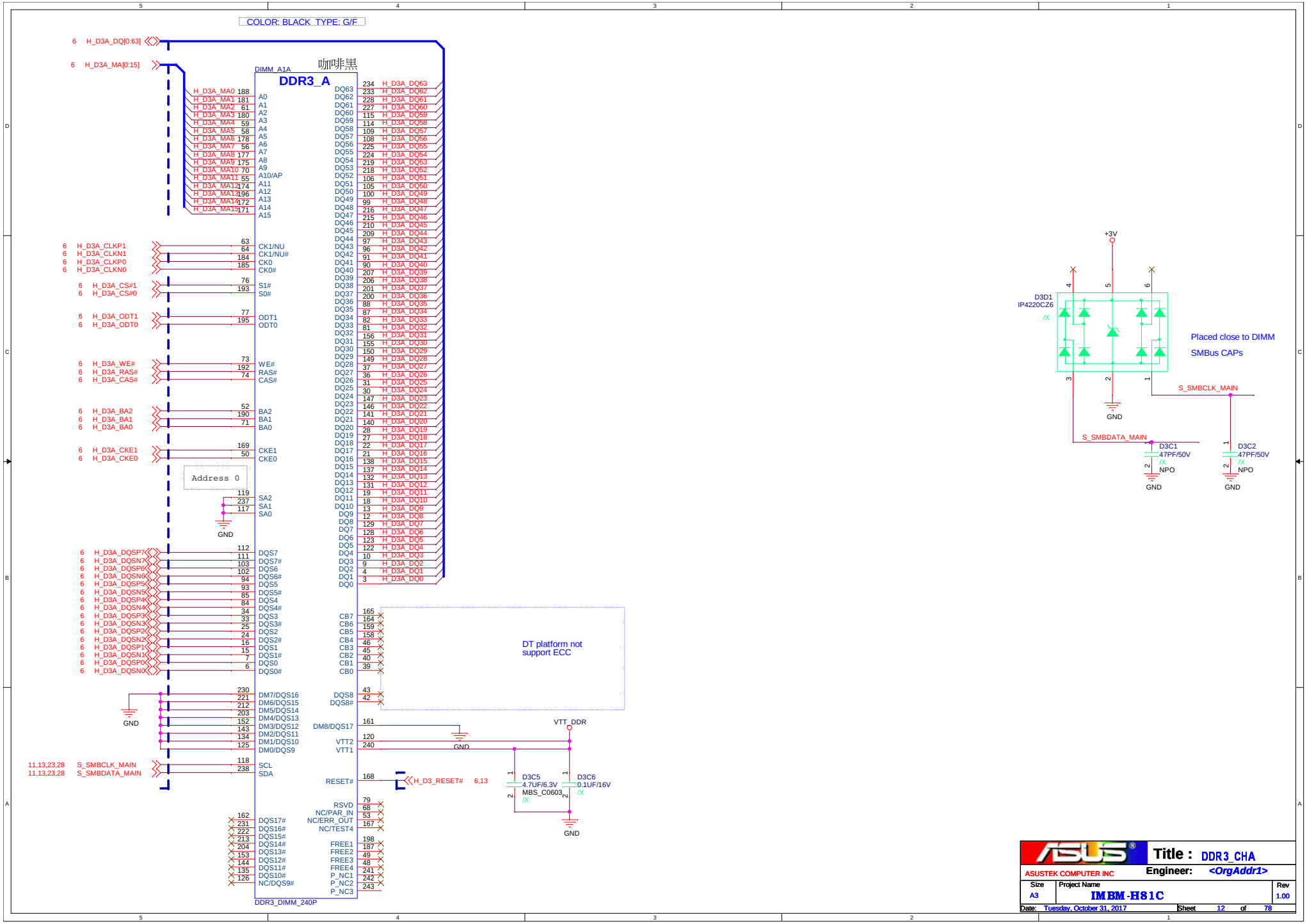
COLOR: BLACK TYPE: G/F
咖啡黑
DIMM_A1A
DDR3_A
6 H_D3A_DQ[0:63]
6 H_D3A_MA[0:15]
H_D3A_MA0 188 A0
H_D3A_MA1 181 A1
H_D3A_MA2 61 A2
H_D3A_MA3 180 A3
H_D3A_MA4 59 A4
H_D3A_MA5 58 A5
H_D3A_MA6 178 A6
H_D3A_MA7 56 A7
H_D3A_MA8 177 A8
H_D3A_MA9 175 A9
H_D3A_MA10 70 A10/AP
H_D3A_MA11 55 A11
H_D3A_MA12 174 A12
H_D3A_MA13 196 A13
H_D3A_MA14 172 A14
H_D3A_MA15 171 A15
6 H_D3A_CLKP1 63 CK1/NU
6 H_D3A_CLKN1 64 CK1/NU#
6 H_D3A_CLKP0 184 CK0
6 H_D3A_CLKN0 185 CK0#
6 H_D3A_CS#1 76 S1#
6 H_D3A_CS#0 193 S0#
6 H_D3A_ODT1 77 ODT1
6 H_D3A_ODT0 195 ODT0
6 H_D3A_WE# 73 WE#
6 H_D3A_RAS# 192 RAS#
6 H_D3A_CAS# 74 CAS#
6 H_D3A_BA2 52 BA2
6 H_D3A_BA1 190 BA1
6 H_D3A_BA0 71 BA0
6 H_D3A_CKE1 169 CKE1
6 H_D3A_CKE0 50 CKE0
Address 0
119 SA2
237 SA1
117 SA0
GND
6 H_D3A_DQSP7 112 DQS7
6 H_D3A_DQSN7 111 DQS7#
6 H_D3A_DQSP6 103 DQS6
6 H_D3A_DQSN6 102 DQS6#
6 H_D3A_DQSP5 94 DQS5
6 H_D3A_DQSN5 93 DQS5#
6 H_D3A_DQSP4 85 DQS4
6 H_D3A_DQSN4 84 DQS4#
6 H_D3A_DQSP3 34 DQS3
6 H_D3A_DQSN3 33 DQS3#
6 H_D3A_DQSP2 25 DQS2
6 H_D3A_DQSN2 24 DQS2#
6 H_D3A_DQSP1 16 DQS1
6 H_D3A_DQSN1 15 DQS1#
6 H_D3A_DQSP0 7 DQS0
6 H_D3A_DQSN0 6 DQS0#
GND
230 DM7/DQS16
221 DM6/DQS15
212 DM5/DQS14
203 DM4/DQS13
152 DM3/DQS12
143 DM2/DQS11
134 DM1/DQS10
125 DM0/DQS9
11,13,23,28 S_SMBCLK_MAIN 118 SCL
11,13,23,28 S_SMBDATA_MAIN 238 SDA
162 DQS17#
231 DQS16#
222 DQS15#
213 DQS14#
204 DQS13#
153 DQS12#
144 DQS11#
135 DQS10#
126 NC/DQS9#
DQ63 234 H_D3A_DQ63
DQ62 233 H_D3A_DQ62
DQ61 228 H_D3A_DQ61
DQ60 227 H_D3A_DQ60
DQ59 115 H_D3A_DQ59
DQ58 114 H_D3A_DQ58
DQ57 109 H_D3A_DQ57
DQ56 108 H_D3A_DQ56
DQ55 225 H_D3A_DQ55
DQ54 224 H_D3A_DQ54
DQ53 219 H_D3A_DQ53
DQ52 218 H_D3A_DQ52
DQ51 106 H_D3A_DQ51
DQ50 105 H_D3A_DQ50
DQ49 100 H_D3A_DQ49
DQ48 99 H_D3A_DQ48
DQ47 216 H_D3A_DQ47
DQ46 215 H_D3A_DQ46
DQ45 210 H_D3A_DQ45
DQ44 209 H_D3A_DQ44
DQ43 97 H_D3A_DQ43
DQ42 96 H_D3A_DQ42
DQ41 91 H_D3A_DQ41
DQ40 90 H_D3A_DQ40
DQ39 207 H_D3A_DQ39
DQ38 206 H_D3A_DQ38
DQ37 201 H_D3A_DQ37
DQ36 200 H_D3A_DQ36
DQ35 88 H_D3A_DQ35
DQ34 87 H_D3A_DQ34
DQ33 82 H_D3A_DQ33
DQ32 81 H_D3A_DQ32
DQ31 156 H_D3A_DQ31
DQ30 155 H_D3A_DQ30
DQ29 150 H_D3A_DQ29
DQ28 149 H_D3A_DQ28
DQ27 37 H_D3A_DQ27
DQ26 36 H_D3A_DQ26
DQ25 31 H_D3A_DQ25
DQ24 30 H_D3A_DQ24
DQ23 147 H_D3A_DQ23
DQ22 146 H_D3A_DQ22
DQ21 141 H_D3A_DQ21
DQ20 140 H_D3A_DQ20
DQ19 28 H_D3A_DQ19
DQ18 27 H_D3A_DQ18
DQ17 22 H_D3A_DQ17
DQ16 21 H_D3A_DQ16
DQ15 138 H_D3A_DQ15
DQ14 137 H_D3A_DQ14
DQ13 132 H_D3A_DQ13
DQ12 131 H_D3A_DQ12
DQ11 19 H_D3A_DQ11
DQ10 18 H_D3A_DQ10
DQ9 13 H_D3A_DQ9
DQ8 12 H_D3A_DQ8
DQ7 129 H_D3A_DQ7
DQ6 128 H_D3A_DQ6
DQ5 123 H_D3A_DQ5
DQ4 122 H_D3A_DQ4
DQ3 10 H_D3A_DQ3
DQ2 9 H_D3A_DQ2
DQ1 4 H_D3A_DQ1
DQ0 3 H_D3A_DQ0
CB7 165
CB6 164
CB5 159
CB4 158
CB3 46
CB2 45
CB1 40
CB0 39
DT platform not support ECC
DQS8 43
DQS8# 42
DM8/DQS17 161
VTT2 120
VTT1 240
VTT_DDR
GND
RESET# 168
H_D3_RESET# 6,13
D3C5 4.7UF/6.3V MBS_C0603 /X
D3C6 0.1UF/16V /X
RSVD 79
NC/PAR_IN 68
NC/ERR_OUT 53
NC/TEST4 167
FREE1 198
FREE2 187
FREE3 49
FREE4 48
P_NC1 241
P_NC2 242
P_NC3 243
DDR3_DIMM_240P
+3V
D3D1 IP4220CZ6 /X
Placed close to DIMM
SMBus CAPs
S_SMBCLK_MAIN
S_SMBDATA_MAIN
D3C1 47PF/50V /X NPO
D3C2 47PF/50V /X NPO
GND
ASUS
Title : DDR3_CHA
ASUSTEK COMPUTER INC
Engineer: <OrgAddr1>
Size A3
Project Name IMBM-H81C
Rev 1.00
Date: Tuesday, October 31, 2017
Sheet 12 of 78

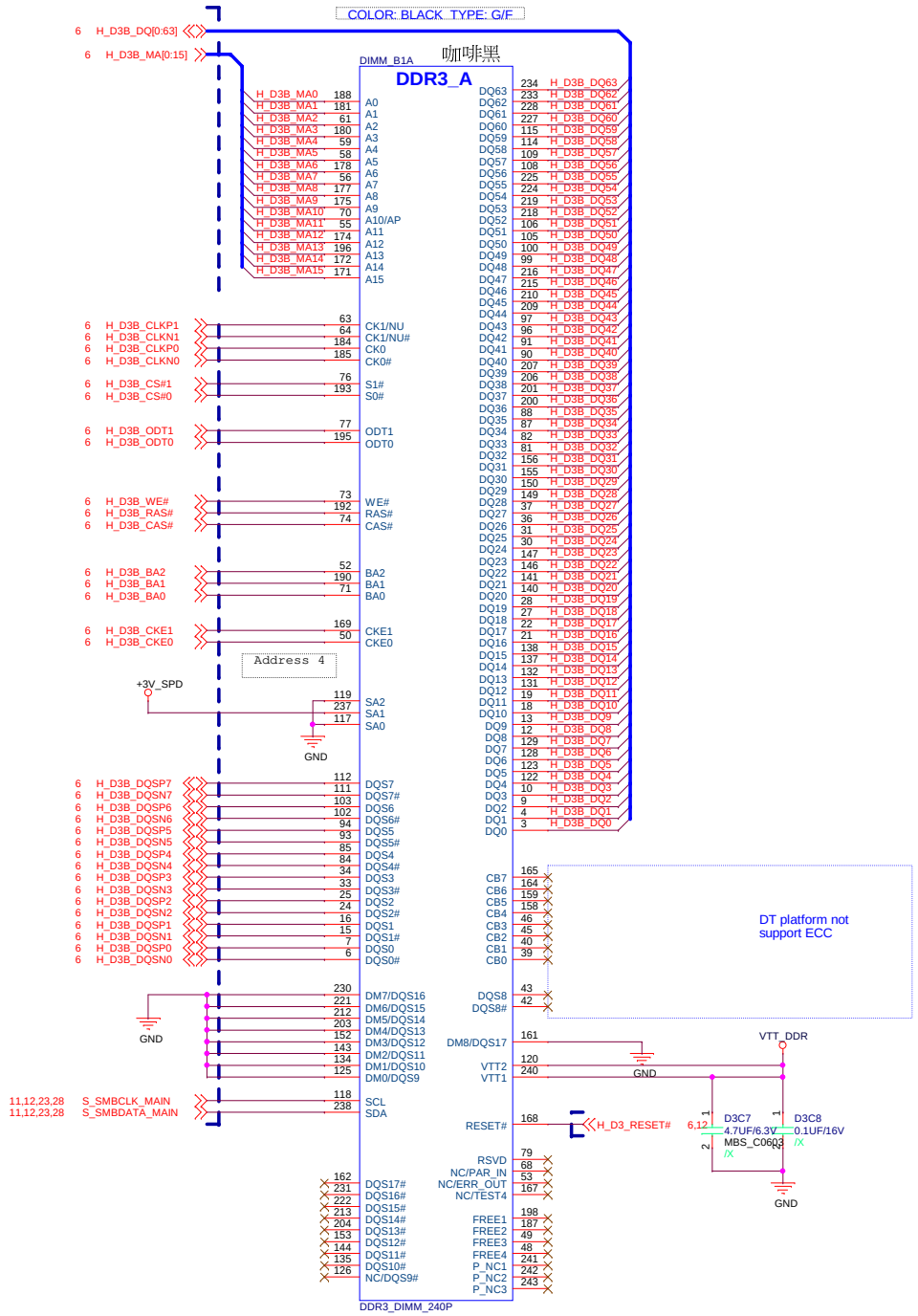

ASUS

ASUSTEK COMPUTER INC

Title : DDR3_CHB

Engineer: <OrgAddr1>

Size	Project Name	Rev
A3	IMBM-H81C	1.00

Date: Tuesday, October 31, 2017 Sheet 13 of 78

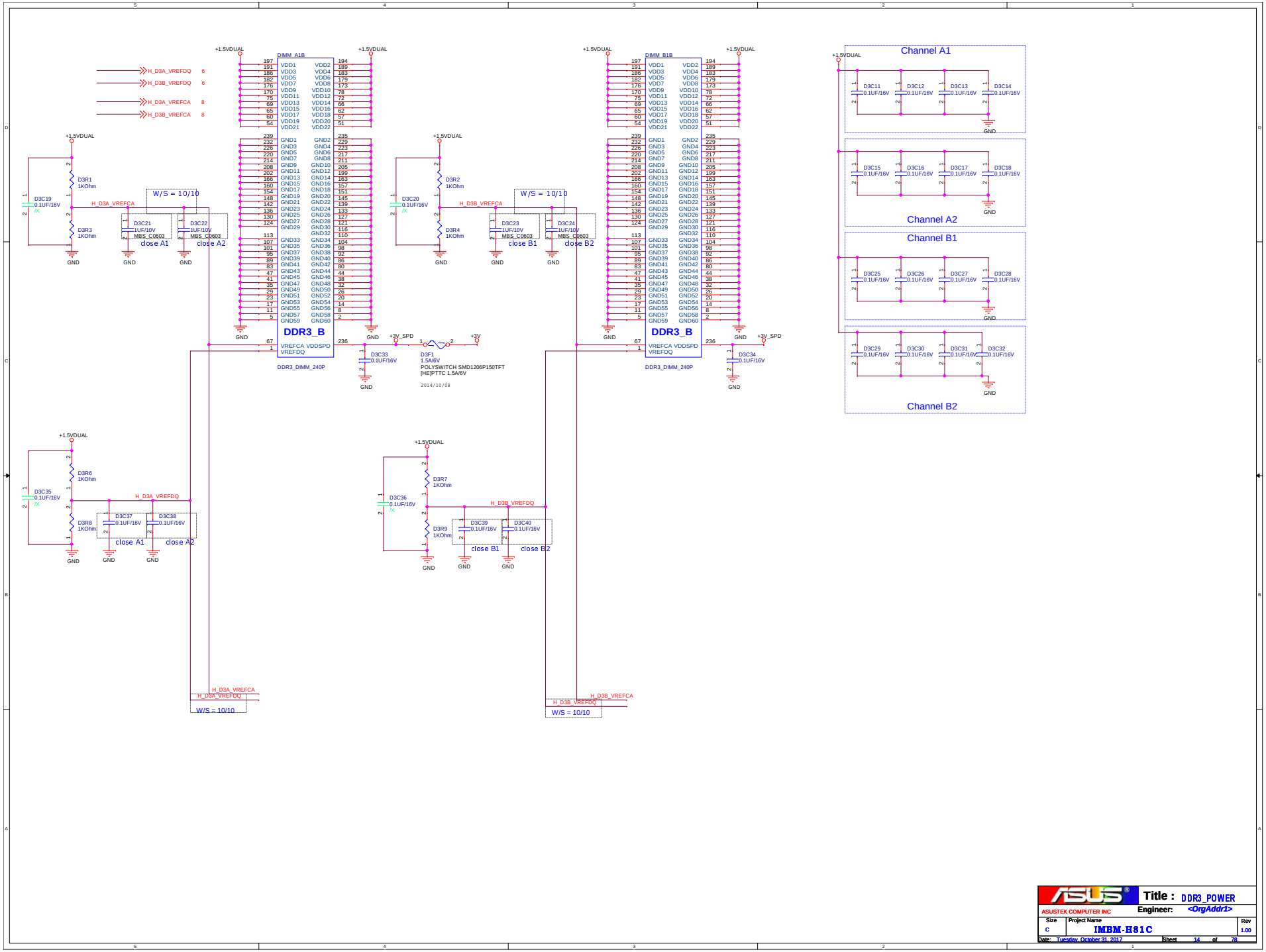

ASUSTEK COMPUTER INC

Title : DDR3_POWER

Engineer: <OrgAddr1>

Size	Project Name	Rev
C	IMBM-H81C	1.00

Date: Tuesday, October 31, 2017 Sheet 14 of 78

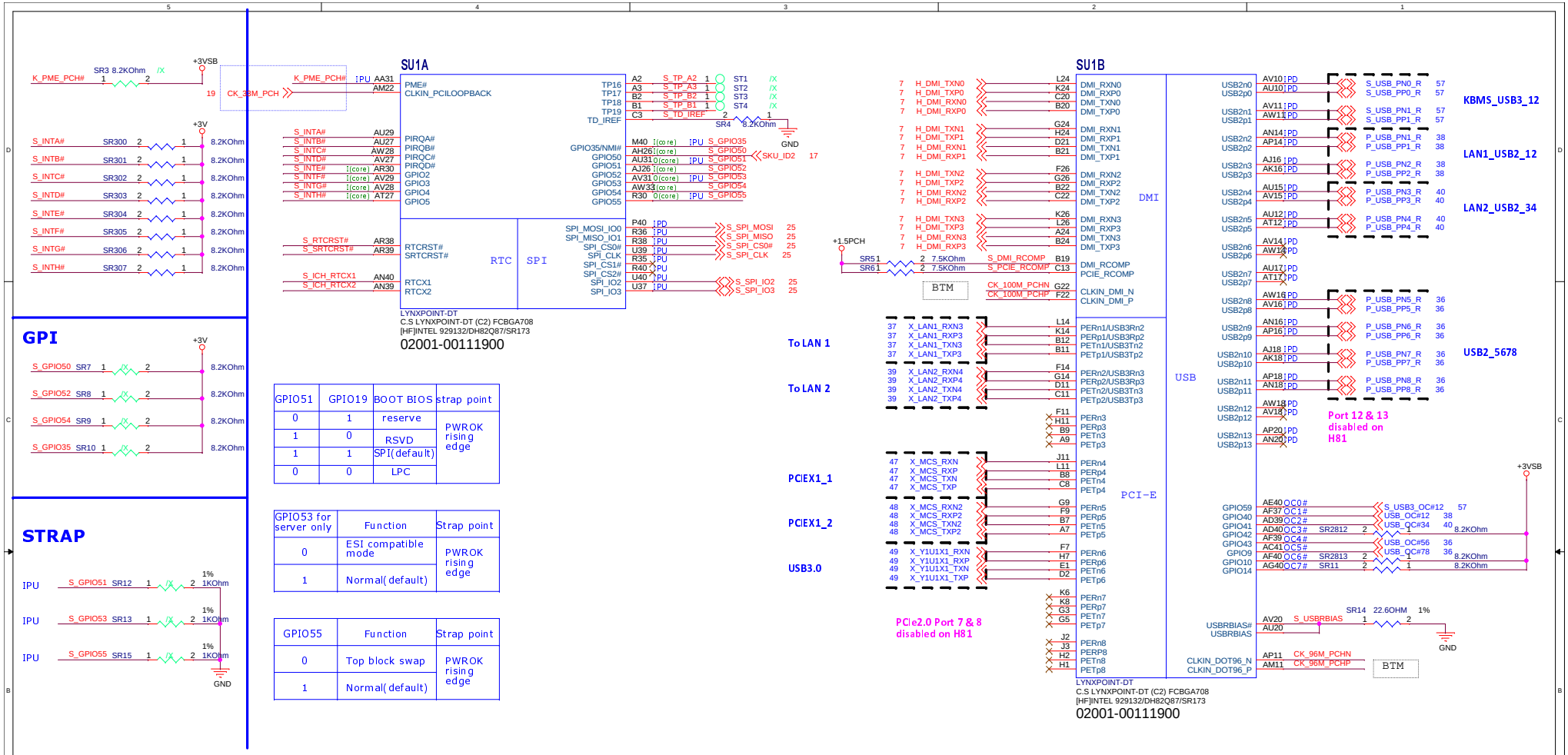

GPIO51	GPIO19	BOOT BIOS	strap point
0	1	reserve	PWROK rising edge
1	0	RSVD	
1	1	SPI(default)	
0	0	LPC	

GPIO53 for server only	Function	Strap point
0	ESI compatible mode	PWROK rising edge
1	Normal(default)	

GPIO55	Function	Strap point
0	Top block swap	PWROK rising edge
1	Normal(default)	

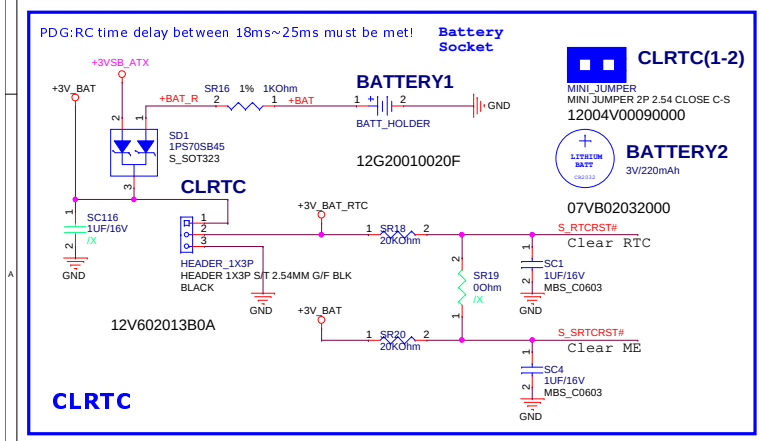

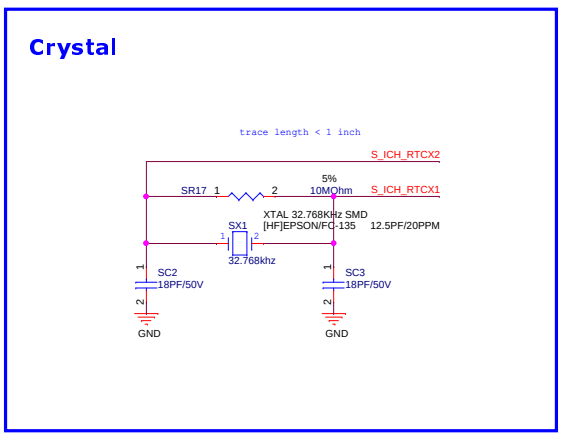

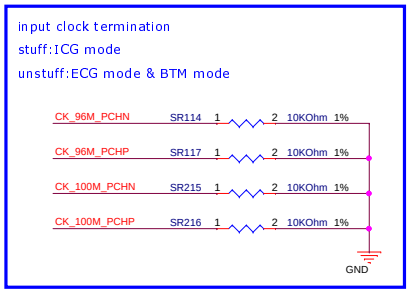

<Variant Name>

ASUS	Title :	LYNX-1(DMI/PCIE/USB/SPI)
ASUSTek COMPUTER INC.	Engineer:	<OrgAddr1>
Size: Custom	Project Name: IMBM-H81C	Rev: 1.00
Date: Tuesday, October 31, 2017	Sheet 15 of 78	

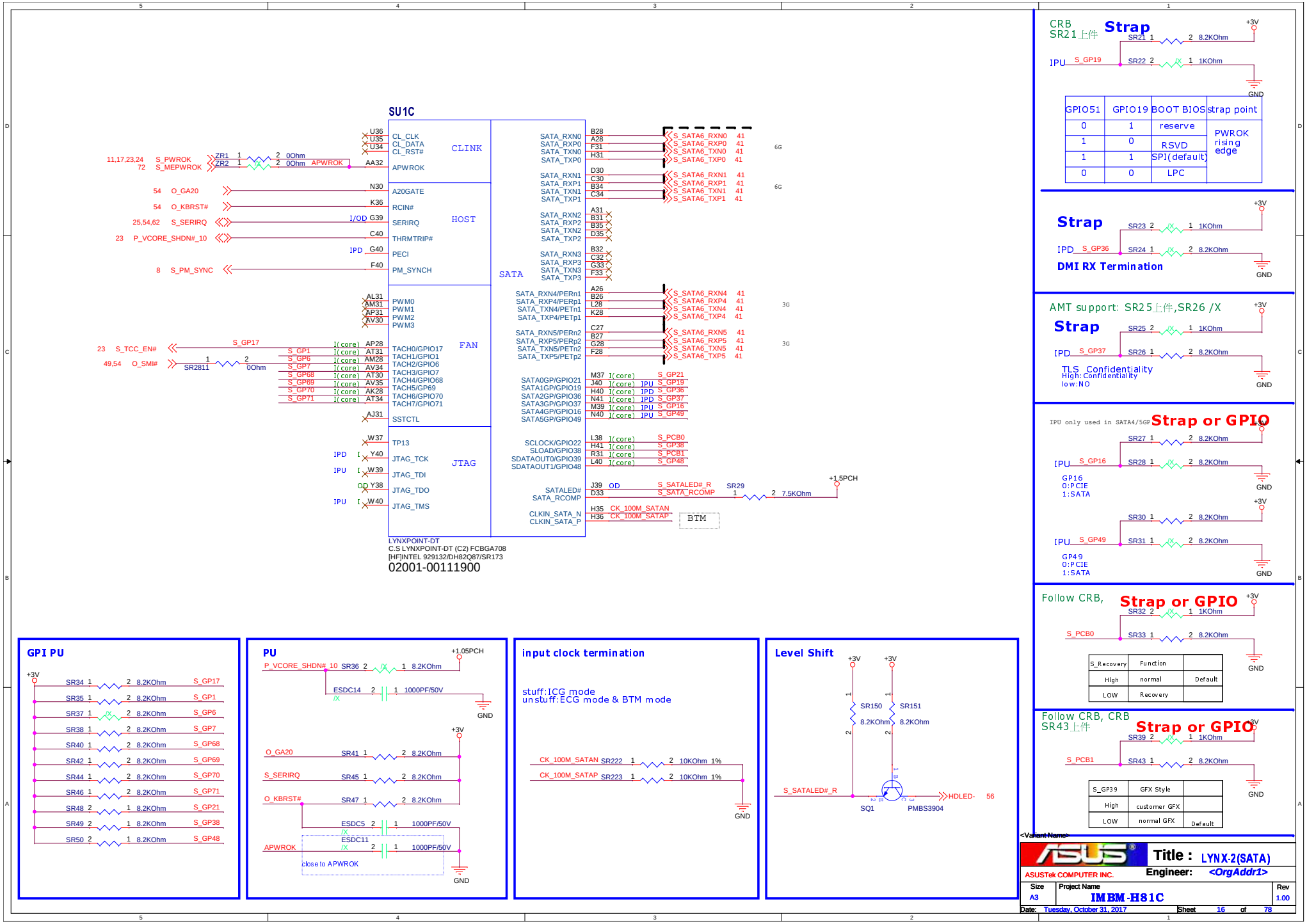
SU1C
CLINK
HOST
FAN
JTAG
SATA
CL_CLK
CL_DATA
CL_RST#
APWROK
A20GATE
RCIN#
SERIRQ
THRMTRIP#
PECI
PM_SYNCH
PWM0
PWM1
PWM2
PWM3
TACH0/GPIO17
TACH1/GPIO1
TACH2/GPIO6
TACH3/GPIO7
TACH4/GPIO68
TACH5/GP69
TACH6/GPIO70
TACH7/GPIO71
SSTCTL
TP13
JTAG_TCK
JTAG_TDI
JTAG_TDO
JTAG_TMS
SATA_RXN0
SATA_RXP0
SATA_TXN0
SATA_TXP0
SATA_RXN1
SATA_RXP1
SATA_TXN1
SATA_TXP1
SATA_RXN2
SATA_RXP2
SATA_TXN2
SATA_TXP2
SATA_RXN3
SATA_RXP3
SATA_TXN3
SATA_TXP3
SATA_RXN4/PERn1
SATA_RXP4/PERp1
SATA_TXN4/PETn1
SATA_TXP4/PETp1
SATA_RXN5/PERn2
SATA_RXP5/PERp2
SATA_TXN5/PETn2
SATA_TXP5/PETp2
SATA0GP/GPIO21
SATA1GP/GPIO19
SATA2GP/GPIO36
SATA3GP/GPIO37
SATA4GP/GPIO16
SATA5GP/GPIO49
SCLOCK/GPIO22
SLOAD/GPIO38
SDATAOUT0/GPIO39
SDATAOUT1/GPIO48
SATALED#
SATA_RCOMP
CLKIN_SATA_N
CLKIN_SATA_P
BTM
LYNXPOINT-DT
C.S LYNXPOINT-DT (C2) FCBGA708
[HF]INTEL 929132/DH82Q87/SR173
02001-00111900
S_PWROK
S_MEPWROK
O_GA20
O_KBRST#
S_SERIRQ
P_VCORE_SHDN#_10
S_PM_SYNC
S_TCC_EN#
O_SMI#
S_SATA6_RXN0
S_SATA6_RXP0
S_SATA6_TXN0
S_SATA6_TXP0
S_SATA6_RXN1
S_SATA6_RXP1
S_SATA6_TXN1
S_SATA6_TXP1
S_SATA6_RXN4
S_SATA6_RXP4
S_SATA6_TXN4
S_SATA6_TXP4
S_SATA6_RXN5
S_SATA6_RXP5
S_SATA6_TXN5
S_SATA6_TXP5
S_SATALED#_R
S_SATA_RCOMP
CK_100M_SATAN
CK_100M_SATAP
+1.5PCH
SR29 7.5KOhm
GND
CRB SR21上件
Strap
IPU S_GP19
SR21 8.2KOhm
SR22 1KOhm
GPIO51 GPIO19 BOOT BIOS strap point
0 1 reserve PWROK rising edge
1 0 RSVD
1 1 SPI(default)
0 0 LPC
Strap
IPD S_GP36
SR23 1KOhm
SR24 8.2KOhm
DMI RX Termination
AMT support: SR25上件,SR26 /X
Strap
IPD S_GP37
SR25 1KOhm
SR26 8.2KOhm
TLS Confidentiality
High:Confidentiality
low:NO
IPU only used in SATA4/5GP
Strap or GPIO
IPU S_GP16
SR27 8.2KOhm
SR28 8.2KOhm
GP16
0:PCIE
1:SATA
IPU S_GP49
SR30 8.2KOhm
SR31 8.2KOhm
GP49
0:PCIE
1:SATA
Follow CRB,
Strap or GPIO
S_PCB0
SR32 1KOhm
SR33 8.2KOhm
S_Recovery Function
High normal Default
LOW Recovery
Follow CRB, CRB SR43上件
Strap or GPIO
S_PCB1
SR39 1KOhm
SR43 8.2KOhm
S_GP39 GFX Style
High customer GFX
LOW normal GFX Default
GPI PU
SR34 S_GP17
SR35 S_GP1
SR37 S_GP6
SR38 S_GP7
SR40 S_GP68
SR42 S_GP69
SR44 S_GP70
SR46 S_GP71
SR48 S_GP21
SR49 S_GP38
SR50 S_GP48
PU
+1.05PCH
P_VCORE_SHDN#_10 SR36 8.2KOhm
ESDC14 1000PF/50V
O_GA20 SR41 8.2KOhm
S_SERIRQ SR45 8.2KOhm
O_KBRST# SR47 8.2KOhm
ESDC5 1000PF/50V
APWROK ESDC11 1000PF/50V
close to APWROK
input clock termination
stuff:ICG mode
unstuff:ECG mode & BTM mode
CK_100M_SATAN SR222 10KOhm 1%
CK_100M_SATAP SR223 10KOhm 1%
Level Shift
SR150 8.2KOhm
SR151 8.2KOhm
S_SATALED#_R
HDLED- 56
SQ1 PMBS3904
ASUSTek COMPUTER INC.
Title : LYNX-2(SATA)
Engineer: <OrgAddr1>
Size A3
Project Name IMBM-H81C
Rev 1.00
Date: Tuesday, October 31, 2017
Sheet 16 of 78

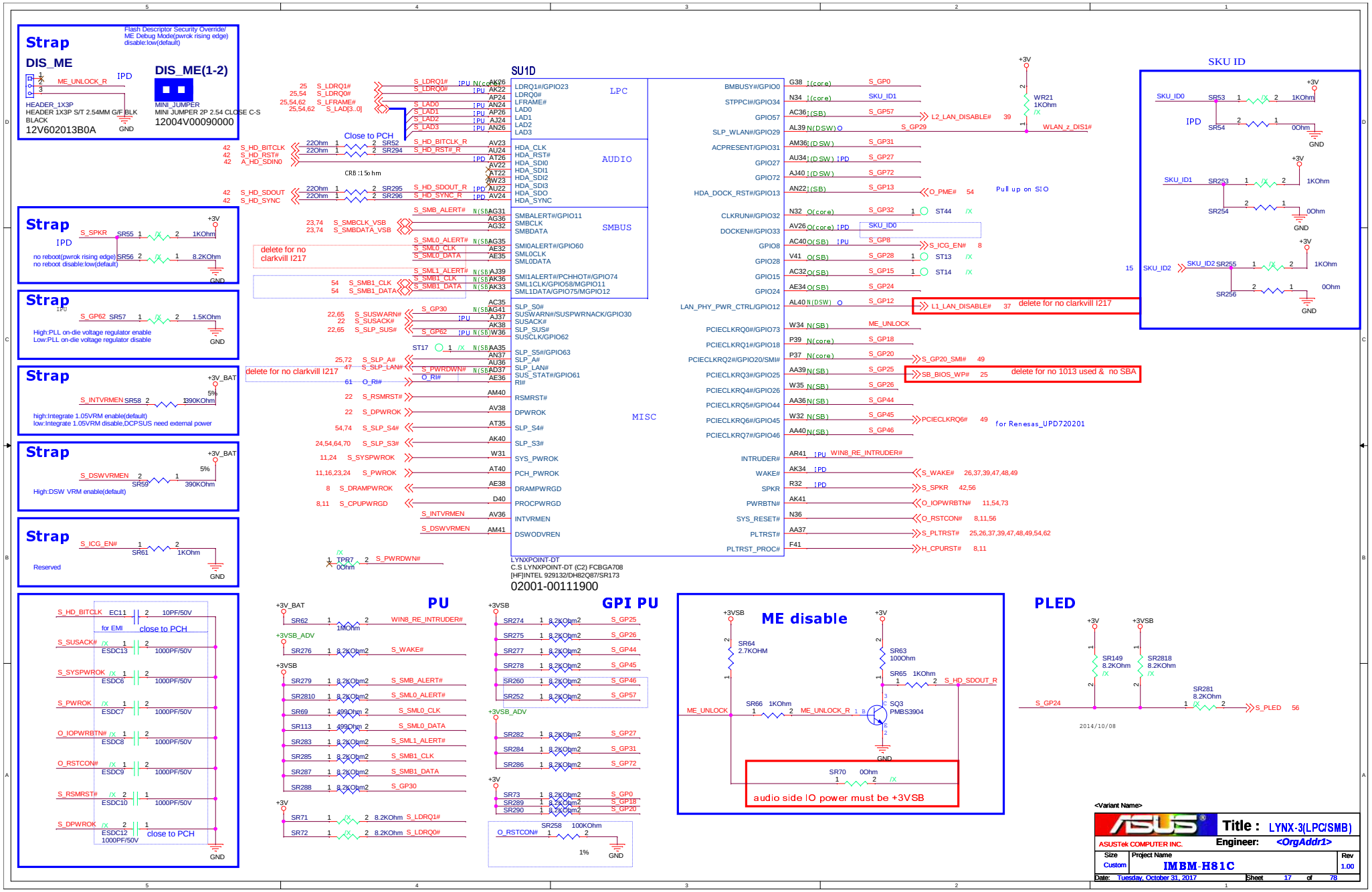
Strap
DIS_ME
Flash Descriptor Security Override/
ME Debug Mode(pwrok rising edge)
disable:low(default)
ME_UNLOCK_R
IPD
HEADER_1X3P
HEADER 1X3P S/T 2.54MM G/F BLK
BLACK
12V602013B0A
GND
DIS_ME(1-2)
MINI_JUMPER
MINI JUMPER 2P 2.54 CLOSE C-S
12004V00090000
SU1D
LPC
AUDIO
SMBUS
MISC
LDRQ1#/GPIO23
LDRQ0#
LFRAME#
LAD0
LAD1
LAD2
LAD3
HDA_CLK
HDA_RST#
HDA_SDI0
HDA_SDI1
HDA_SDI2
HDA_SDI3
HDA_SDO
HDA_SYNC
SMBALERT#/GPIO11
SMBCLK
SMBDATA
SMI0ALERT#/GPIO60
SML0CLK
SML0DATA
SMI1ALERT#/PCHHOT#/GPIO74
SML1CLK/GPIO58/MGPIO11
SML1DATA/GPIO75/MGPIO12
SLP_S0#
SUSWARN#/SUSPWRNACK/GPIO30
SUSACK#
SLP_SUS#
SUSCLK/GPIO62
SLP_S5#/GPIO63
SLP_A#
SLP_LAN#
SUS_STAT#/GPIO61
RI#
RSMRST#
DPWROK
SLP_S4#
SLP_S3#
SYS_PWROK
PCH_PWROK
DRAMPWRGD
PROCPWRGD
INTVRMEN
DSWODVREN
BMBUSY#/GPIO0
STPPCI#/GPIO34
GPIO57
SLP_WLAN#/GPIO29
ACPRESENT/GPIO31
GPIO27
GPIO72
HDA_DOCK_RST#/GPIO13
CLKRUN#/GPIO32
DOCKEN#/GPIO33
GPIO8
GPIO28
GPIO15
GPIO24
LAN_PHY_PWR_CTRL/GPIO12
PCIECLKRQ0#/GPIO73
PCIECLKRQ1#/GPIO18
PCIECLKRQ2#/GPIO20/SMI#
PCIECLKRQ3#/GPIO25
PCIECLKRQ4#/GPIO26
PCIECLKRQ5#/GPIO44
PCIECLKRQ6#/GPIO45
PCIECLKRQ7#/GPIO46
INTRUDER#
WAKE#
SPKR
PWRBTN#
SYS_RESET#
PLTRST#
PLTRST_PROC#
LYNXPOINT-DT
C.S LYNXPOINT-DT (C2) FCBGA708
[HF]INTEL 929132/DH82Q87/SR173
02001-00111900
delete for no clarkvill I217
delete for no clarkvill I217
L2_LAN_DISABLE#
WLAN_z_DIS1#
Pull up on SIO
L1_LAN_DISABLE#
delete for no clarkvill I217
delete for no 1013 used & no SBA
for Renesas_UPD720201
SKU ID
PU
GPI PU
ME disable
audio side IO power must be +3VSB
PLED
2014/10/08
<Variant Name>
Title : LYNX-3(LPC/SMB)
ASUSTek COMPUTER INC.
Engineer: <OrgAddr1>
Size Custom
Project Name IMBM-H81C
Rev 1.00
Date: Tuesday, October 31, 2017
Sheet 17 of 78

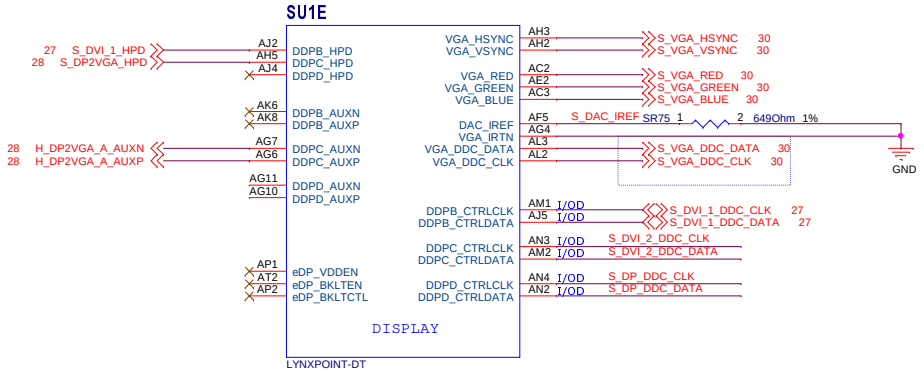

Strap

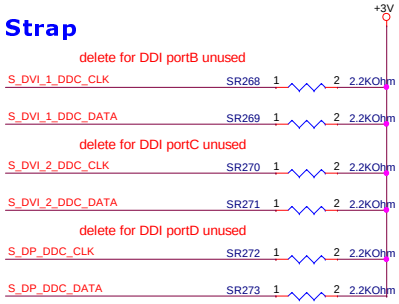

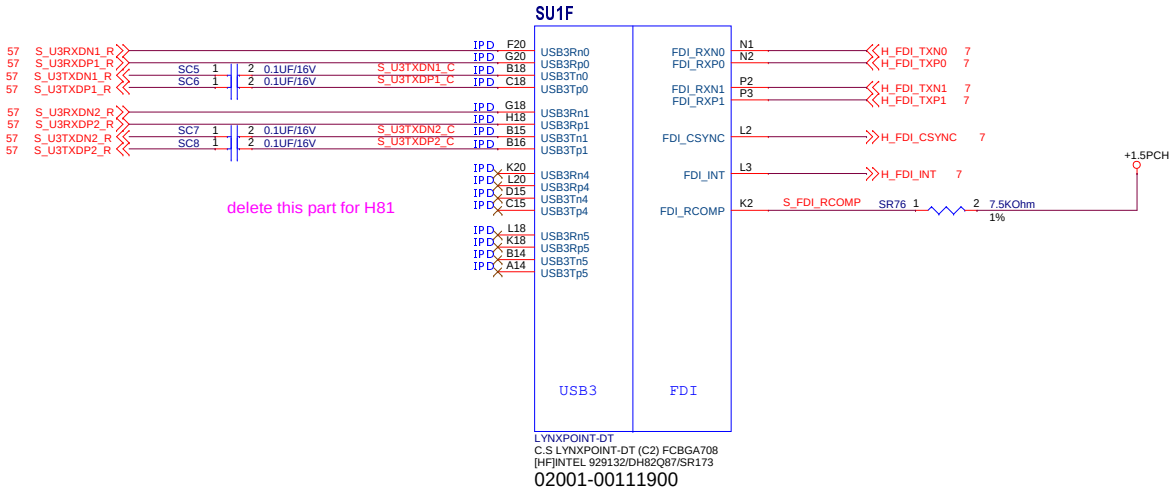

<Variant Name>

ASUS	Title :	LYNX-4(USB3/DISPLAY)
ASUSTek COMPUTER INC.	Engineer:	<OrgAddr1>
Size: A3	Project Name: IMBM-H81C	Rev: 1.00
Date: Tuesday, October 31, 2017	Sheet 18 of 78	

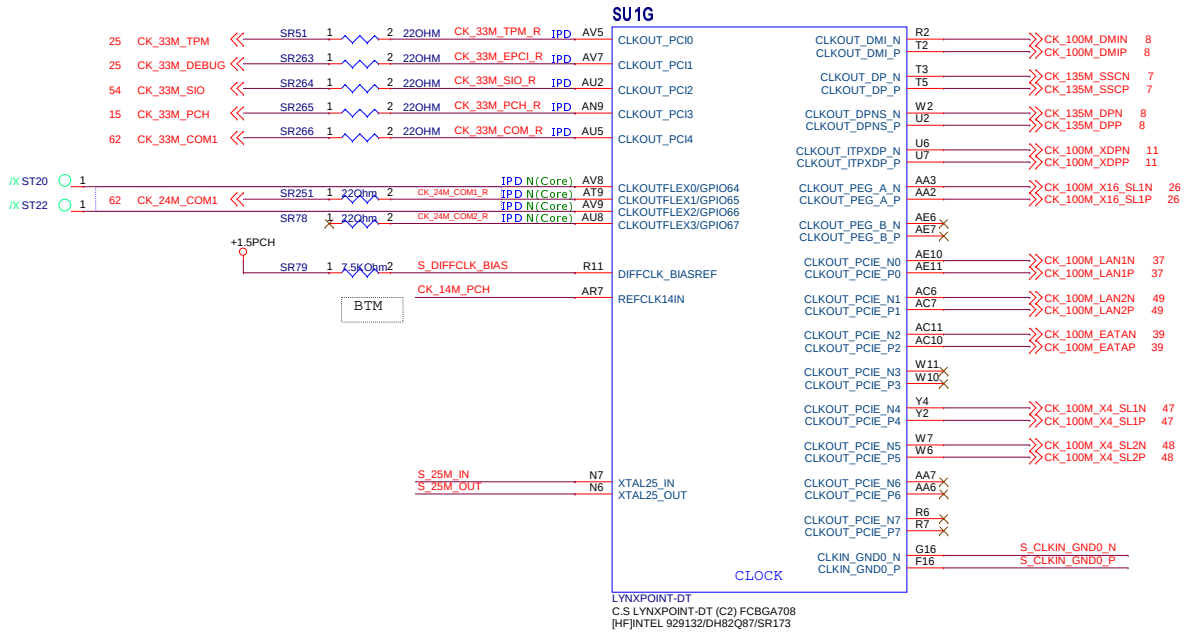

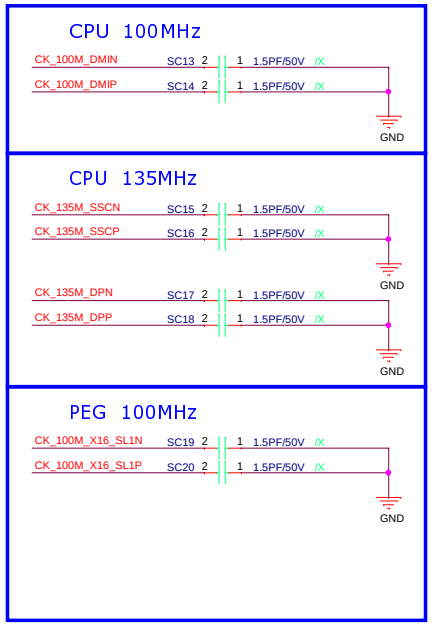

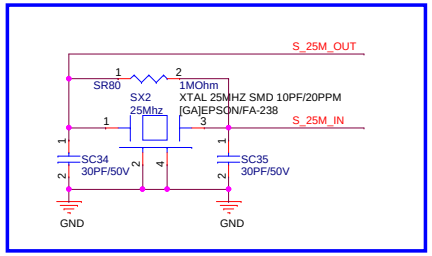

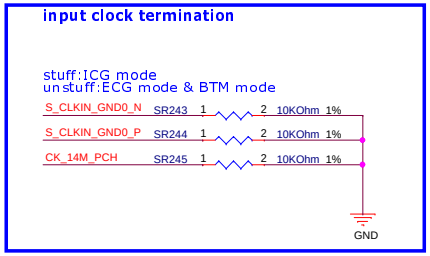

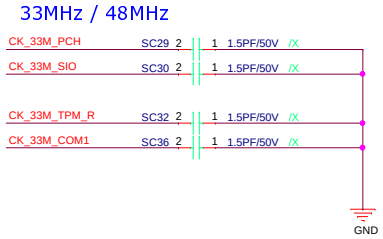

<Variant Name>

ASUSTek COMPUTER INC.	Title : LYNX-5(CLK)	
	Engineer: <OrgAddr1>	
Size A3	Project Name IMBM-H81C	Rev 1.00
Date: Tuesday, October 31, 2017	Sheet 19 of 78	

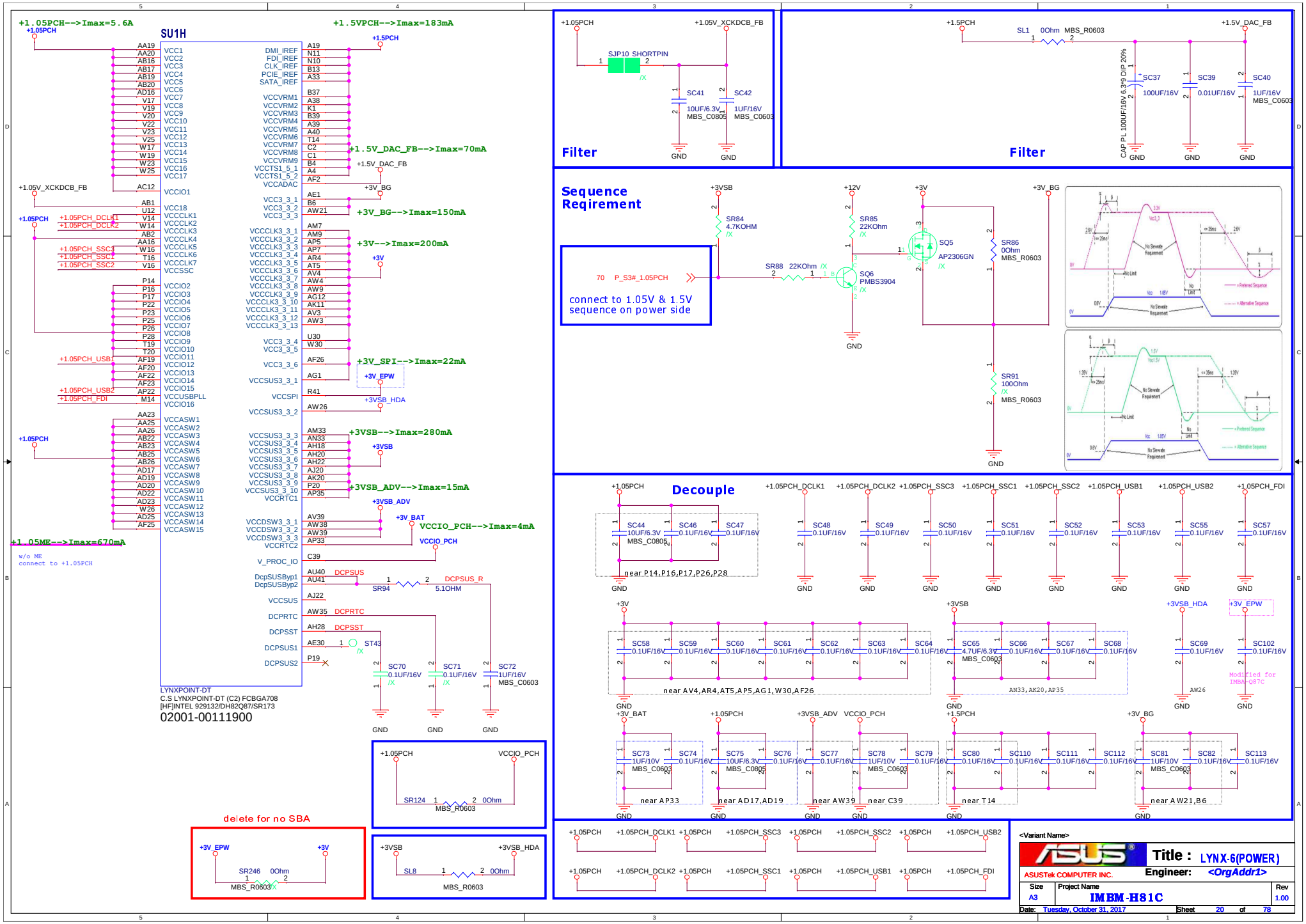
SU1H
+1.05PCH-->Imax=5.6A
+1.5VPCH-->Imax=183mA
+1.5V_DAC_FB-->Imax=70mA
+3V_BG-->Imax=150mA
+3V-->Imax=200mA
+3V_SPI-->Imax=22mA
+3VSB-->Imax=280mA
+3VSB_ADV-->Imax=15mA
VCCIO_PCH-->Imax=4mA
+1.05ME-->Imax=670mA
w/o ME
connect to +1.05PCH
LYNXPOINT-DT
C.S LYNXPOINT-DT (C2) FCBGA708
[HF]INTEL 929132/DH82Q87/SR173
02001-00111900
delete for no SBA
Filter
Filter
Sequence Reqirement
connect to 1.05V & 1.5V sequence on power side
Decouple
Title : LYNX-6(POWER)
ASUSTek COMPUTER INC.
Engineer: <OrgAddr1>
Size A3
Project Name IMBM-H81C
Rev 1.00
Date: Tuesday, October 31, 2017
Sheet 20 of 78

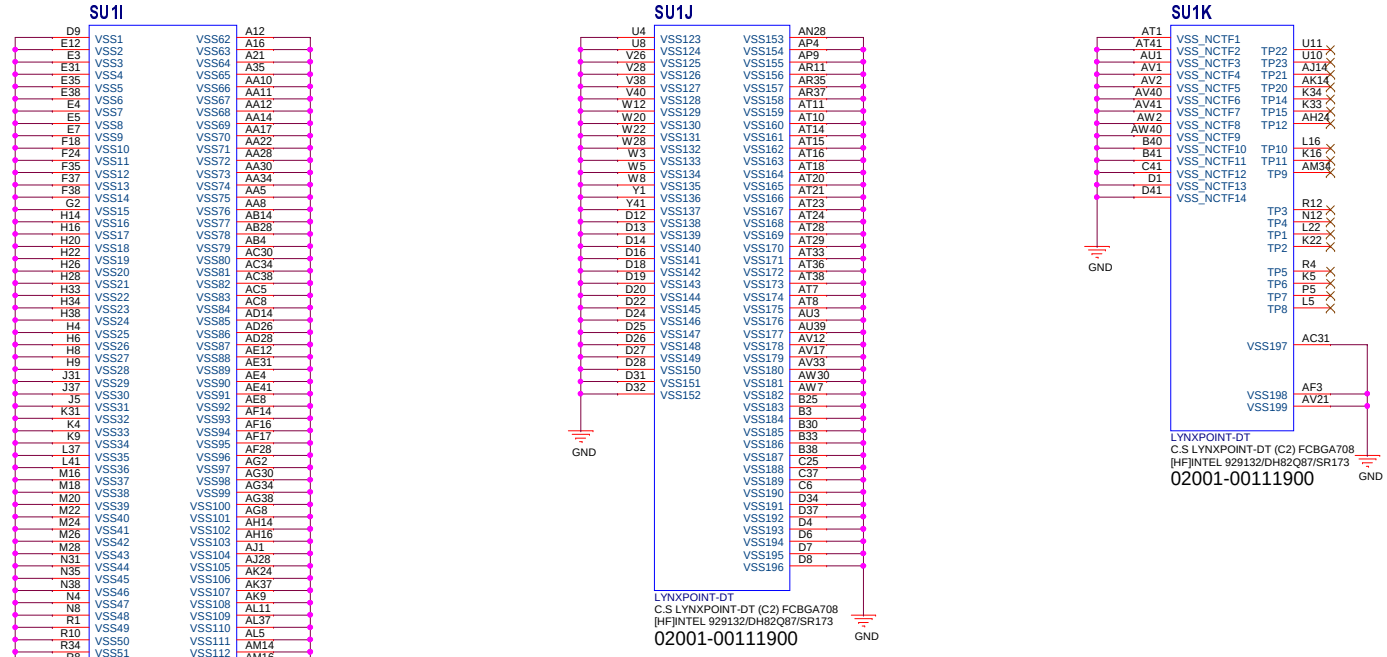

<Variant Name>

ASUSTek COMPUTER INC.

Title : LYNX-7(GND)

Engineer: <OrgAddr1>

Size	Project Name	Rev
A3	IMBM-H81C	1.00

Date: Tuesday, October 31, 2017 Sheet 21 of 78

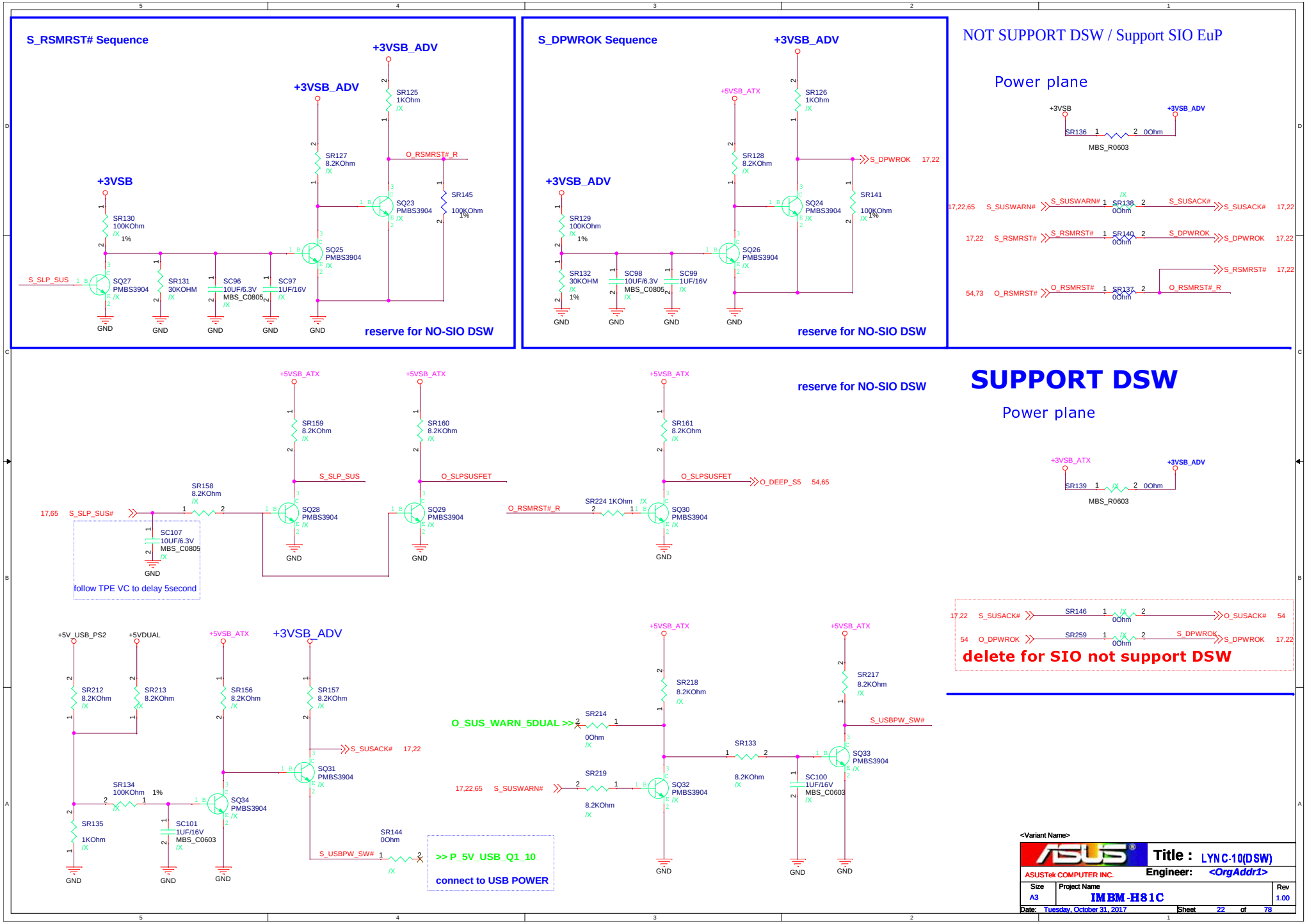
S_RSMRST# Sequence
+3VSB_ADV
+3VSB_ADV
+3VSB
SR125 1KOhm /X
SR127 8.2KOhm /X
O_RSMRST#_R
SR145 100KOhm 1%
SR130 100KOhm /X 1%
SQ23 PMBS3904 /X
SQ25 PMBS3904 /X
S_SLP_SUS
SQ27 PMBS3904 /X
SR131 30KOHM /X
SC96 10UF/6.3V MBS_C0805 /X
SC97 1UF/16V /X
GND
reserve for NO-SIO DSW
S_DPWROK Sequence
+3VSB_ADV
+5VSB_ATX
SR126 1KOhm /X
SR128 8.2KOhm /X
S_DPWROK 17,22
+3VSB_ADV
SR129 100KOhm /X 1%
SQ24 PMBS3904 /X
SR141 100KOhm /X 1%
SQ26 PMBS3904 /X
SR132 30KOHM /X 1%
SC98 10UF/6.3V MBS_C0805 /X
SC99 1UF/16V /X
GND
reserve for NO-SIO DSW
NOT SUPPORT DSW / Support SIO EuP
Power plane
+3VSB
+3VSB_ADV
SR136 1 2 0Ohm
MBS_R0603
17,22,65 S_SUSWARN# S_SUSWARN# 1 SR138 0Ohm 2 S_SUSACK# S_SUSACK# 17,22
17,22 S_RSMRST# S_RSMRST# 1 SR140 0Ohm 2 S_DPWROK S_DPWROK 17,22
S_RSMRST# 17,22
54,73 O_RSMRST# O_RSMRST# 1 SR137 0Ohm 2 O_RSMRST#_R
+5VSB_ATX
+5VSB_ATX
+5VSB_ATX
SR159 8.2KOhm /X
SR160 8.2KOhm /X
SR161 8.2KOhm /X
S_SLP_SUS
O_SLPSUSFET
O_SLPSUSFET
O_DEEP_S5 54,65
SR158 8.2KOhm /X
17,65 S_SLP_SUS#
SQ28 PMBS3904 /X
SQ29 PMBS3904 /X
O_RSMRST#_R
SR224 1KOhm /X
SQ30 PMBS3904 /X
SC107 10UF/6.3V MBS_C0805 /X
GND
follow TPE VC to delay 5second
SUPPORT DSW
Power plane
+3VSB_ATX
+3VSB_ADV
SR139 1 /X 2 0Ohm
MBS_R0603
17,22 S_SUSACK# SR146 1 /X 0Ohm 2 O_SUSACK# 54
54 O_DPWROK SR259 1 /X 0Ohm 2 S_DPWROK S_DPWROK 17,22
delete for SIO not support DSW
+5V_USB_PS2
+5VDUAL
+5VSB_ATX
+3VSB_ADV
SR212 8.2KOhm /X
SR213 8.2KOhm /X
SR156 8.2KOhm /X
SR157 8.2KOhm /X
S_SUSACK# 17,22
SQ31 PMBS3904 /X
SR134 100KOhm 1% /X
SQ34 PMBS3904 /X
SR135 1KOhm /X
SC101 1UF/16V MBS_C0603 /X
SR144 0Ohm /X
S_USBPW_SW#
>> P_5V_USB_Q1_10
connect to USB POWER
+5VSB_ATX
+5VSB_ATX
SR218 8.2KOhm /X
SR217 8.2KOhm /X
O_SUS_WARN_5DUAL >>
SR214 0Ohm /X
S_USBPW_SW#
SR133 8.2KOhm /X
SQ33 PMBS3904 /X
17,22,65 S_SUSWARN#
SR219 8.2KOhm /X
SQ32 PMBS3904 /X
SC100 1UF/16V MBS_C0603 /X
GND
<Variant Name>
Title : LYNC-10(DSW)
ASUSTek COMPUTER INC.
Engineer: <OrgAddr1>
Size A3
Project Name IMBM-H81C
Rev 1.00
Date: Tuesday, October 31, 2017
Sheet 22 of 78

SMbus ISOLATION

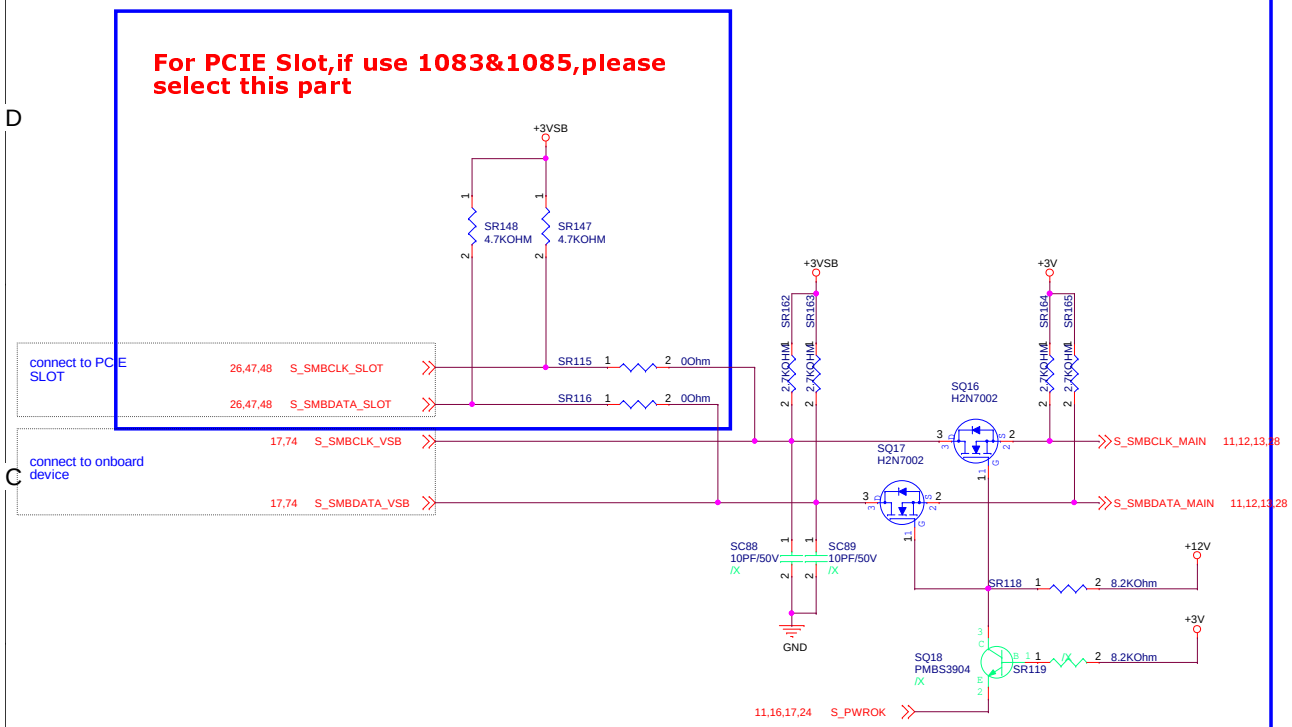

For EPU Power-saving mode

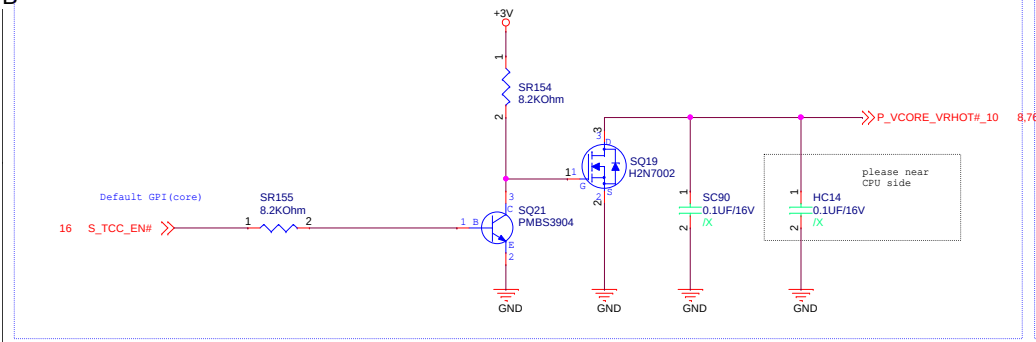

Change the buffer type to open drain

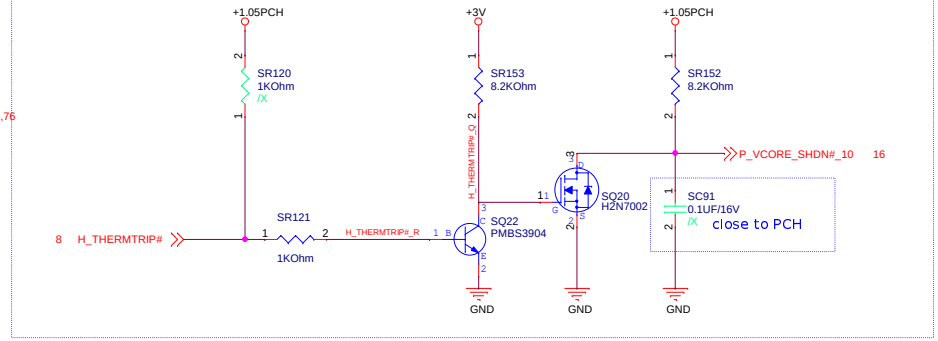

ASUS / ASUSTEK COMPUTER INC	Title : LYNX-9(other)	
	Engineer: <OrgAddr1>	
Size A3	Project Name IMBM-H81C	Rev 1.00
Date: Tuesday, October 31, 2017	Sheet 23 of 78	

SYSPWROK

RC Delay for PCH's PWROK high to PLTRST# de-assertion >99ms (Ian)

/FB stuff

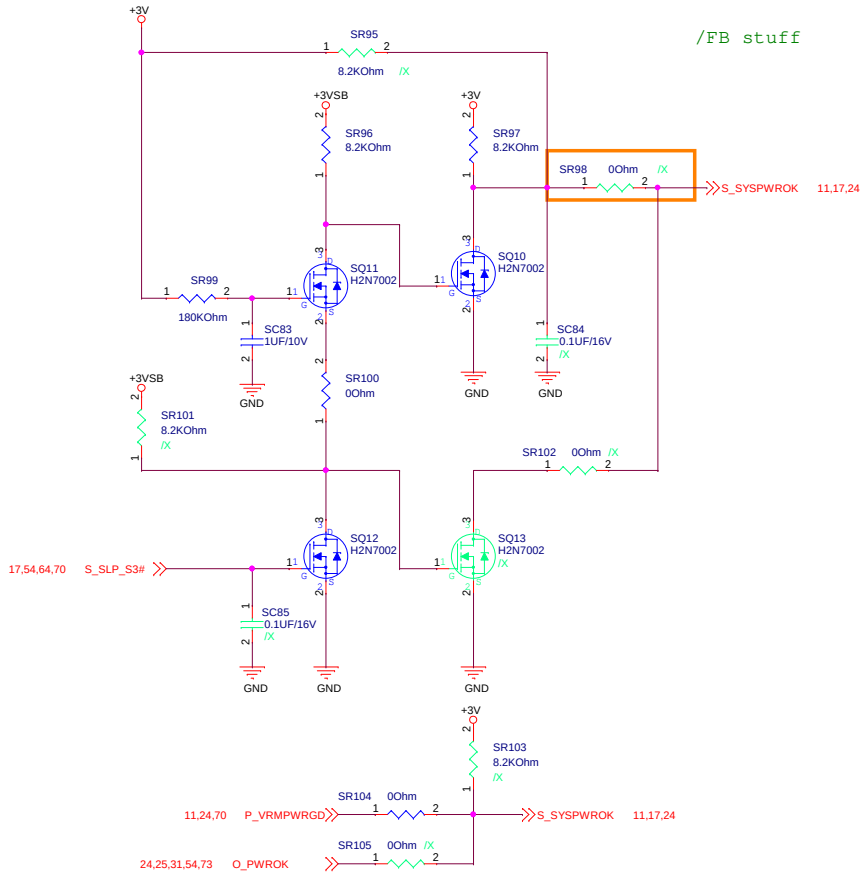

PWROK

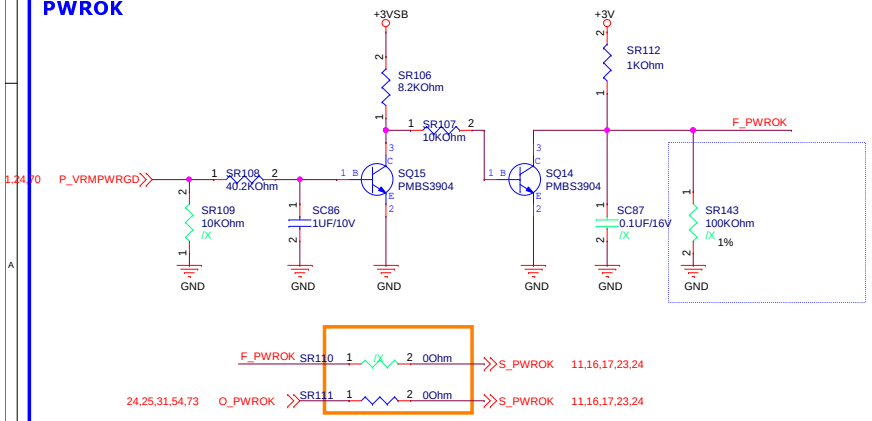

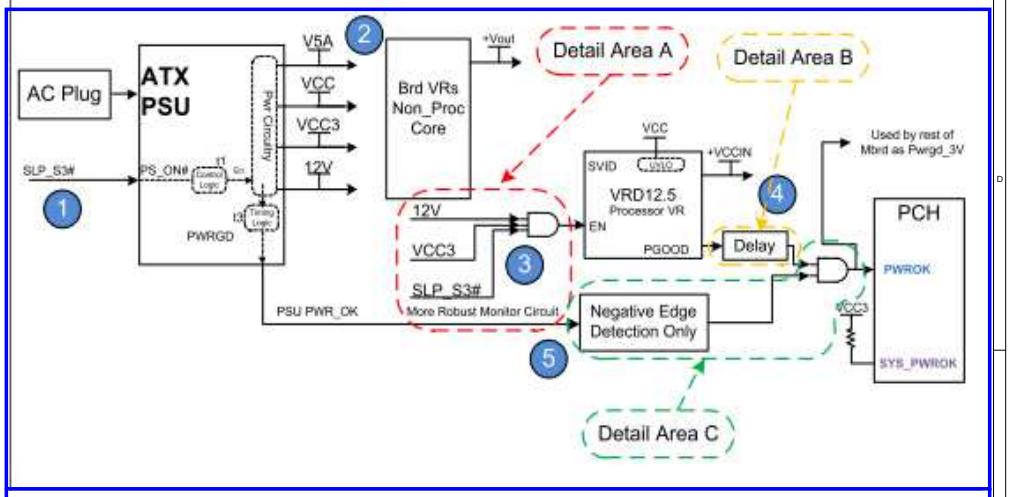

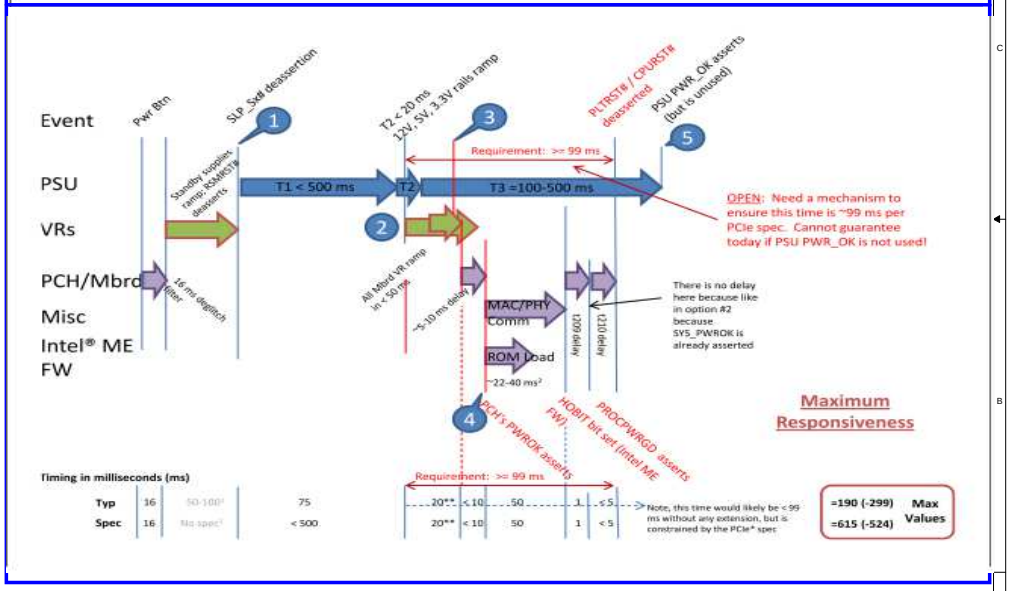

Fast Boot unused

SATA HDD lose issue
700W power supply of AcBel PC7063

ASUS / ASUSTEK COMPUTER INC	Title : LYNX-8(FAST BOOT)		
	Engineer: <OrgAddr1>		
Size A3	Project Name IMBM-H81C		Rev 1.00
Date: Tuesday, October 31, 2017	Sheet 24 of 78		

SPI Interface

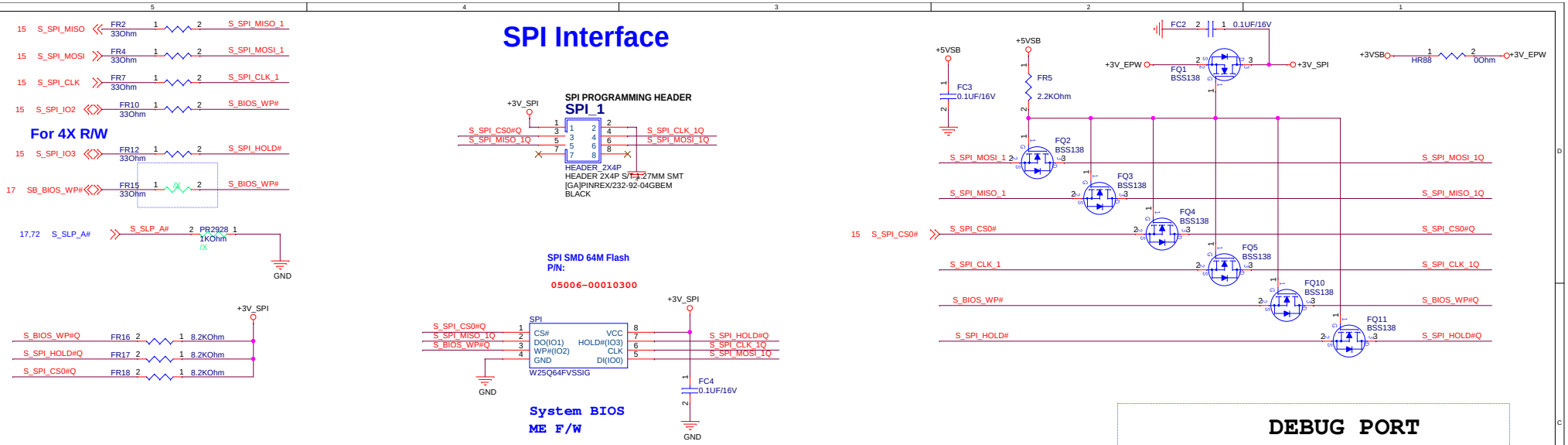

DEBUG PORT

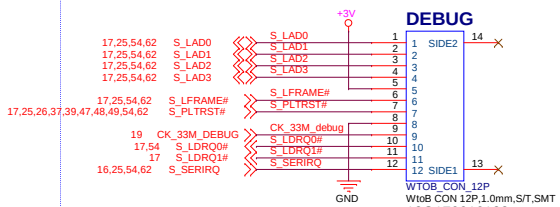

TPM

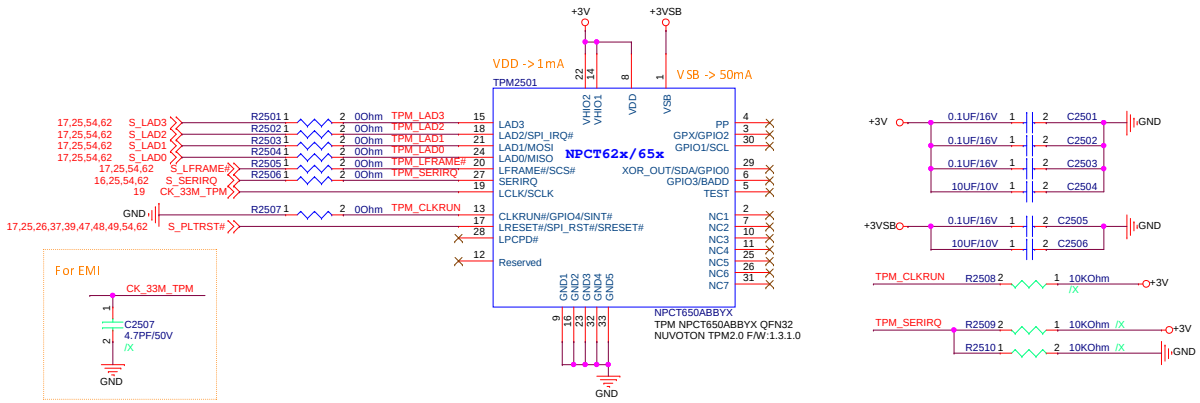

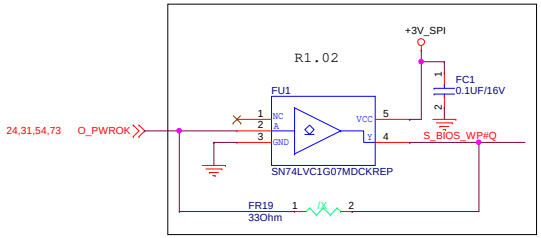

<Variant Name>

ASUSTek COMPUTER INC.	Title : TPM/SPI/Debug Port	
	Engineer: <OrgAddr1>	
Size: Custom	Project Name: IMBM-H81C	Rev: 1.00
Date: Tuesday, October 31, 2017	Sheet 25 of 78	

change name to PCIEX16 When no PCIEX16_2

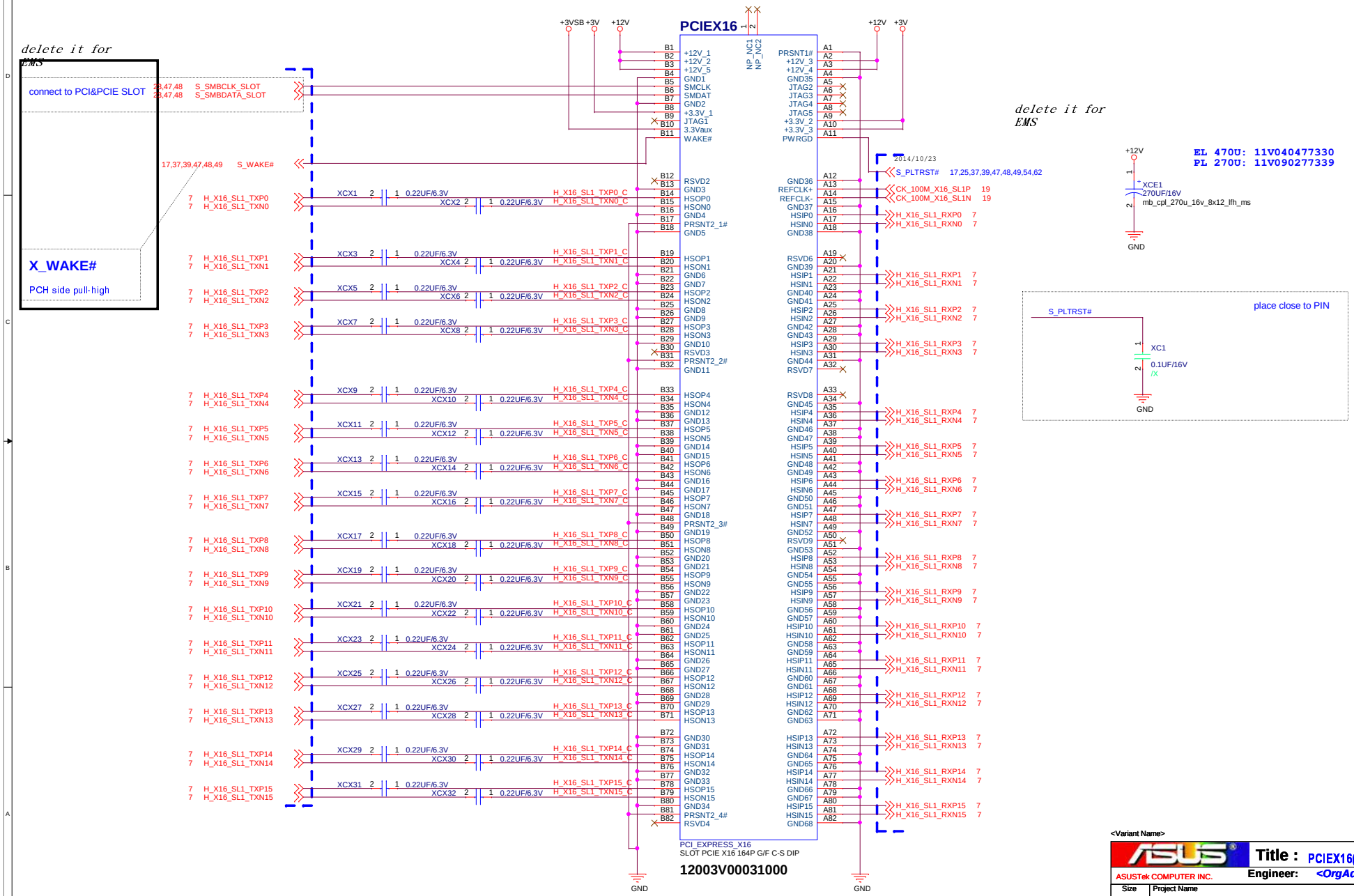

<Variant Name>

ASUS	Title : PCIEX16(Gen3)	
ASUSTek COMPUTER INC.	Engineer: <OrgAddr1>	
Size A3	Project Name IMBM-H81C	Rev 1.00
Date: Tuesday, October 31, 2017	Sheet 26 of 78	

POWER for HDMI & DVI

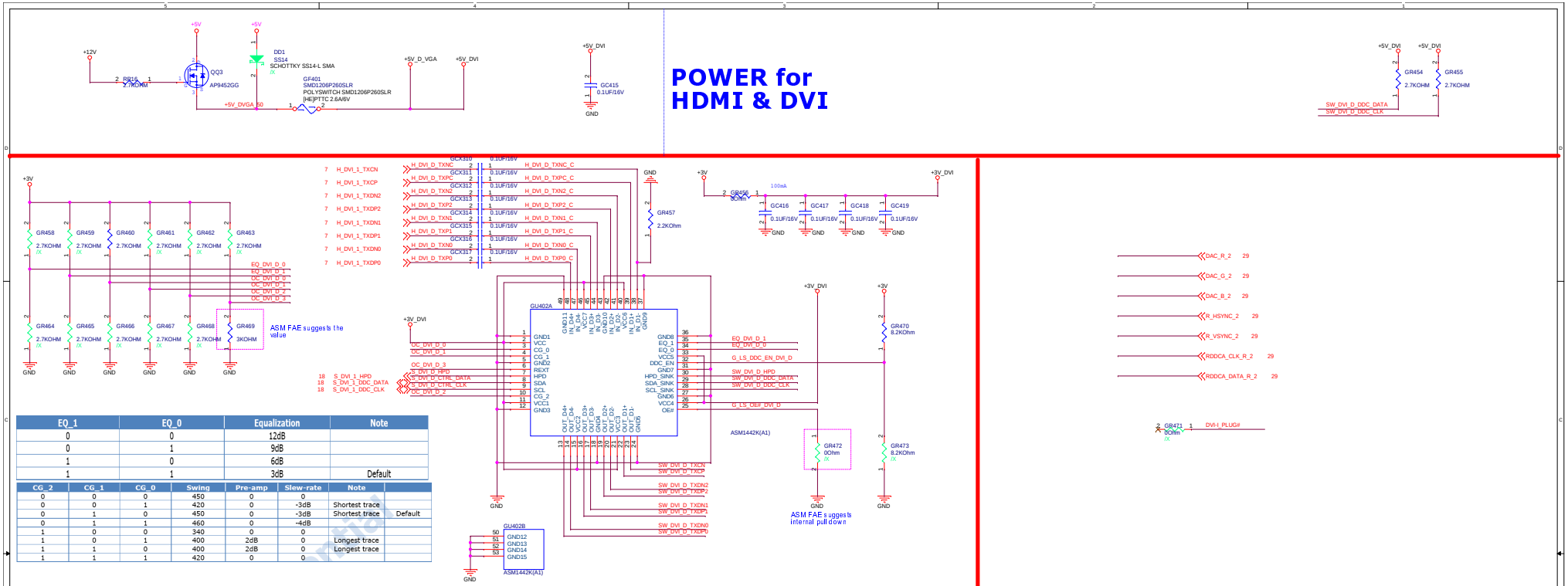

EQ_1	EQ_0	Equalization	Note
0	0	12dB	
0	1	9dB	
1	0	6dB	
1	1	3dB	Default

CG_2	CG_1	CG_0	Swing	Pre-amp	Slew-rate	Note	
0	0	0	450	0	0		
0	0	1	420	0	-3dB	Shortest trace	
0	1	0	450	0	-3dB	Shortest trace	Default
0	1	1	460	0	-4dB		
1	0	0	340	0	0		
1	0	1	400	2dB	0	Longest trace	
1	1	0	400	2dB	0	Longest trace	
1	1	1	420	0	0		

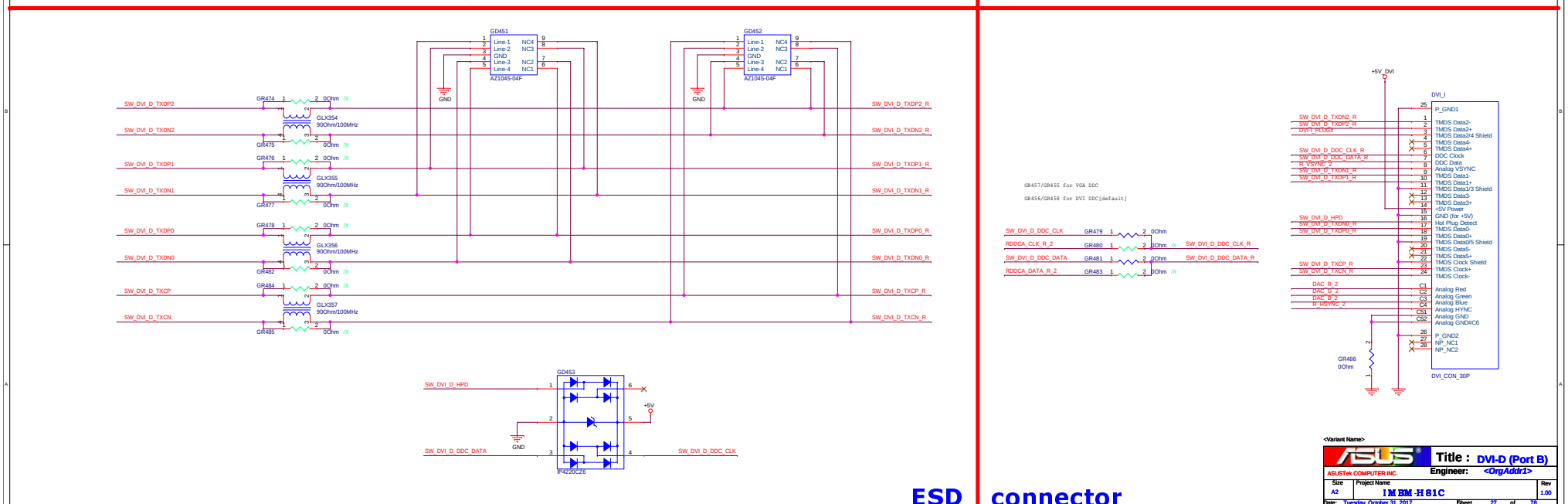

ESD connector

<Variant Name>

ASUSTek COMPUTER INC.

Title : DVI-D (Port B)

Engineer: <OrgAddr1>

Size	Project Name	Rev
A2	IMB M-H81C	1.00

Date: Tuesday, October 31, 2017 Sheet 27 of 78

RTD2168 Power Caps and Beads

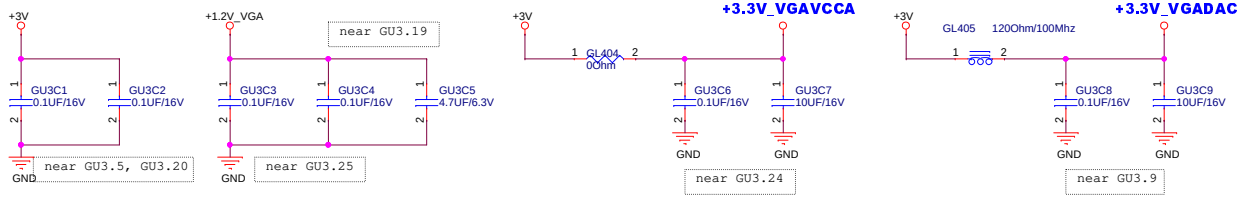

Hot-Plug Detect

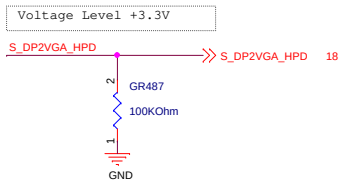

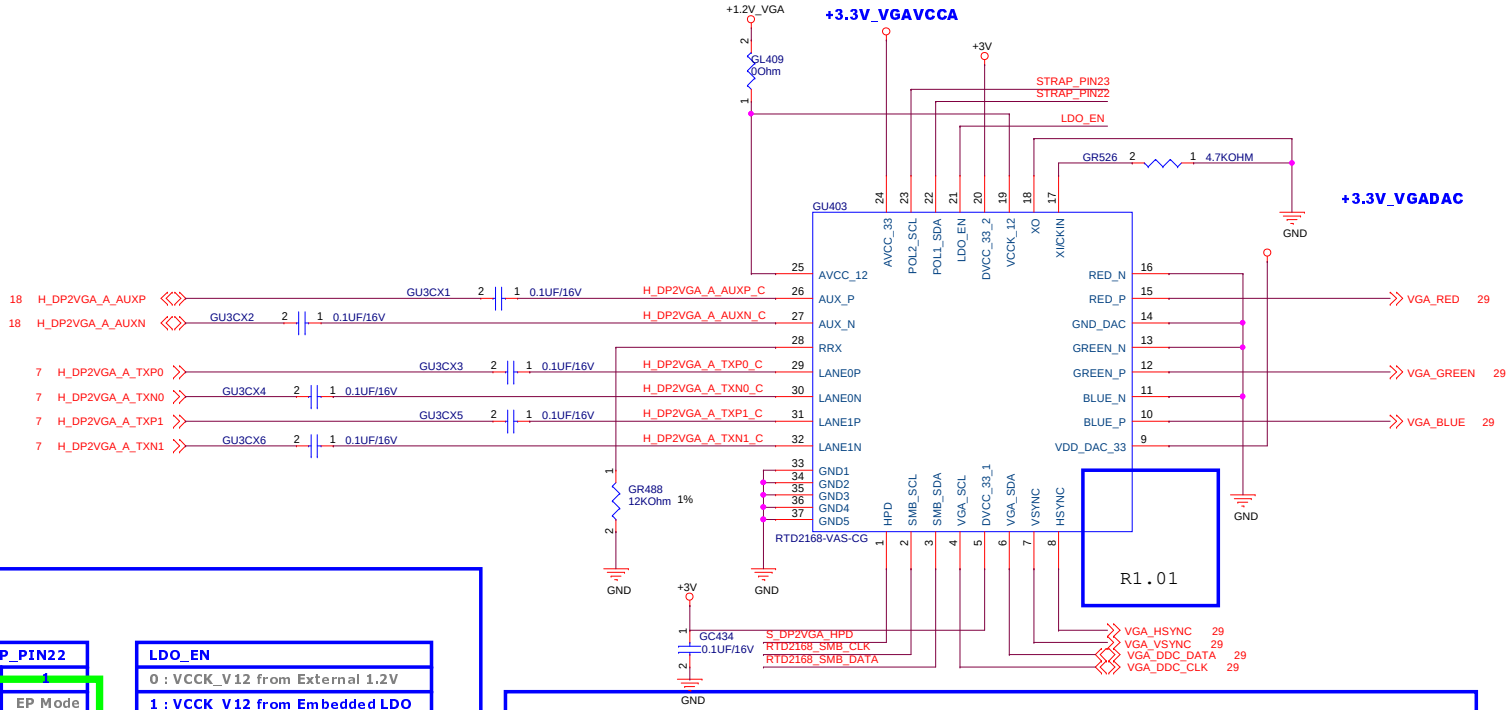

Strapping Pin

		STRAP_PIN22	
		0	1
STRAP_PIN23	0	X	EP Mode
	1	ROM	EEPROM

LDO_EN
0 : VCCK_V12 from External 1.2V
1 : VCCK_V12 from Embedded LDO

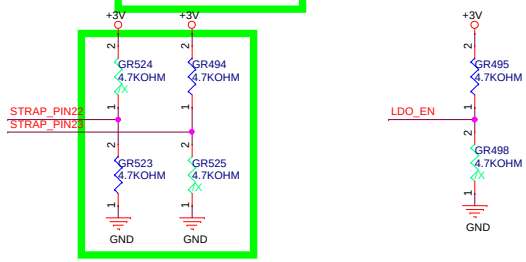

SMBus Programming

RTD2168 Slave Address : 0x64/0x65 and 0x68/0x69

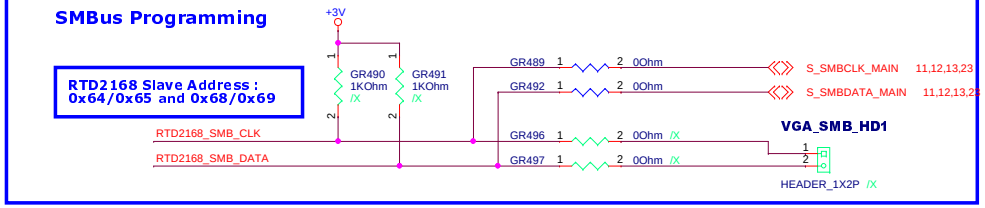

<Variant Name>

ASUSTeK COMPUTER INC	Title : DP to VGA_RTD2168	
	Engineer: <OrgAddr1>	
Size A3	Project Name IMBM-H81C	Rev 1.00
Date: Tuesday, October 31, 2017	Sheet 28 of 78	

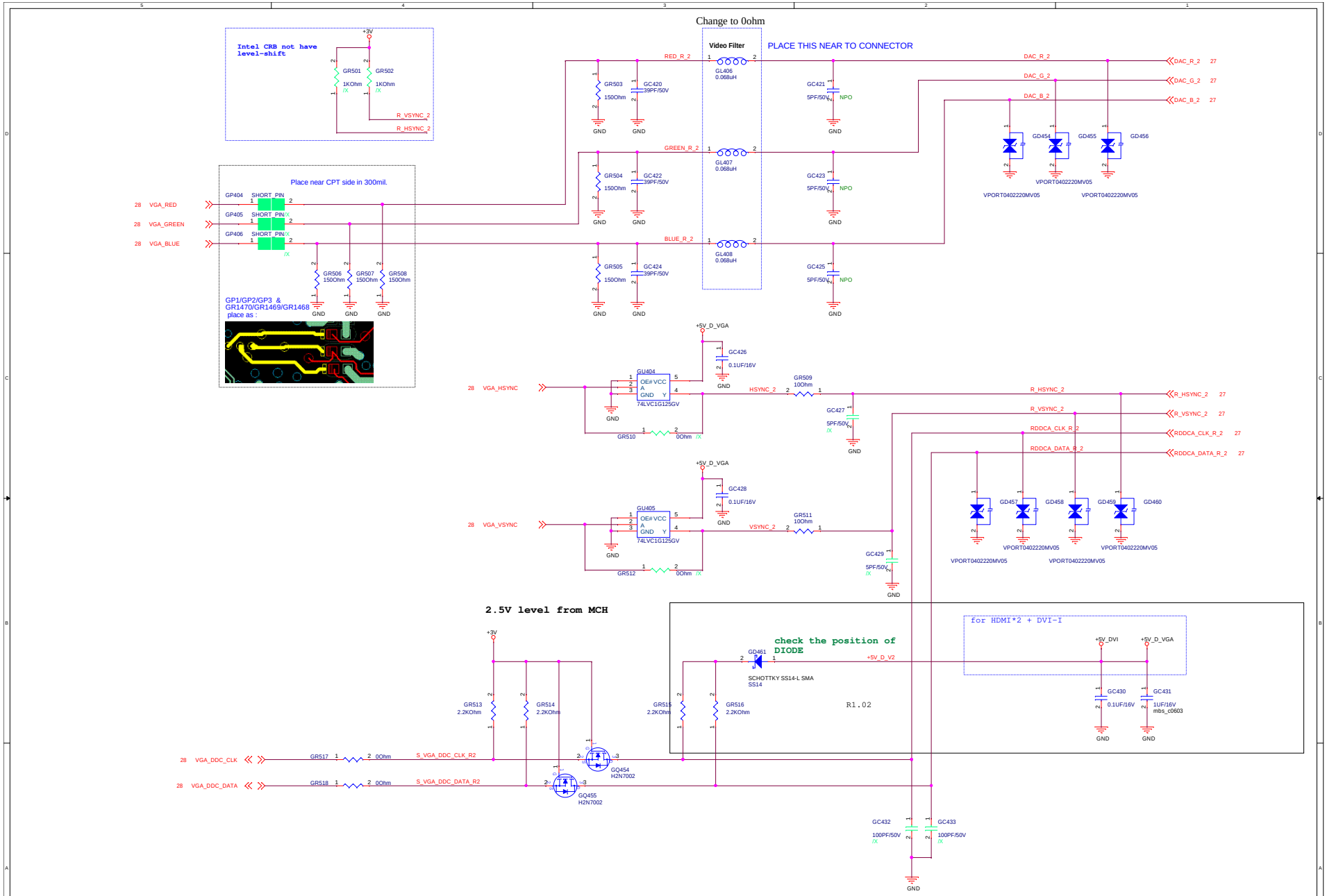

<Variant Name>

ASUSTeK COMPUTER INC.

Title : VGA

Engineer: <OrgAddr1>

Size	Project Name	Rev
C	IMBM-H81C	1.00

Date: Tuesday, October 31, 2017 Sheet 29 of 78

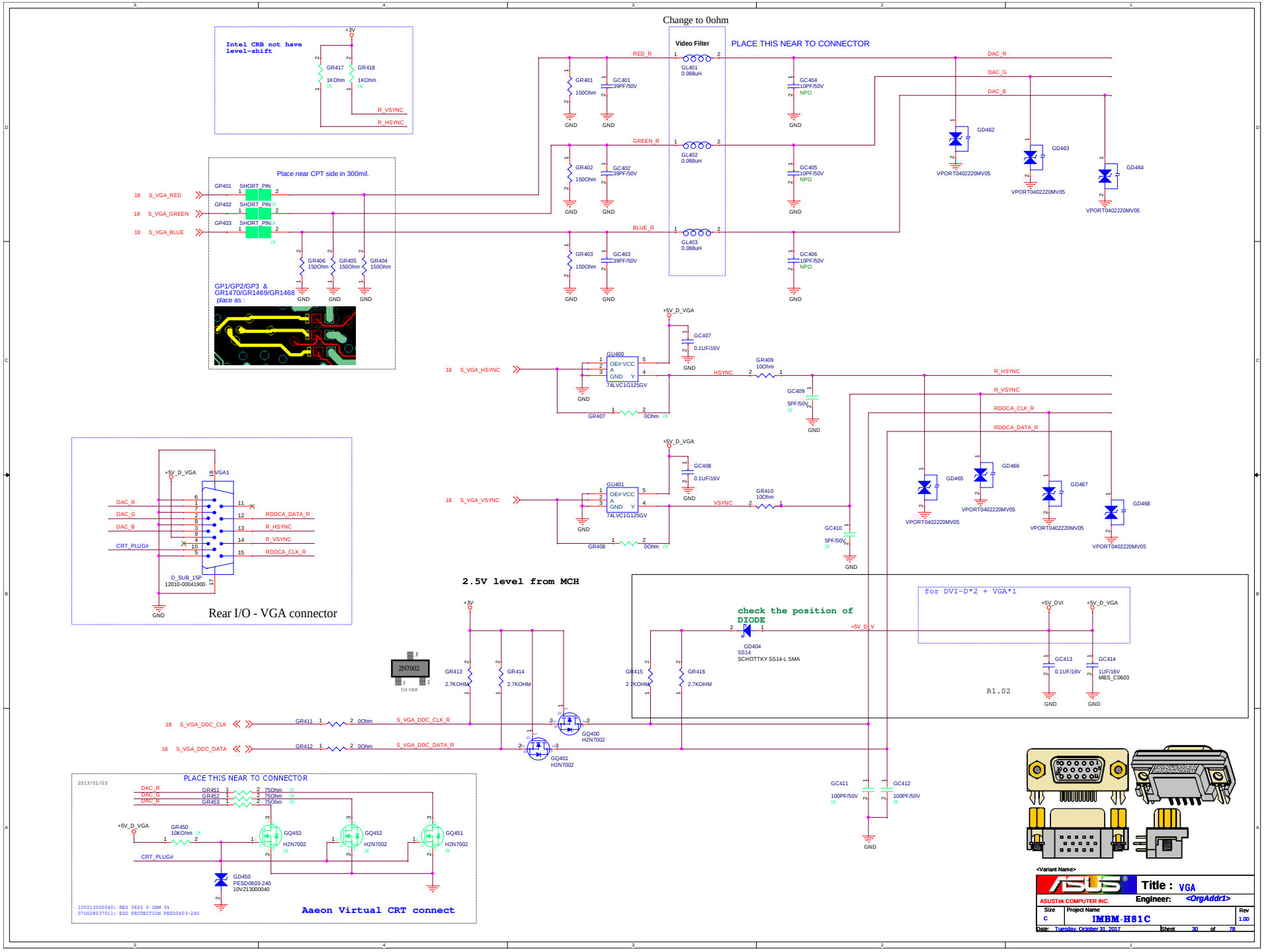
Change to 0ohm
Intel CRB not have level-shift
+3V
GR417 1KOhm /X
GR418 1KOhm /X
R_VSYNC
R_HSYNC
Video Filter
PLACE THIS NEAR TO CONNECTOR
RED_R
GREEN_R
BLUE_R
GL401 0.068uH
GL402 0.068uH
GL403 0.068uH
GR401 150Ohm
GC401 39PF/50V
GR402 150Ohm
GC402 39PF/50V
GR403 150Ohm
GC403 39PF/50V
GC404 10PF/50V NPO
GC405 10PF/50V NPO
GC406 10PF/50V NPO
GND
DAC_R
DAC_G
DAC_B
GD462
GD463
GD464
VPORT0402220MV05
Place near CPT side in 300mil.
GP401 SHORT_PIN
GP402 SHORT_PIN /X
GP403 SHORT_PIN /X
18 S_VGA_RED
18 S_VGA_GREEN
18 S_VGA_BLUE
GR406 150Ohm
GR405 150Ohm
GR404 150Ohm
GP1/GP2/GP3 & GR1470/GR1469/GR1468 place as :
+5V_D_VGA
GC407 0.1UF/16V
GU400
OE# VCC
A
GND Y
74LVC1G125GV
18 S_VGA_HSYNC
HSYNC
GR409 10Ohm
GC409 5PF/50V /X
GR407 0Ohm /X
R_HSYNC
R_VSYNC
RDDCA_CLK_R
RDDCA_DATA_R
GC408 0.1UF/16V
GU401
18 S_VGA_VSYNC
VSYNC
GR410 10Ohm
GC410 5PF/50V /X
GR408 0Ohm /X
GD465
GD466
GD467
GD468
VGA1
DAC_R
DAC_G
DAC_B
CRT_PLUG#
RDDCA_DATA_R
R_HSYNC
R_VSYNC
RDDCA_CLK_R
D_SUB_15P
12010-00041900
Rear I/O - VGA connector
2.5V level from MCH
2N7002
TOP VIEW
GR413 2.7KOHM
GR414 2.7KOHM
GR415 2.7KOHM
GR416 2.7KOHM
check the position of DIODE
GD404
SS14
SCHOTTKY SS14-L SMA
+5V_D_V
for DVI-D*2 + VGA*1
+5V_DVI
+5V_D_VGA
GC413 0.1UF/16V
GC414 1UF/16V MBS_C0603
R1.02
18 S_VGA_DDC_CLK
18 S_VGA_DDC_DATA
GR411 0Ohm
GR412 0Ohm
S_VGA_DDC_CLK_R
S_VGA_DDC_DATA_R
GQ400 H2N7002
GQ401 H2N7002
GC411 100PF/50V /X
GC412 100PF/50V /X
2013/01/03
PLACE THIS NEAR TO CONNECTOR
GR451 75Ohm /X
GR452 75Ohm /X
GR453 75Ohm /X
GR450 10KOhm /X
GQ453 H2N7002
GQ452 H2N7002
GQ451 H2N7002
GD450 PESD0603-240 10V213000040
10V213000040: RES 0603 0 OHM 5%
07G028037011: ESD PROTECTION PESD0603-240
Aaeon Virtual CRT connect
<Variant Name>
ASUSTeK COMPUTER INC.
Title : VGA
Engineer: <OrgAddr1>
Size C
Project Name IMBM-H81C
Rev 1.00
Date: Tuesday, October 31, 2017
Sheet 30 of 78

+5VSB_USBKB VOLTAGE & POWER CIRCUIT

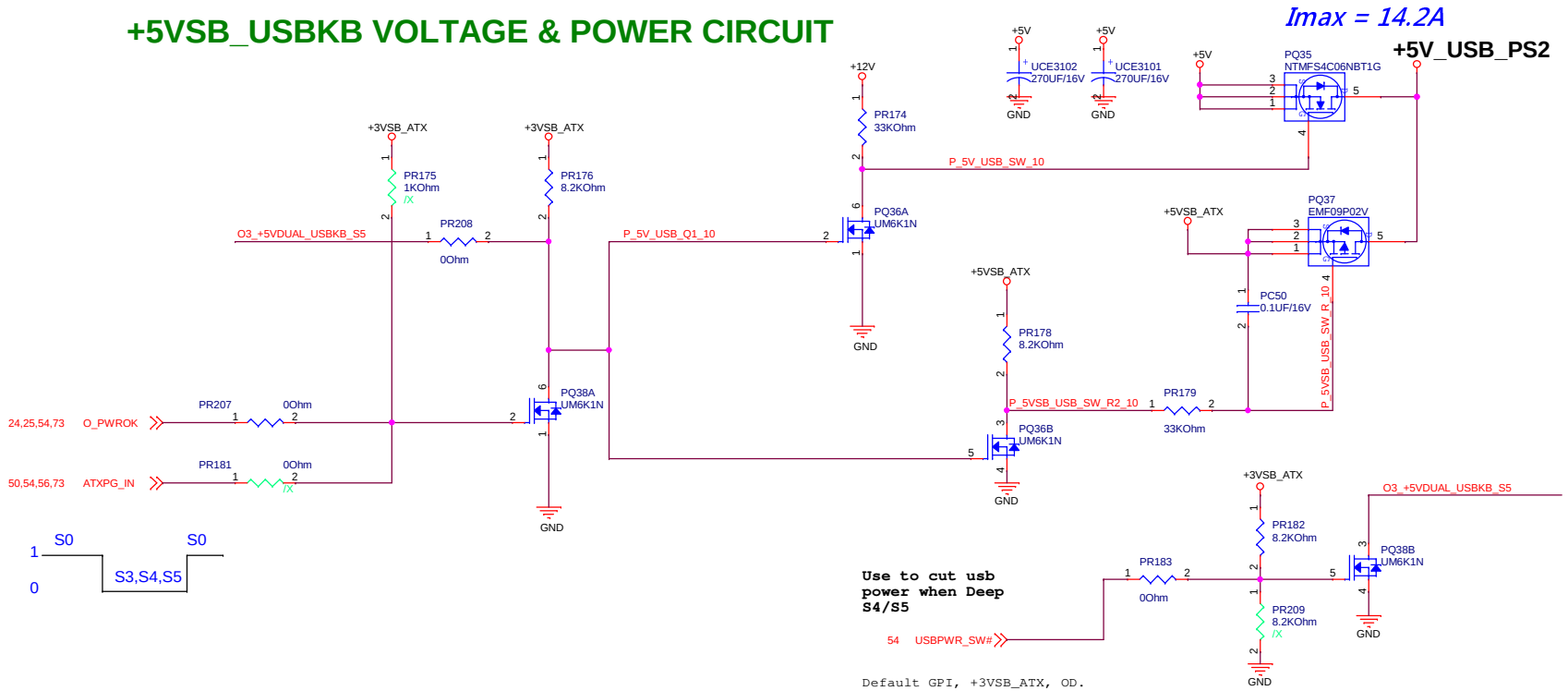

IMBM-Q87C

ASUS	Title : +5V_USB_PS2	
ASUSTEK COMPUTER INC	Engineer: <OrgAddr1>	
Size: Custom	Project Name: IMBM-H81C	Rev: 1.00
Date: Tuesday, October 31, 2017	Sheet 31 of 78	

Title : Empty		
ASUSTeK COMPUTER INC.	Engineer: <OrgAddr1>	
Size: A	Project Name: IMBM-H81C	Rev: 1.00
Date: Tuesday, October 31, 2017	Sheet 32 of 78	

5 4 3 2 1

D C B A

Title : Empty		
ASUSTeK COMPUTER INC.	Engineer: <OrgAddr1>	
Size: A	Project Name: IMBM-H81C	Rev: 1.00
Date: Tuesday, October 31, 2017	Sheet 34 of 78	

Title : Empty		
ASUSTeK COMPUTER INC.	Engineer: <OrgAddr1>	
Size: A	Project Name: IMBM-H81C	Rev: 1.00
Date: Tuesday, October 31, 2017	Sheet 35 of 78	

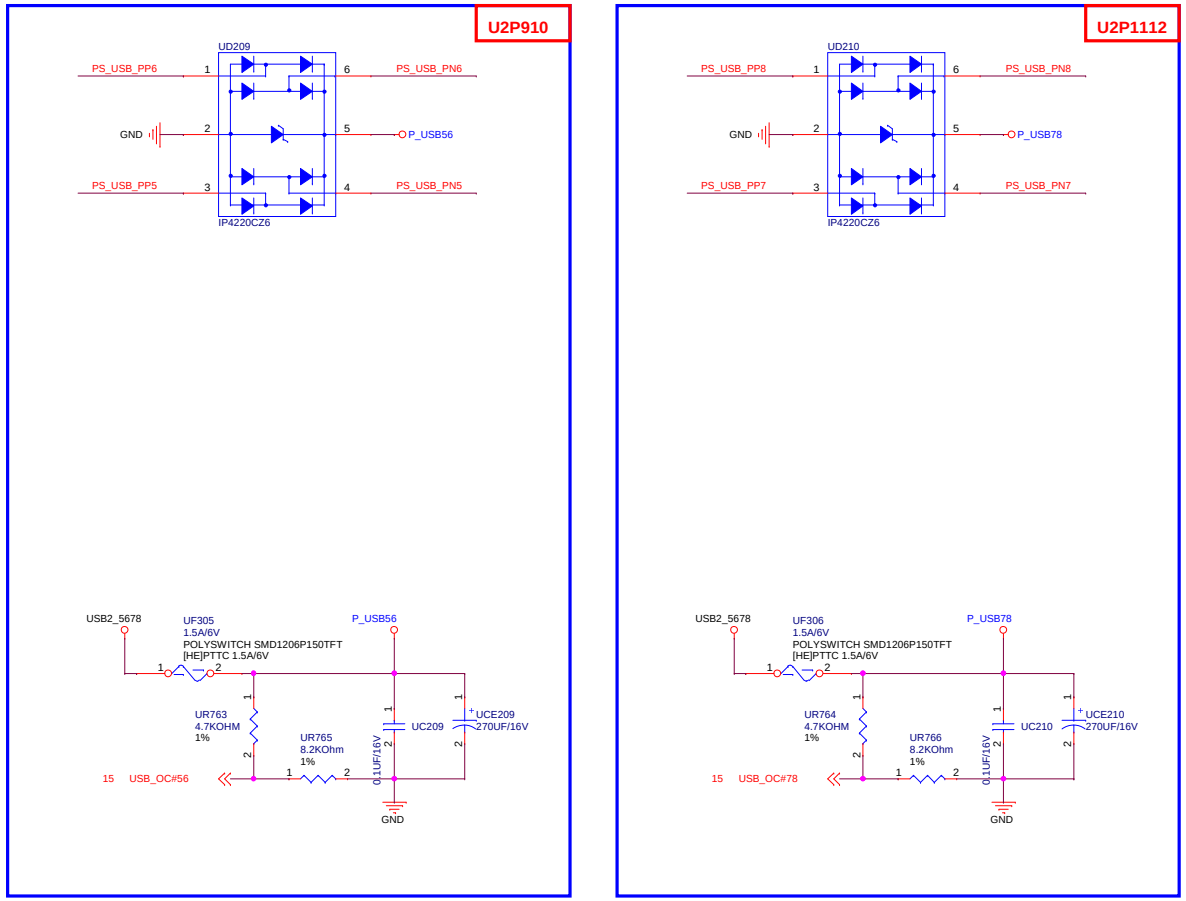

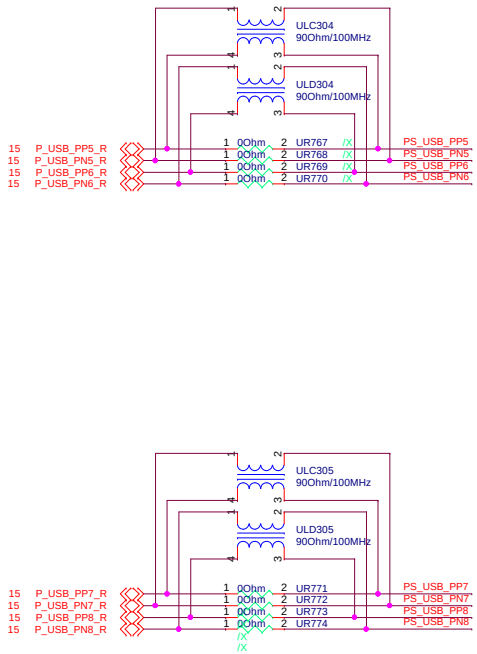

USB power group C

Imax =3.2A

USB2_5678

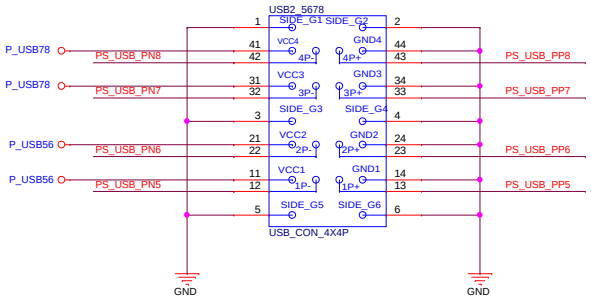

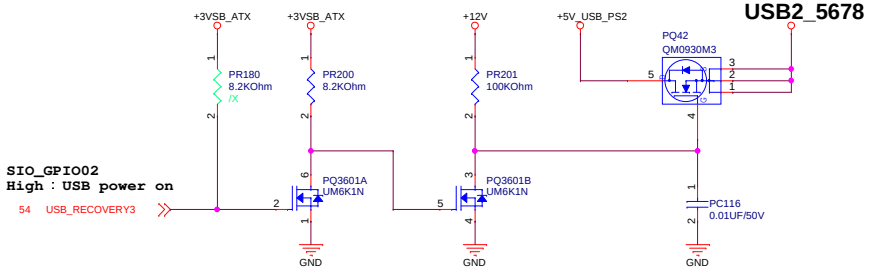

EMB-BSW1

ASUSTek COMPUTER INC.	Title : USB2 Ports *4	
	Engineer: <OrgAddr1>	
Size: Custom	Project Name: IMBM-H81C	Rev: 1.00
Date: Tuesday, October 31, 2017	Sheet 36 of 78	

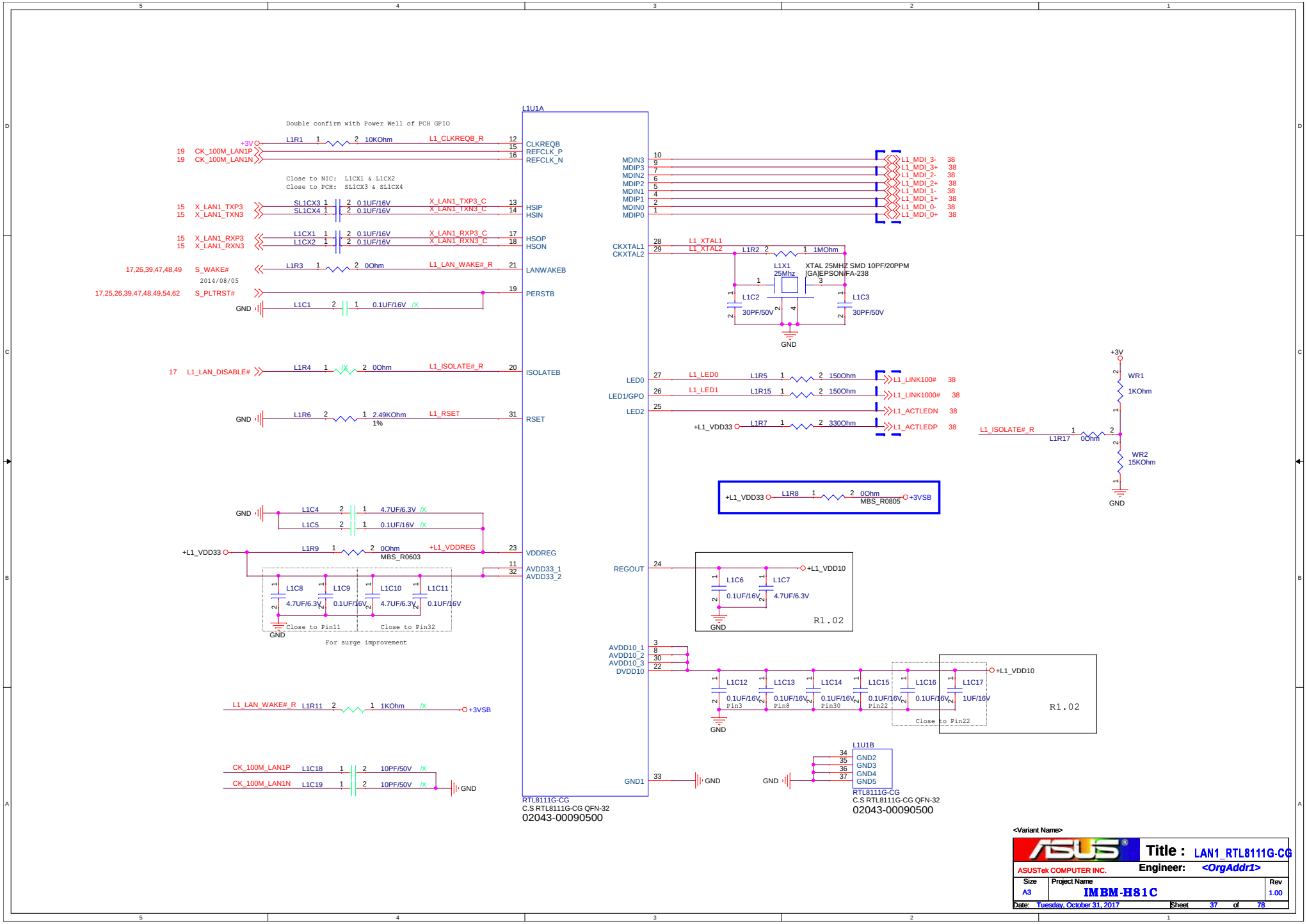

<Variant Name>

ASUS	Title : LAN1_RTL8111G-CG	
ASUSTek COMPUTER INC.	Engineer: <OrgAddr1>	
Size: A3	Project Name: IMBM-H81C	Rev: 1.00
Date: Tuesday, October 31, 2017	Sheet 37 of 78	

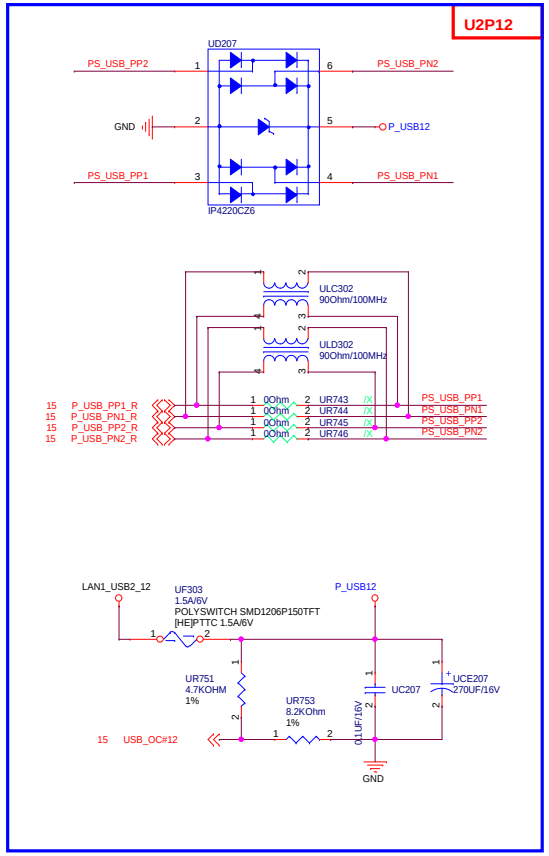

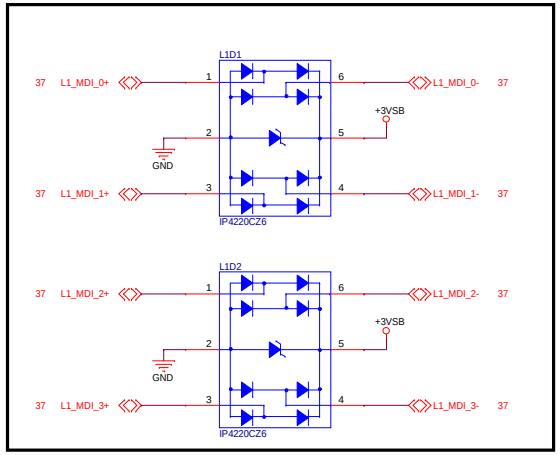

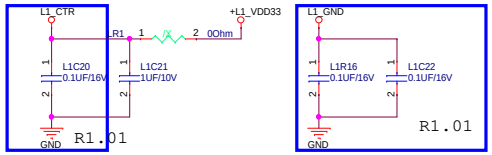

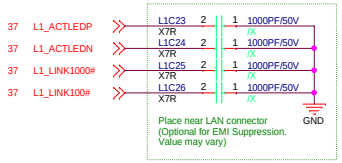

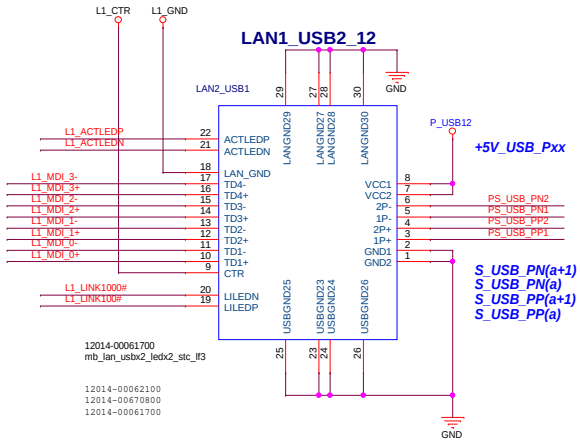

L1D3,L1D4 colay,L1D5,L1D6 colay.

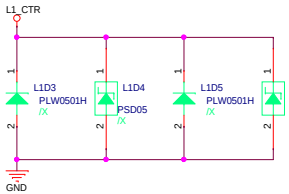

USB power group D

Imax =1.6A

LAN1_USB2_12

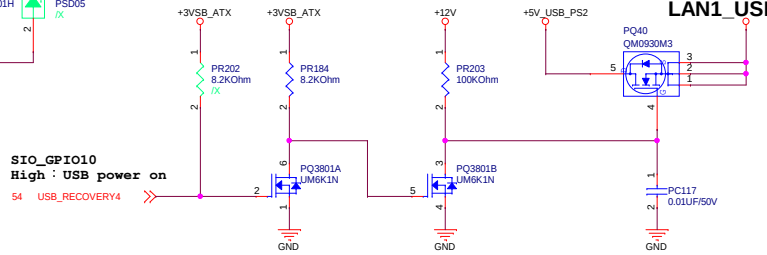

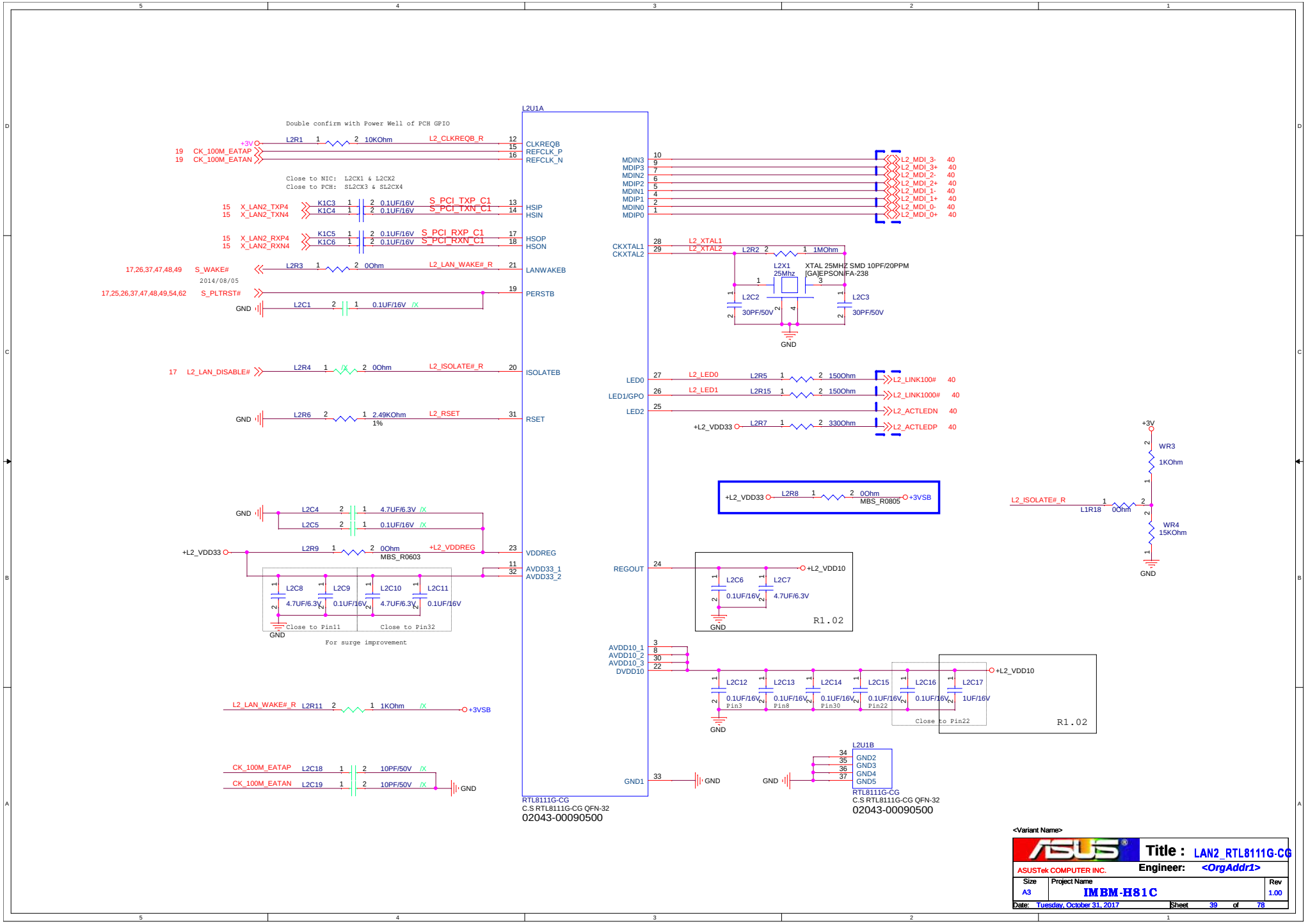

<Variant Name>

ASUS	Title :	LAN2_RTL8111G-CG
ASUSTek COMPUTER INC.	Engineer:	<OrgAddr1>
Size: A3	Project Name: IMBM-H81C	Rev: 1.00
Date: Tuesday, October 31, 2017	Sheet 39 of 78	

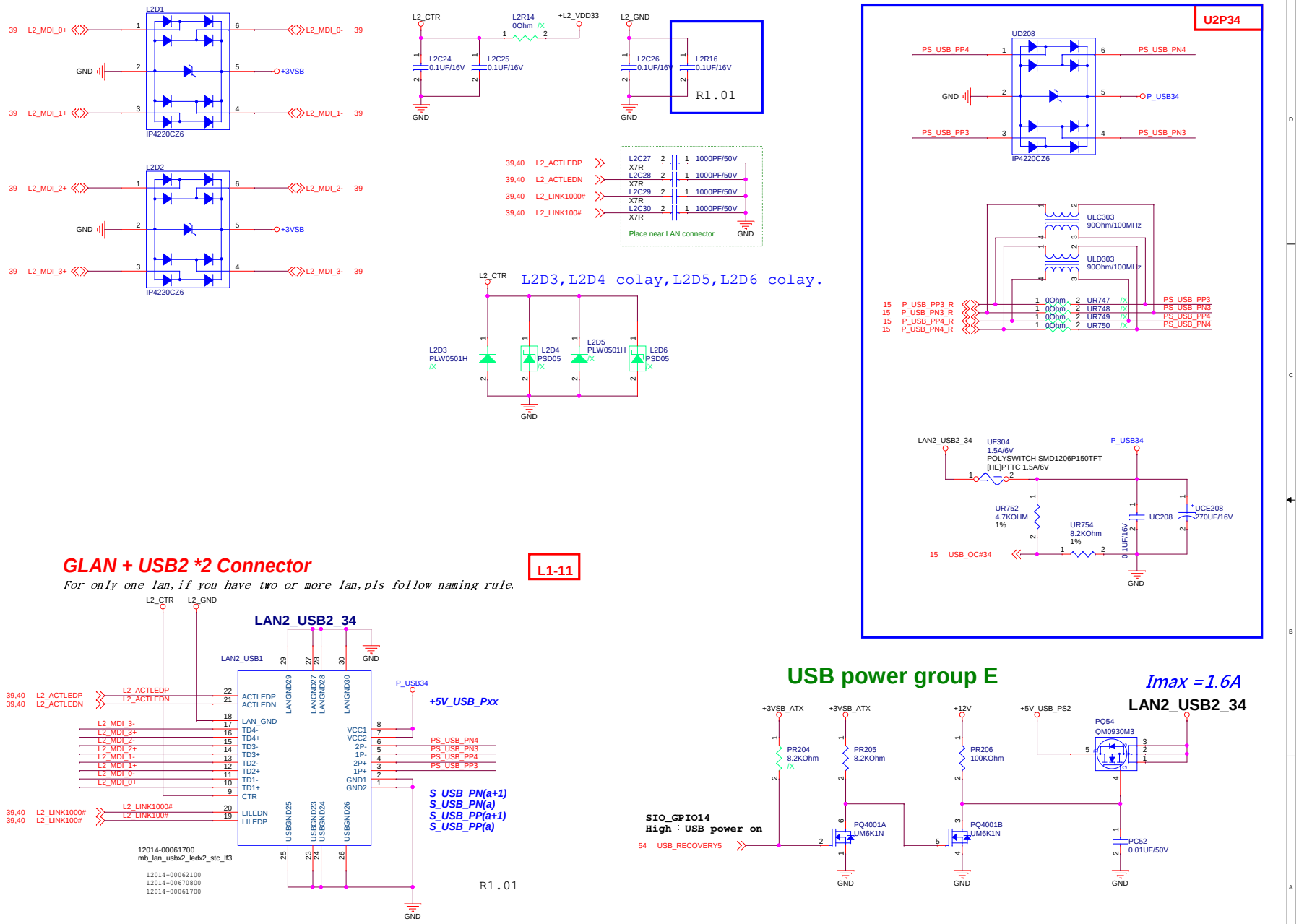
L2D1
39 L2_MDI_0+
39 L2_MDI_1+
GND
+3VSB
L2_MDI_0-
L2_MDI_1-
IP4220CZ6
L2D2
39 L2_MDI_2+
39 L2_MDI_3+
L2_MDI_2-
L2_MDI_3-
L2_CTR
L2R14
0Ohm /X
+L2_VDD33
L2_GND
L2C24
0.1UF/16V
L2C25
0.1UF/16V
L2C26
0.1UF/16V
L2R16
0.1UF/16V
R1.01
39,40 L2_ACTLEDP
39,40 L2_ACTLEDN
39,40 L2_LINK1000#
39,40 L2_LINK100#
L2C27 2 1 1000PF/50V
L2C28 2 1 1000PF/50V
L2C29 2 1 1000PF/50V
L2C30 2 1 1000PF/50V
X7R
Place near LAN connector
L2D3,L2D4 colay,L2D5,L2D6 colay.
L2D3
PLW0501H
/X
L2D4
PSD05
/X
L2D5
PLW0501H
/X
L2D6
PSD05
/X
U2P34
UD208
PS_USB_PP4
PS_USB_PN4
P_USB34
PS_USB_PP3
PS_USB_PN3
IP4220CZ6
ULC303
90Ohm/100MHz
ULD303
90Ohm/100MHz
15 P_USB_PP3_R
15 P_USB_PN3_R
15 P_USB_PP4_R
15 P_USB_PN4_R
1 0Ohm 2 UR747 /X
1 0Ohm 2 UR748 /X
1 0Ohm 2 UR749 /X
1 0Ohm 2 UR750 /X
LAN2_USB2_34
UF304
1.5A/6V
POLYSWITCH SMD1206P150TFT
[HE]PTTC 1.5A/6V
P_USB34
UR752
4.7KOHM
1%
UR754
8.2KOHM
1%
UC208
0.1UF/16V
UCE208
270UF/16V
15 USB_OC#34
GLAN + USB2 *2 Connector
For only one lan,if you have two or more lan,pls follow naming rule.
L1-11
LAN2_USB2_34
L2_CTR
L2_GND
LAN2_USB1
GND
P_USB34
+5V_USB_Pxx
39,40 L2_ACTLEDP
39,40 L2_ACTLEDN
L2_ACTLEDP
L2_ACTLEDN
ACTLEDP
ACTLEDN
LAN_GND
TD4-
TD4+
TD3-
TD3+
TD2-
TD2+
TD1-
TD1+
CTR
LILEDN
LILEDP
VCC1
VCC2
2P-
1P-
2P+
1P+
GND1
GND2
PS_USB_PN4
PS_USB_PN3
PS_USB_PP4
PS_USB_PP3
S_USB_PN(a+1)
S_USB_PN(a)
S_USB_PP(a+1)
S_USB_PP(a)
L2_MDI_3-
L2_MDI_3+
L2_MDI_2-
L2_MDI_2+
L2_MDI_1-
L2_MDI_1+
L2_MDI_0-
L2_MDI_0+
39,40 L2_LINK1000#
39,40 L2_LINK100#
L2_LINK1000#
L2_LINK100#
LANGND29
LANGND27
LANGND28
LANGND30
USBGND25
USBGND23
USBGND24
USBGND26
12014-00061700
mb_lan_usbx2_ledx2_stc_lf3
12014-00062100
12014-00670800
12014-00061700
R1.01
USB power group E
Imax =1.6A
LAN2_USB2_34
+3VSB_ATX
+12V
+5V_USB_PS2
PR204
8.2KOHM
/X
PR205
8.2KOHM
PR206
100KOHM
PQ54
QM0930M3
SIO_GPIO14
High : USB power on
54 USB_RECOVERY5
PQ4001A
UM6K1N
PQ4001B
UM6K1N
PC52
0.01UF/50V
GND
<Variant Name>
ASUSTek COMPUTER INC.
Title : LAN2_RJ45
Engineer: <OrgAddr1>
Size Custom
Project Name IMBM-H81C
Rev 1.00
Date: Tuesday, October 31, 2017
Sheet 40 of 78

New Color

SATA 6G:	12015V00060900	Cornsilk
SATA 3G:	12015V00060800	Turkish-Coffee

Old Color

SATA 6G:	12V702200A00	LIGHT GRAY
SATA 3G:	12V702200L00	LIGHT BLUE

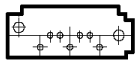

顏色：Turkish-Coffee
It connects with chipset.
(Full function are supported)

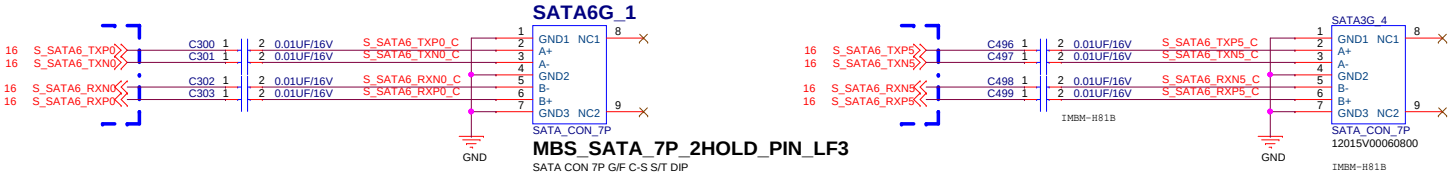

MBS_SATA_7P_2HOLD_PIN_LF3

SATA CON 7P G/F C-S S/T DIP

12015V00060900

MBS_SATA_7P_2HOLD_PIN_LF3

SATA CON 7P G/F C-S S/T DIP

12015V00060900

<Variant Name>

ASUS	Title : SATA3 Ports *6	
ASUSTek COMPUTER INC.	Engineer: <OrgAddr1>	
Size: A3	Project Name: IMBM-H81C	Rev: 1.00
Date: Tuesday, October 31, 2017	Sheet 41 of 78	

Co-Lay ALC886/ALC892

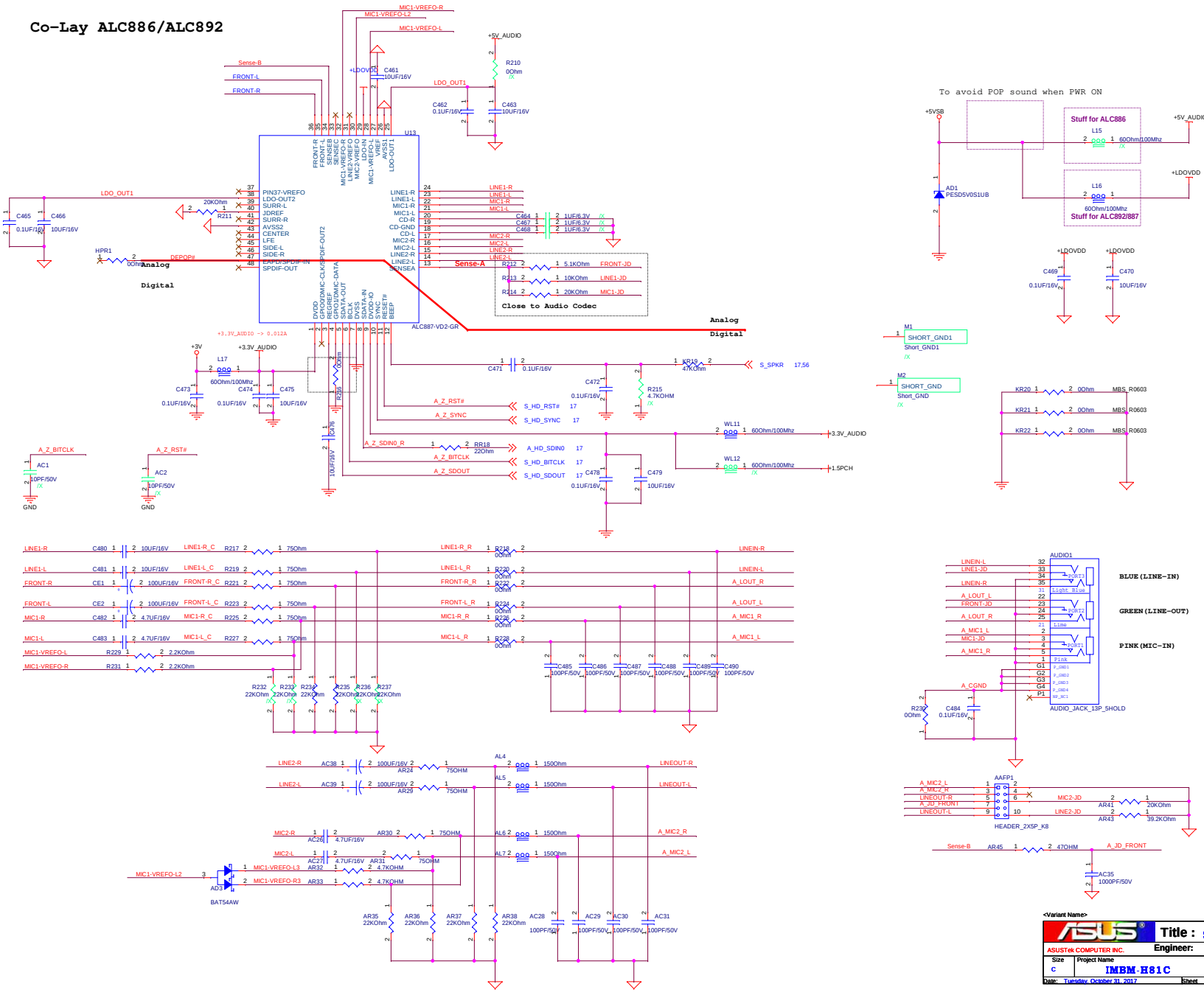

ASUSTeK COMPUTER INC.	Title : USB_RECOVERY		
	Engineer: <OrgAddr1>		
Size B	Project Name IMBM-H81C		Rev 1.00
Date: Tuesday, October 31, 2017		Sheet 43 of 78	

EM8-BSW1

ASUSTek COMPUTER INC.	Title : ASM1184e	
	Engineer: <OrgAddr1>	
Size A2	Project Name IMBM-H81C	Rev 1.00
Date: Tuesday, October 31, 2017	Sheet 44 of 78	

0.5A

EMB-BSW1

Title :

ASUSTek COMPUTER INC.

Engineer:

Size	Project Name	Rev
A3	IMBM-H81C	1.00

Date: Tuesday, October 31, 2017 Sheet 45 of 78

EMB-BSW1

ASUSTek COMPUTER INC.	Title : Empty	
	Engineer: <OrgAddr1>	
Size: Custom	Project Name: IMBM-H81C	Rev: 1.00
Date: Tuesday, October 31, 2017	Sheet 46 of 78	

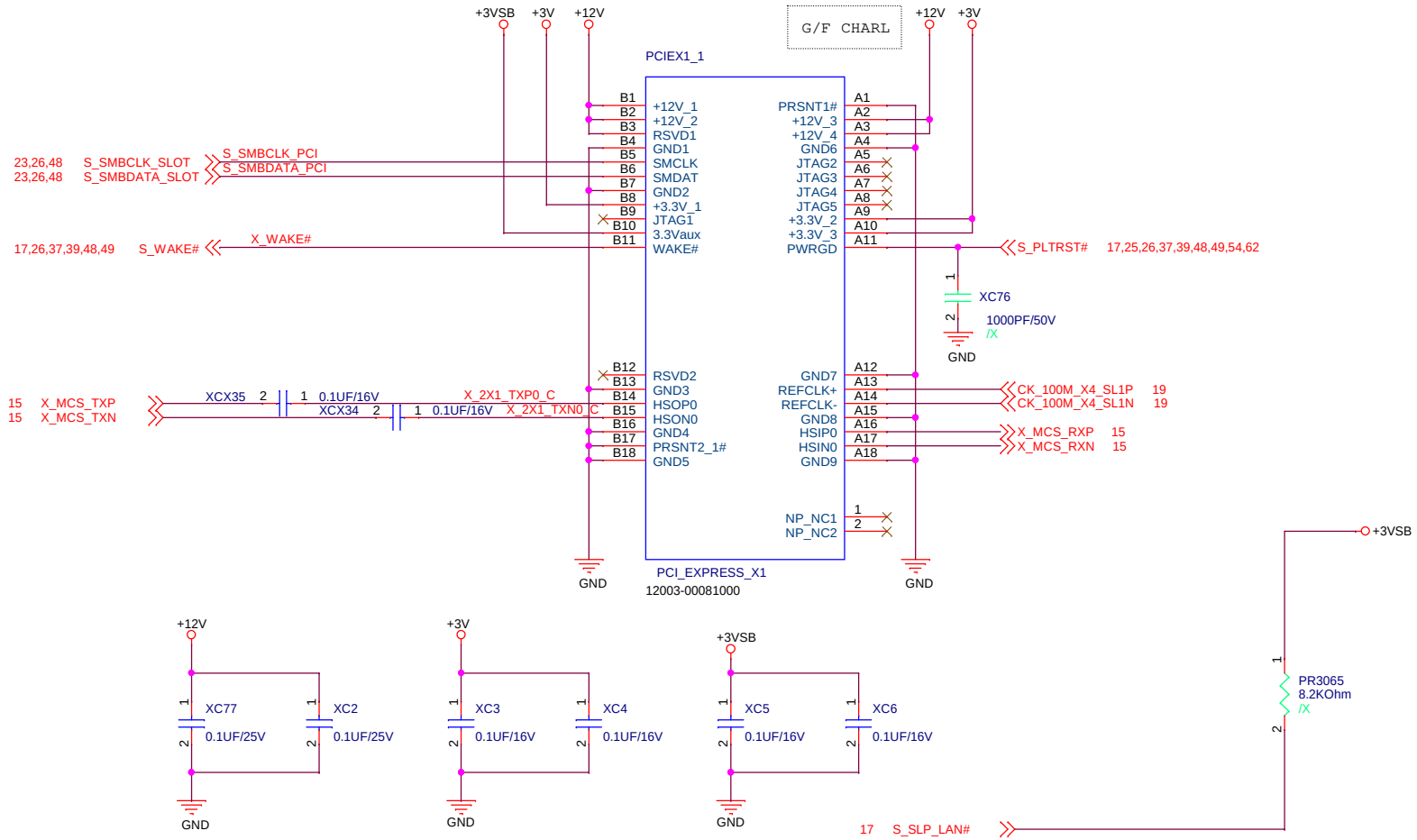

<Variant Name>

ASUS	Title : PCIEX1(Gen2)	
ASUSTek COMPUTER INC.	Engineer: <OrgAddr1>	
Size: Custom	Project Name: IMBM-H81C	Rev: 1.00
Date: Tuesday, October 31, 2017	Sheet 47 of 78	

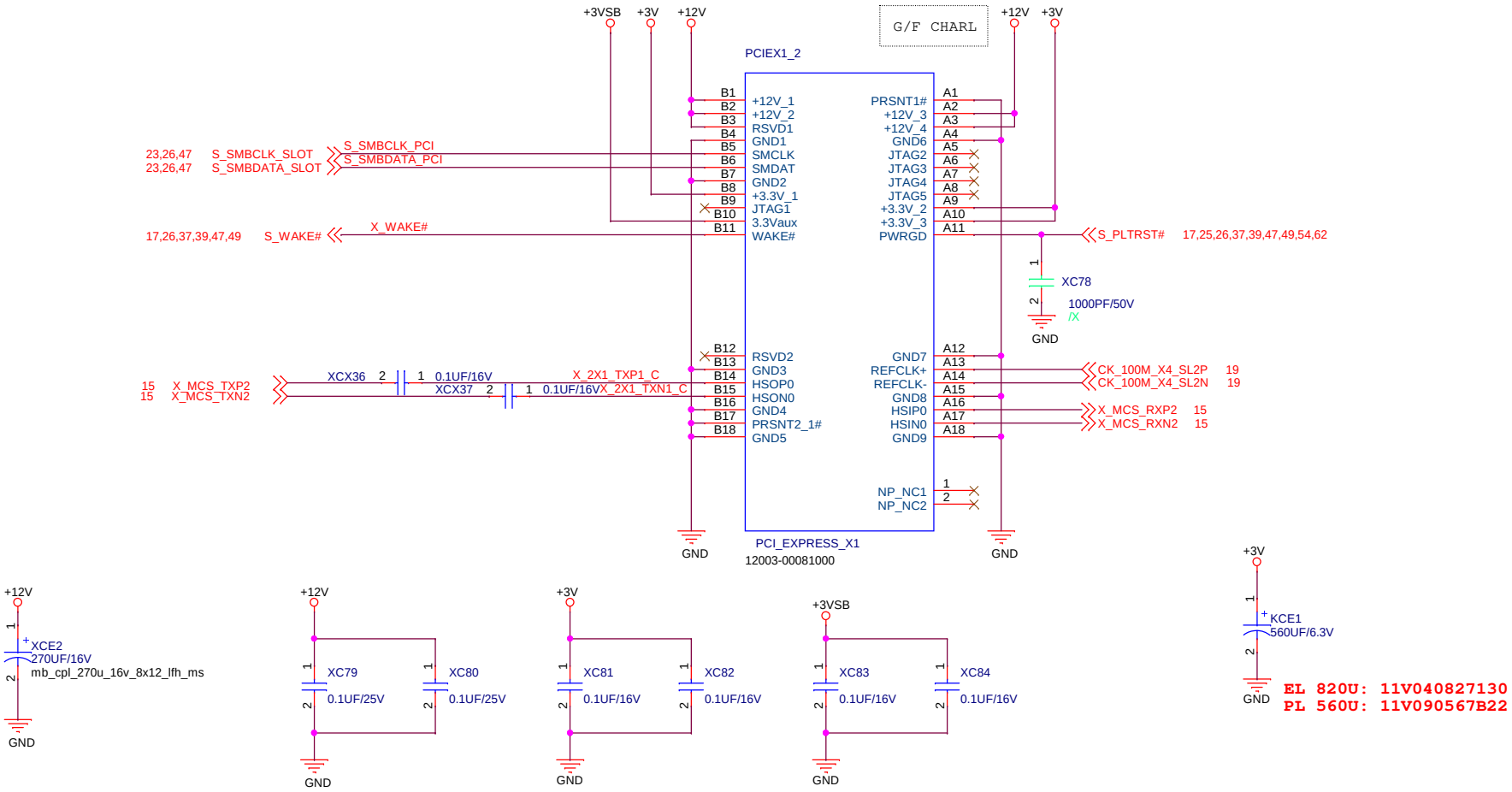

<Variant Name>

ASUS	Title : PCIEX1(Gen2)	
ASUSTek COMPUTER INC.	Engineer: <OrgAddr1>	
Size: Custom	Project Name: IMBM-H81C	Rev: 1.00
Date: Tuesday, October 31, 2017	Sheet 48 of 78	

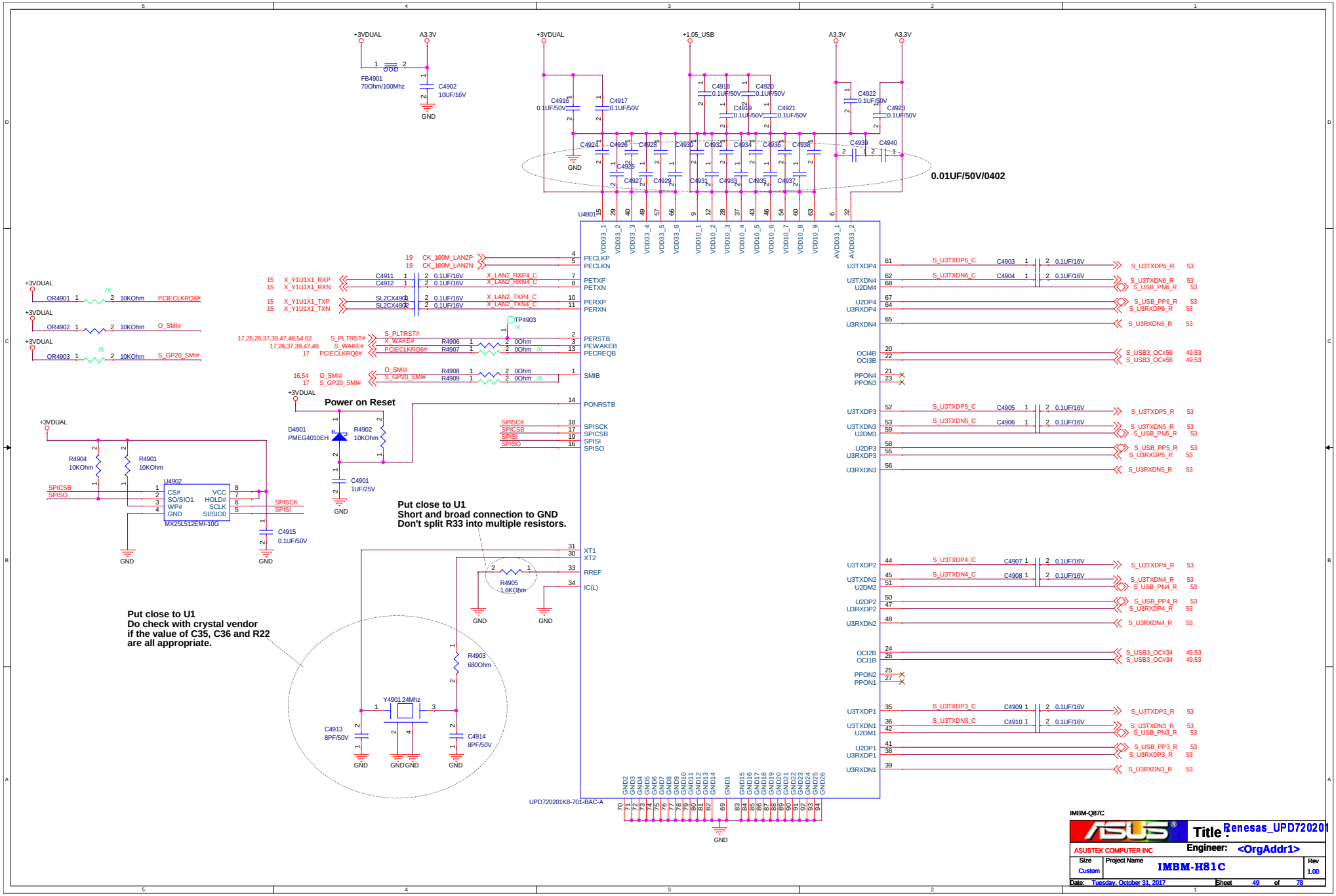
+3VDUAL
A3.3V
FB4901
70Ohm/100Mhz
C4902
10UF/16V
GND
+1.05_USB
C4916
0.1UF/50V
C4917
0.1UF/50V
C4918
0.1UF/50V
C4920
0.1UF/50V
C4919
0.1UF/50V
C4921
0.1UF/50V
C4922
0.1UF/50V
C4923
0.1UF/50V
C4924
C4926
C4928
C4930
C4932
C4934
C4936
C4938
C4939
C4940
C4925
C4927
C4929
C4931
C4933
C4935
C4937
0.01UF/50V/0402
U4901
UPD720201K8-701-BAC-A
VDD33_1
VDD33_2
VDD33_3
VDD33_4
VDD33_5
VDD33_6
VDD10_1
VDD10_2
VDD10_3
VDD10_4
VDD10_5
VDD10_6
VDD10_7
VDD10_8
VDD10_9
AVDD33_1
AVDD33_2
PECLKP
PECLKN
PETXP
PETXN
PERXP
PERXN
PERSTB
PEWAKEB
PECREQB
SMIB
PONRSTB
SPISCK
SPICSB
SPISI
SPISO
XT1
XT2
RREF
IC(L)
U3TXDP4
U3TXDN4
U2DM4
U2DP4
U3RXDP4
U3RXDN4
OCI4B
OCI3B
PPON4
PPON3
U3TXDP3
U3TXDN3
U2DM3
U2DP3
U3RXDP3
U3RXDN3
U3TXDP2
U3TXDN2
U2DM2
U2DP2
U3RXDP2
U3RXDN2
OCI2B
OCI1B
PPON2
PPON1
U3TXDP1
U3TXDN1
U2DM1
U2DP1
U3RXDP1
U3RXDN1
GND1
GND2
GND3
GND4
GND5
GND6
GND7
GND8
GND9
GND10
GND11
GND12
GND13
GND14
GND15
GND16
GND17
GND18
GND19
GND20
GND21
GND22
GND23
GND24
GND25
GND26
19 CK_100M_LAN2P
19 CK_100M_LAN2N
15 X_Y1U1X1_RXP
15 X_Y1U1X1_RXN
15 X_Y1U1X1_TXP
15 X_Y1U1X1_TXN
C4911 0.1UF/16V
C4912 0.1UF/16V
SL2CX4901
SL2CX4902
X_LAN2_RXP4_C
X_LAN2_RXN4_C
X_LAN2_TXP4_C
X_LAN2_TXN4_C
TP4903
17,25,26,37,39,47,48,54,62 S_PLTRST#
17,26,37,39,47,48 S_WAKE#
17 PCIECLKRQ6#
R4906 0Ohm
R4907 0Ohm
16,54 O_SMI#
17 S_GP20_SMI#
R4908 0Ohm
R4909 0Ohm
OR4901 10KOhm PCIECLKRQ6#
OR4902 10KOhm O_SMI#
OR4903 10KOhm S_GP20_SMI#
Power on Reset
D4901
PMEG4010EH
R4902
10KOhm
C4901
1UF/25V
R4904
10KOhm
R4901
10KOhm
U4902
CS#
SO/SIO1
WP#
GND
VCC
HOLD#
SCLK
SI/SIO0
MX25L512EMI-10G
C4915
0.1UF/50V
Put close to U1
Short and broad connection to GND
Don't split R33 into multiple resistors.
R4905
1.6KOhm
Put close to U1
Do check with crystal vendor
if the value of C35, C36 and R22
are all appropriate.
R4903
680Ohm
Y4901 24Mhz
C4913
8PF/50V
C4914
8PF/50V
S_U3TXDP6_C
S_U3TXDN6_C
S_U3TXDP5_C
S_U3TXDN5_C
S_U3TXDP4_C
S_U3TXDN4_C
S_U3TXDP3_C
S_U3TXDN3_C
C4903 0.1UF/16V
C4904 0.1UF/16V
C4905 0.1UF/16V
C4906 0.1UF/16V
C4907 0.1UF/16V
C4908 0.1UF/16V
C4909 0.1UF/16V
C4910 0.1UF/16V
S_USB_PN6_R
S_USB_PP6_R
S_U3RXDP6_R
S_U3RXDN6_R
S_USB3_OC#56
S_USB_PN5_R
S_USB_PP5_R
S_U3RXDP5_R
S_U3RXDN5_R
S_USB_PN4_R
S_USB_PP4_R
S_U3RXDP4_R
S_U3RXDN4_R
S_USB3_OC#34
S_USB_PN3_R
S_USB_PP3_R
S_U3RXDP3_R
S_U3RXDN3_R
IMBM-Q87C
ASUSTEK COMPUTER INC
Title : Renesas_UPD720201
Engineer: <OrgAddr1>
Size Custom
Project Name IMBM-H81C
Rev 1.00
Date: Tuesday, October 31, 2017
Sheet 49 of 78

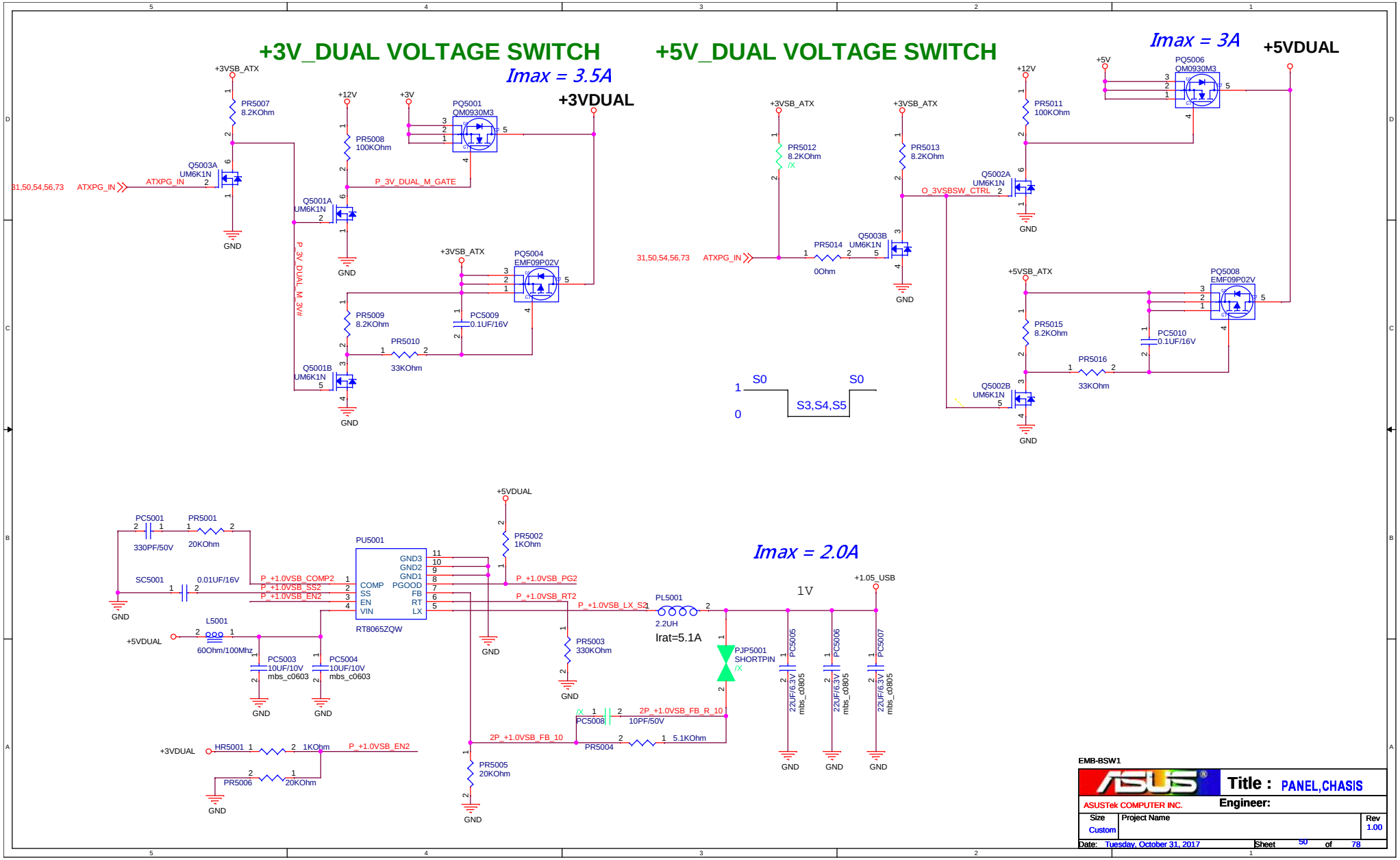

EMB-BSW1

ASUSTek COMPUTER INC.

Title : PANEL,CHASIS

Engineer:

Size	Project Name	Rev
Custom		1.00

Date: Tuesday, October 31, 2017 Sheet 50 of 78

<Variant Name>

ASUSTek COMPUTER INC.	Title : ASM1042A_BlockDiagr	
	Engineer: <OrgAddr1>	
Size: Custom	Project Name: IMBM-H81C	Rev: 1.00
Date: Tuesday, October 31, 2017	Sheet 51 of 78	

IMBM-Q87C

ASUSTEK COMPUTER INC	Title : Empty		
	Engineer: <OrgAddr1>		
Size C	Project Name IMBM-H81C		Rev 1.00
Date: Tuesday, October 31, 2017	Sheet 52 of 78		

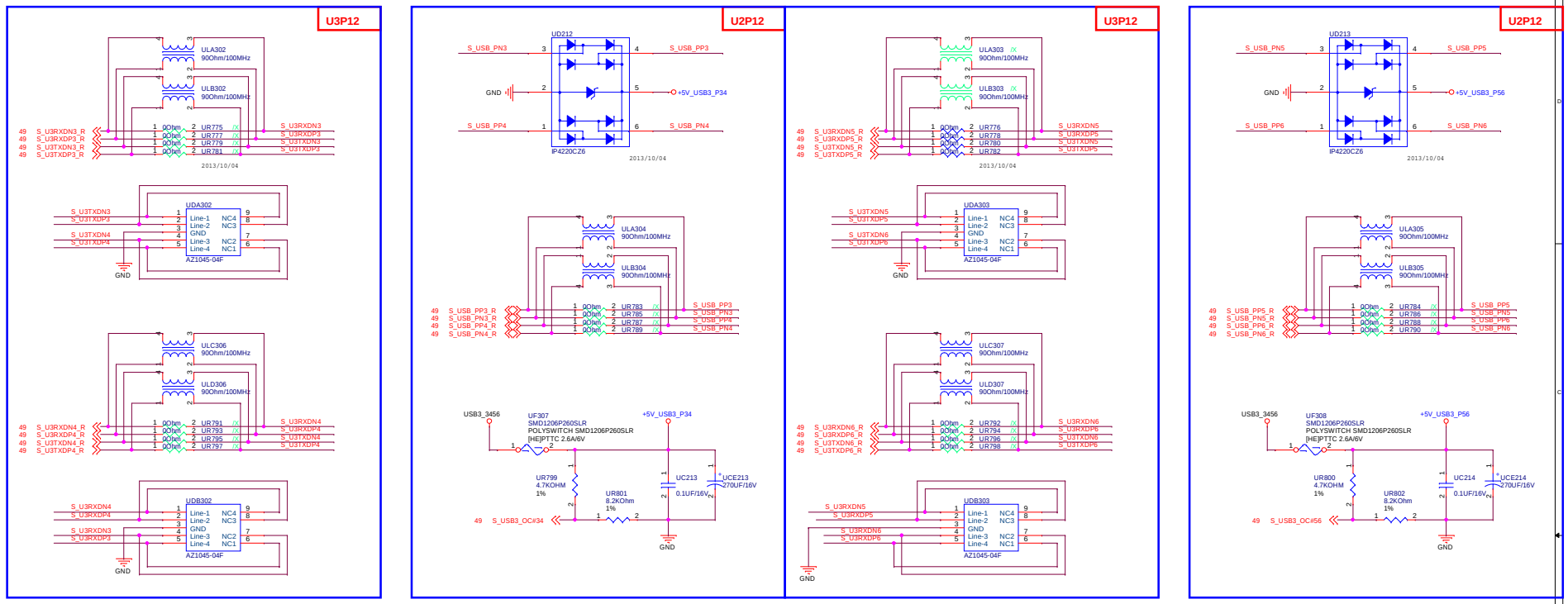

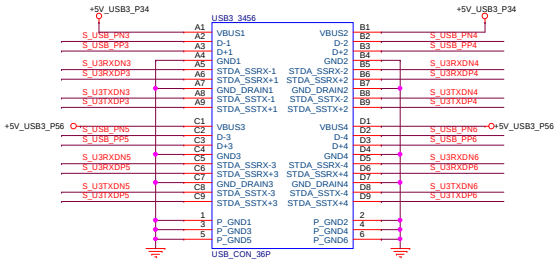

USB power group A

Imax =5.2A

USB3_3456

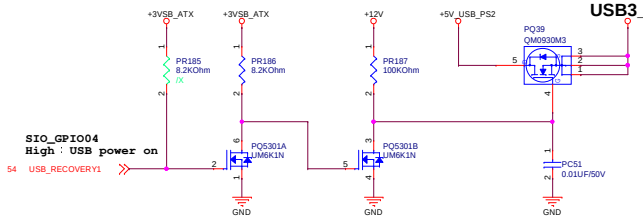

<Variant Name>

ASUSTeK COMPUTER INC.

Title : CHIPSET U2_Part13,14

Engineer: <OrgAddr1>

Size	Project Name	Rev
C	IMBM-H81C	1.00

Date: Tuesday, October 31, 2017 Sheet 53 of 78

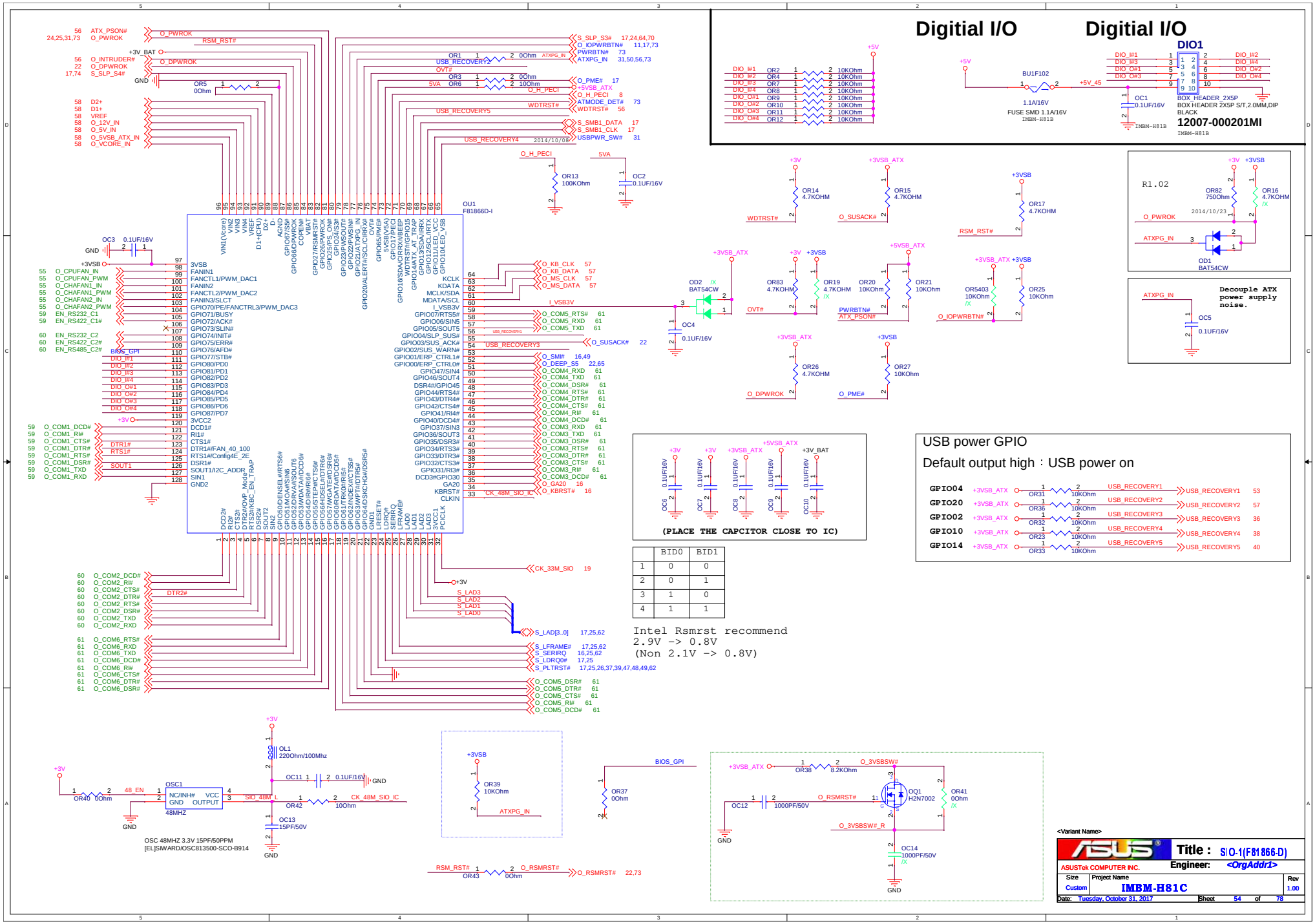

	BID0	BID1
1	0	0
2	0	1
3	1	0
4	1	1

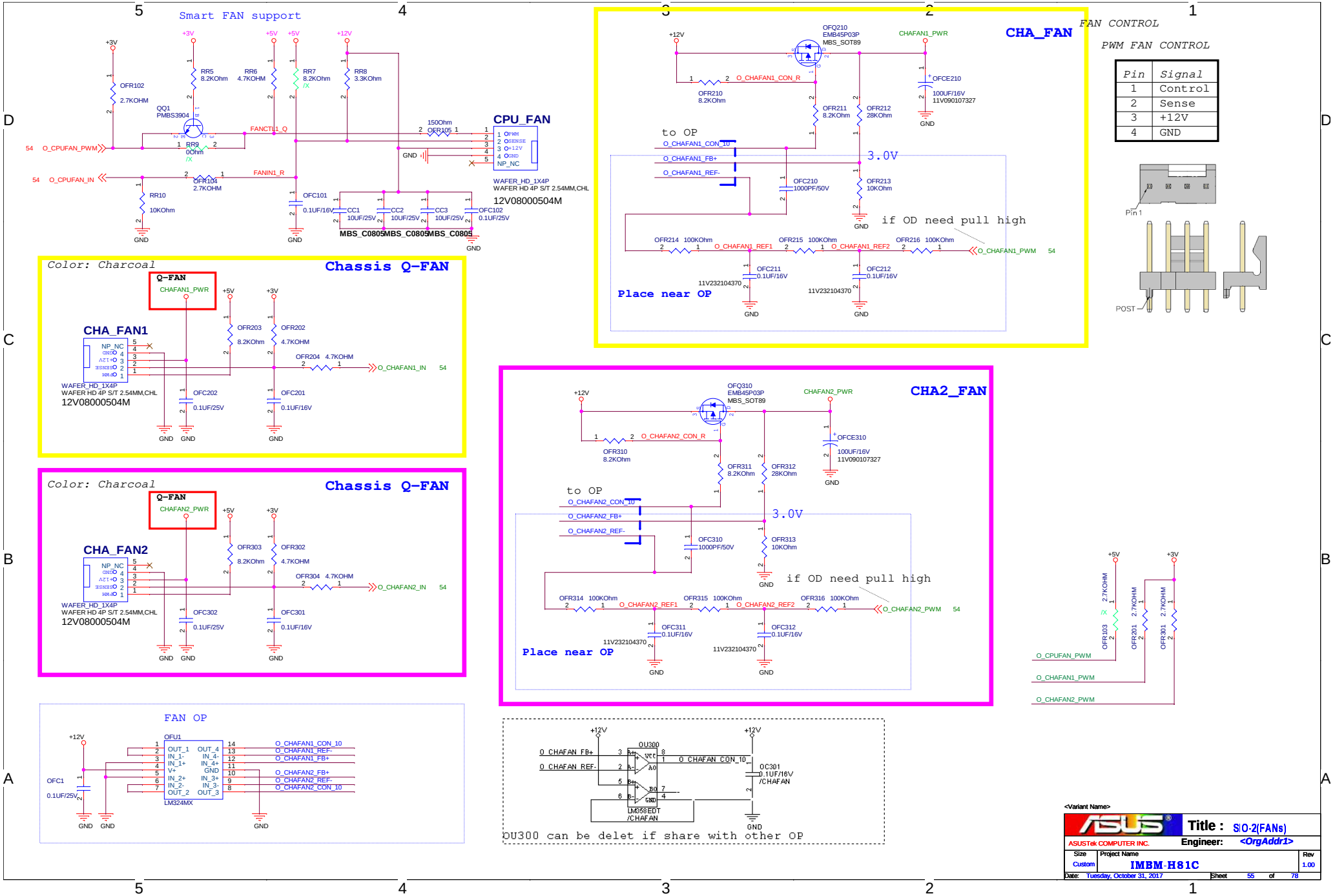

Pin	Signal
1	Control
2	Sense
3	+12V
4	GND

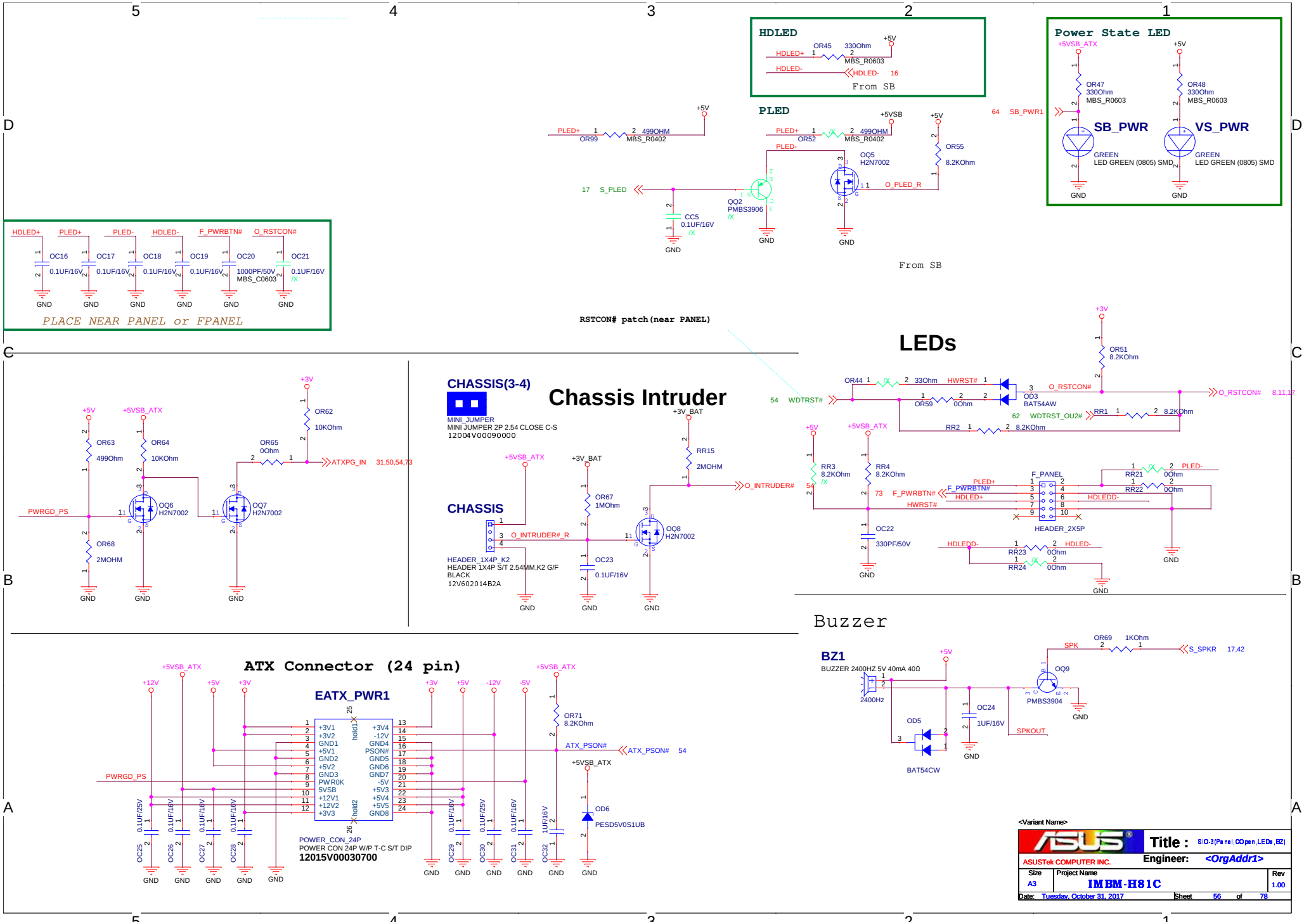
HDLED
HDLED+
HDLED-
OR45 330Ohm MBS_R0603
HDLED- 16
From SB
Power State LED
+5VSB_ATX
OR47 330Ohm MBS_R0603
OR48 330Ohm MBS_R0603
SB_PWR
VS_PWR
GREEN LED GREEN (0805) SMD
64 SB_PWR1
PLED
PLED+
PLED-
OR99 499OHM MBS_R0402
OR52 499OHM MBS_R0402
OQ5 H2N7002
OR55 8.2KOhm
O_PLED_R
17 S_PLED
OQ2 PMBS3906
CC5 0.1UF/16V
From SB
HDLED+ PLED+ PLED- HDLED- F_PWRBTN# O_RSTCON#
OC16 0.1UF/16V
OC17 0.1UF/16V
OC18 0.1UF/16V
OC19 0.1UF/16V
OC20 1000PF/50V MBS_C0603
OC21 0.1UF/16V
PLACE NEAR PANEL or FPANEL
RSTCON# patch(near PANEL)
LEDs
OR51 8.2KOhm
OR44 33Ohm
HWRST#
O_RSTCON#
OD3 BAT54AW
OR59 0Ohm
54 WDTRST#
O_RSTCON# 8,11,17
62 WDTRST_OU2#
RR1 8.2KOhm
RR2 8.2KOhm
RR3 8.2KOhm
RR4 8.2KOhm
F_PANEL
F_PWRBTN#
HDLED+
HWRST#
HDLEDD-
HEADER_2X5P
RR21 0Ohm
RR22 0Ohm
OC22 330PF/50V
RR23 0Ohm
RR24 0Ohm
OR62 10KOhm
OR63 499Ohm
OR64 10KOhm
OR65 0Ohm
ATXPG_IN 31,50,54,73
PWRGD_PS
OQ6 H2N7002
OQ7 H2N7002
OR68 2MOHM
CHASSIS(3-4)
MINI_JUMPER
MINI JUMPER 2P 2.54 CLOSE C-S
12004V00090000
Chassis Intruder
RR15 2MOHM
O_INTRUDER#
CHASSIS
O_INTRUDER#_R
HEADER_1X4P_K2
HEADER 1X4P S/T 2.54MM,K2 G/F BLACK
12V602014B2A
OR67 1MOhm
OC23 0.1UF/16V
OQ8 H2N7002
Buzzer
BZ1
BUZZER 2400HZ 5V 40mA 40Ω
2400Hz
OR69 1KOhm
SPK
S_SPKR 17,42
OQ9 PMBS3904
OC24 1UF/16V
SPKOUT
OD5 BAT54CW
ATX Connector (24 pin)
EATX_PWR1
+12V
+5V
+3V
-12V
-5V
+5VSB_ATX
OR71 8.2KOhm
ATX_PSON#
ATX_PSON# 54
OD6 PESD5V0S1UB
POWER_CON_24P
POWER CON 24P W/P T-C S/T DIP
12015V00030700
OC25 0.1UF/25V
OC26 0.1UF/16V
OC27 0.1UF/16V
OC28 0.1UF/16V
OC29 0.1UF/16V
OC30 0.1UF/25V
OC31 0.1UF/16V
OC32 1UF/16V
GND
<Variant Name>
ASUS
Title : SIO-3(Panel,COpen,LEDs,BZ)
ASUSTek COMPUTER INC.
Engineer: <OrgAddr1>
Size A3
Project Name IMBM-H81C
Rev 1.00
Date: Tuesday, October 31, 2017
Sheet 56 of 78

Keyboard & Mouse

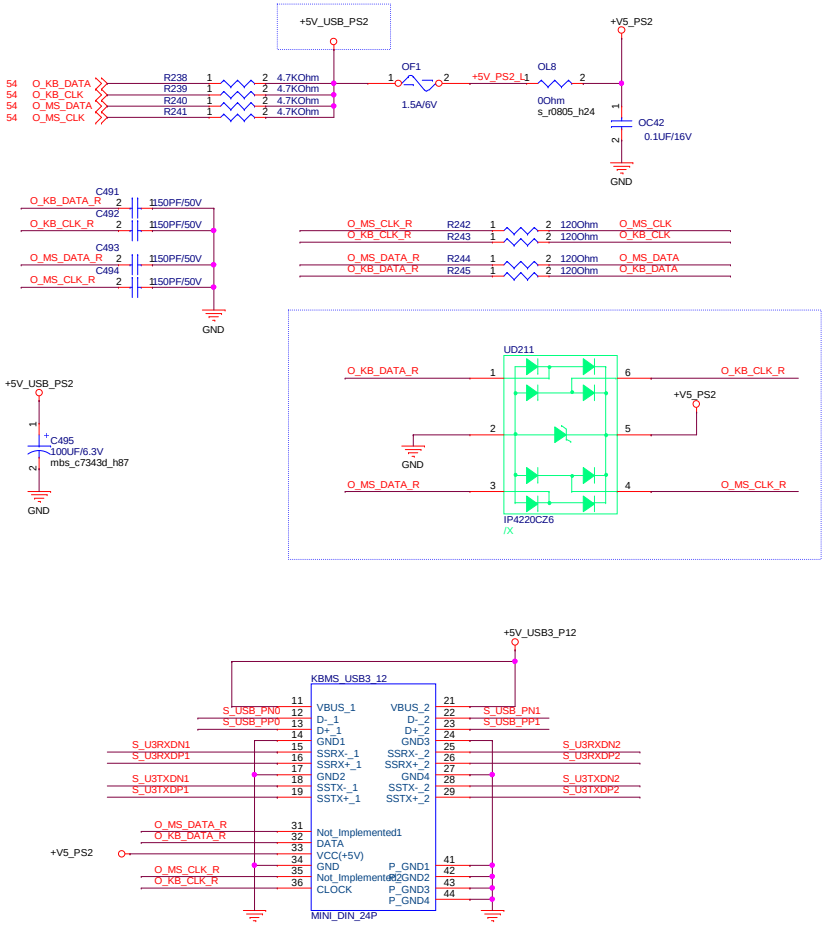

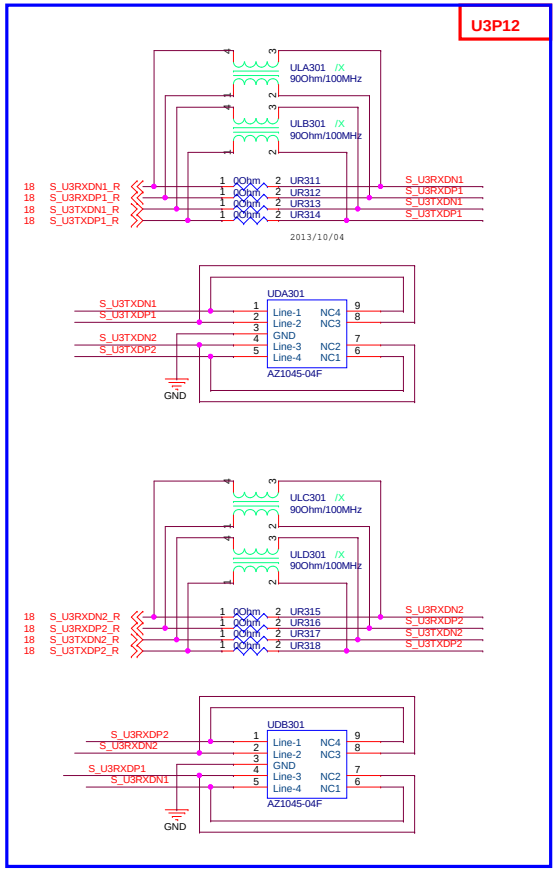

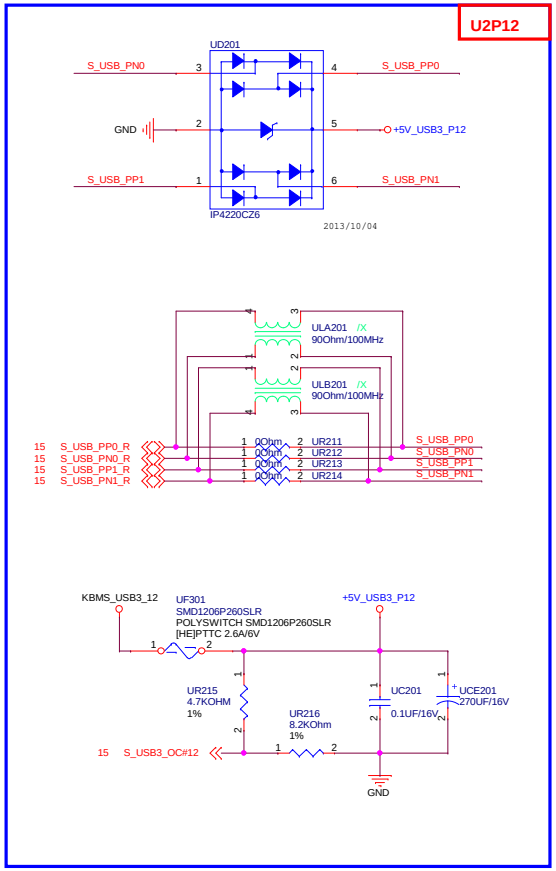

USB power group B

Imax =2.6A

KBMS_USB3_12

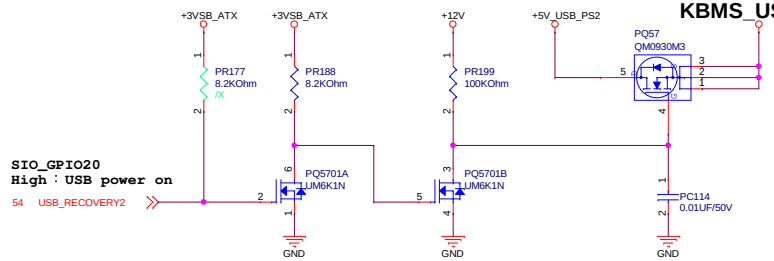

<Variant Name>

ASUSTek COMPUTER INC.	Title : SIO-4(KB/MS)	Engineer: <OrgAddr1>	
Size: Custom	Project Name: IMBM-H81C		Rev: 1.00
Date: Tuesday, October 31, 2017	Sheet 57 of 78		

Temperature Sensing

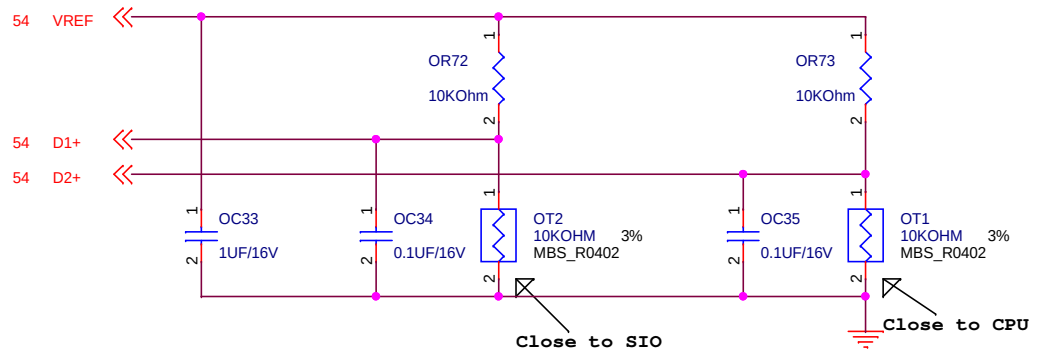

Voltage Sensing

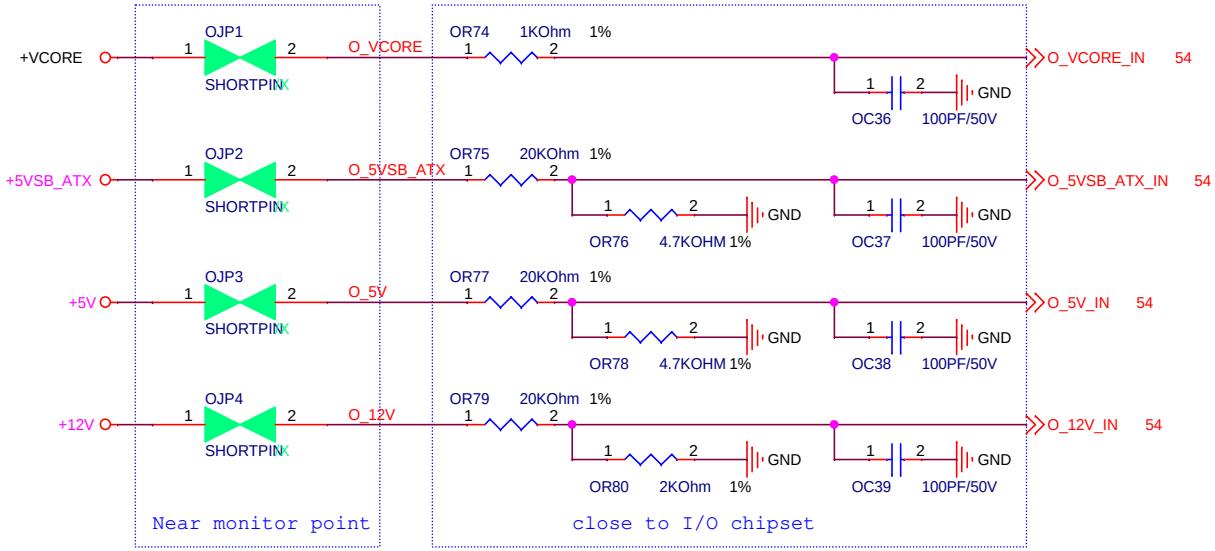

VOLTAGE SENSING.

The best voltage input level is about 1V.

<Variant Name>

ASUS	Title : SIO-5(HW Monitor)	
ASUSTek COMPUTER INC.	Engineer: <OrgAddr1>	
Size A4	Project Name IMBM-H81C	Rev 1.00
Date: Tuesday, October 31, 2017	Sheet 58 of 78	

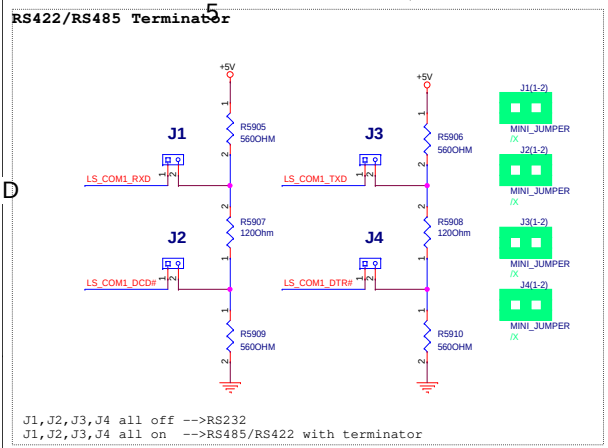

COM1_VSET	RI & Voltage SEL
1-2	12V
3-4	5V
5-6	RI (Default)

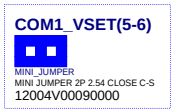

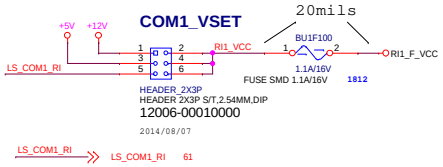

Serial Port 2 Mode Selection			
SD	MODE_1	MODE_2	MODE
0	0	0	RS-422
0	0	1	RS-232
0	1	0	RS-485 (Driver Half Duplex)
0	1	1	RS-485 (Receiver Half Duplex)
1	X	X	Shutdown MODE

Note:

Mode_1 and Mode_2 pin. Internal pull high≒ 625KΩ. As the current is very small (≒15μA), please use the hardware strapping or GPIO (BIOS) to select the modes.

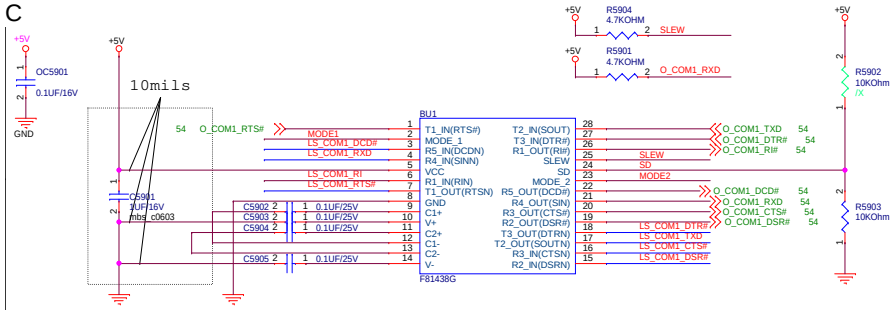

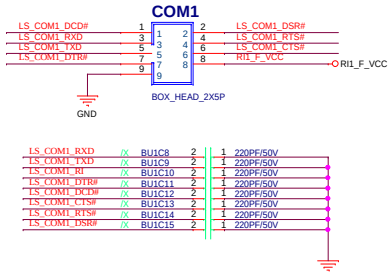

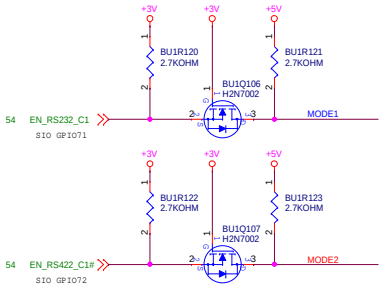

AAEON Standard PIN define

RS-232/485/422 Pin Assignment			
Pin	RS-232	RS-485	RS-422
1	DCD	RS485_D-	RS422_TX-
2	DSR		
3	RX	RS485_D+	RS422_TX+
4	RTS		
5	TX		RS422_RX+
6	CTS		
7	DTR		RS422_RX-
8	RI		

(VDD = +5.0V ± 5%)

Parameter	Conditions	MIN	TYP	MAX	Unit
Supply Current (RS-232)	No Load, MODE = 01.		2	30	mA
Supply Current (RS-485)	No Load, MODE = 10, 11.		2		mA
Supply Current (RS-422)	MODE = 00.		2		mA
Operating Temperature *	Symbol: T	-40		85	◦ C

(VDD = +5.0V ± 5%)

PARAMETER	SYM.	MIN.	TYP.	MAX.	UNIT	CONDITIONS
Transmitter and Logic Input Pins (MODE, SLEW) 1, 2, 23, 24, 25, 27, 28						
Logic Input Voltage HIGH	V_{IL}	2.4			V	VDD = 5.0 V
Logic Input Voltage LOW	-			0.8	V	
Logic Input Pull-up Current	-			±15	μA	
Driver Input Pull High Current	I_{IT}			±15	μA	

<Variant Name>

ASUSTek COMPUTER INC.

Title : COM1(RS-232/422/485)

Engineer: <OrgAddr1>

Size: Custom | Project Name: IMBM-H81C | Rev: 1.00

Date: Tuesday, October 31, 2017 | Sheet 59 of 78

COM2

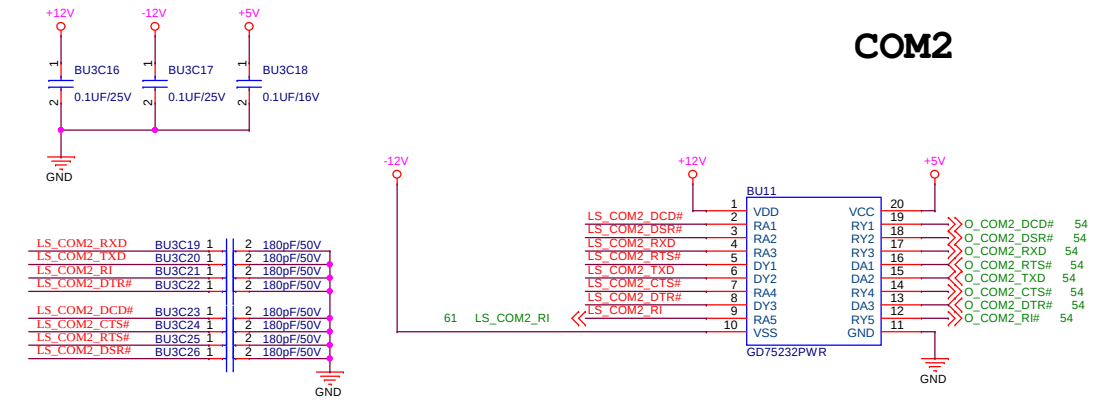

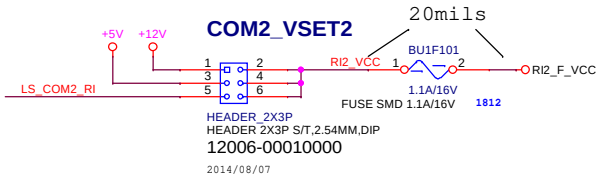

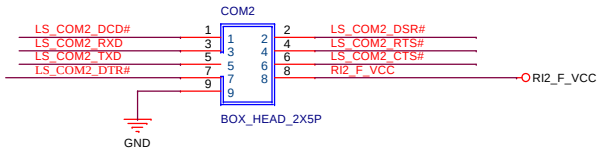

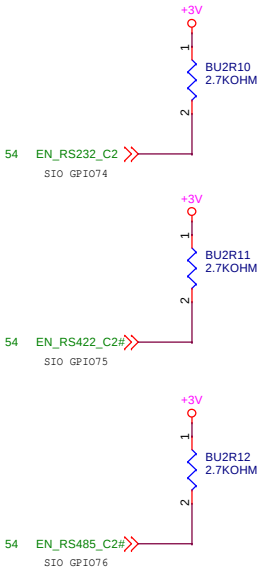

COM1_VSET	RI & Voltage SEL
1-2	12V
3-4	5V
5-6	RI (Default)

COM2_VSET(5-6)2

MINI_JUMPER
MINI JUMPER 2P 2.54 CLOSE C-S
12004V00090000

<Variant Name>

ASUS	Title :	COM3(RS-232/422/485)
ASUSTek COMPUTER INC.	Engineer:	<OrgAddr1>
Size B	Project Name IMBM-H81C	Rev 1.00
Date: Tuesday, October 31, 2017	Sheet 60 of 78	

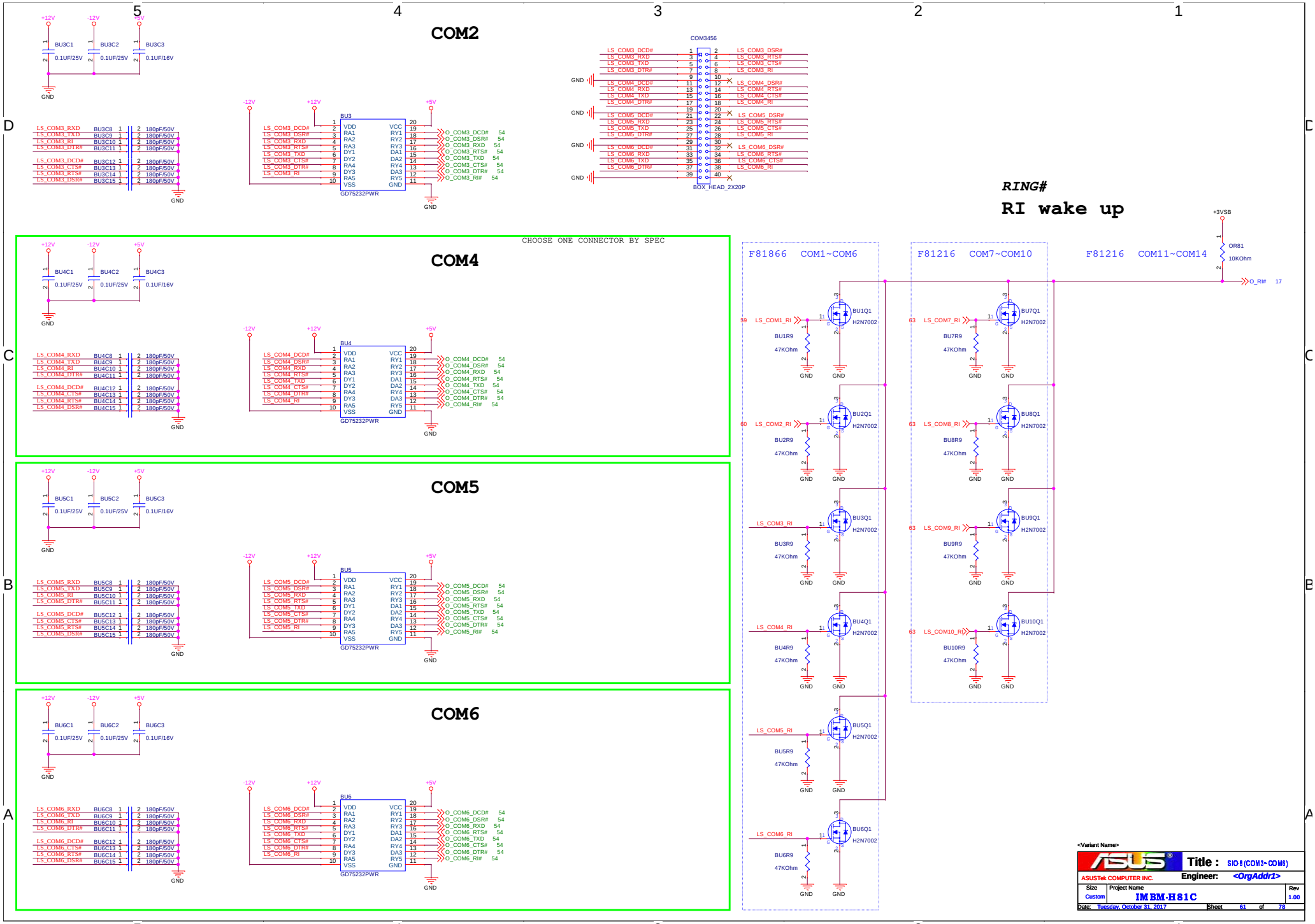
COM2
COM4
COM5
COM6
CHOOSE ONE CONNECTOR BY SPEC
RING#
RI wake up
F81866 COM1~COM6
F81216 COM7~COM10
F81216 COM11~COM14
BU3
BU4
BU5
BU6
GD75232PWR
COM3456
BOX_HEAD_2X20P
BU1Q1
BU2Q1
BU3Q1
BU4Q1
BU5Q1
BU6Q1
BU7Q1
BU8Q1
BU9Q1
BU10Q1
H2N7002
OR81
10KOhm
+3VSB
O_RI#
Title : SIO-8 (COM3~COM6)
ASUSTeK COMPUTER INC.
Engineer: <OrgAddr1>
Size Custom
Project Name IMBM-H81C
Rev 1.00
Date: Tuesday, October 31, 2017
Sheet 61 of 78

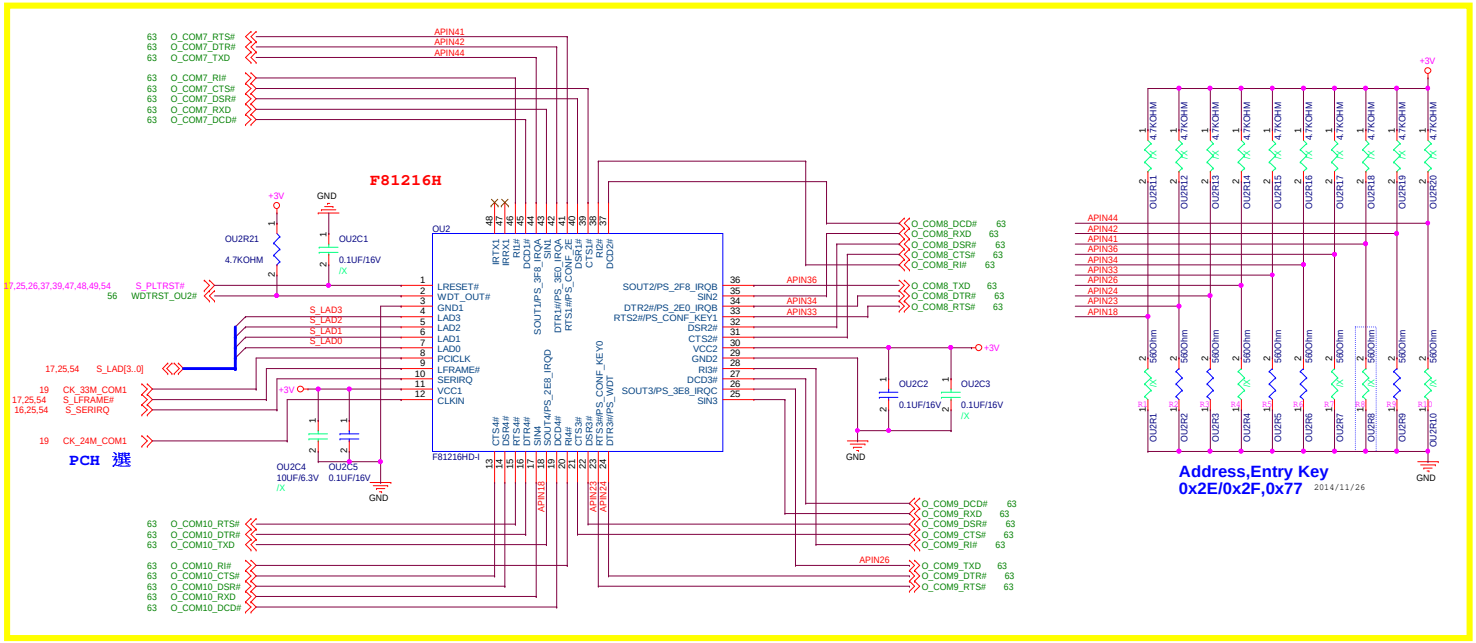

Address,Entry Key
0x2E/0x2F,0x77 2014/11/26

R1 on: UART 4 disabled (program by register)
off: UART 4 address : 0x2e8 IRQ9

R4 on: UART 3 disabled (program by register)
off: UART 3 address : 0x3e8 IRQ5

R6 on & R7 off: UART 2 address : 0x2f8 IRQ4;
R6 off & R7 on: UART 2 address : 0x2e0 IRQ4;
R6 on & R7 on: UART 2 disabled (program by register).

R9 on & R10 off: UART 1 address : 0x3f8 IRQ3;
R9 off & R10 on: UART 1 address : 0x3e0 IRQ3;
R9 on & R10 on: UART 1 disabled (program by register).

R3 on : disabled
R3 off: Watch Dog Timer enabled and setting to 10 second when the clock input is 24Mhz.
If the clock input is 48Mhz , the timer is setting to 5 second.

R5	R2	R8	Address	Entry Key
0	0	0	0x4e/0x4f	0x77
0	0	1	0x2e/0x2f	0x77
0	1	0	0x4e/0x4f	0xa0
0	1	1	0x2e/0x2f	0xa0
1	0	0	0x4e/0x4f	0x87
1	0	1	0x2e/0x2f	0x87
1	1	0	0x4e/0x4f	0x67
1	1	1	0x2e/0x2f	0x67

On: 0 (Pull-Lo)
Off: 1 (Pull-Hi)

44	PS_3F8_IRQA	1: IRQA index 0x3F8 (Default). 0: IRQA index is programmable via register.
42	PS_3E0_IRQA	1: IRQA index 0x3E0 (Default). 0: IRQA index is programmable via register.
41	PS_CONF_2E	1: Configuration Register I/O port is 0x2E. (Default, data port is 0x2F) 0: Configuration Register I/O port is 0x4E (data port is 0x4F).
36	PS_2F8_IRQB	1: IRQB index 0x2F8 (Default). 0: IRQB index is programmable via register.
34	PS_2E0_IRQB	1: IRQB index 0x2E0 (Default). 0: IRQB index is programmable via register.
26	PS_3E8_IRQC	1: IRQC index 0x3E8 (Default). 0: IRQC index is programmable via register.
24	PS_WDT	1: WDT time is 10s (Default). 0: WDT time is programmable via register.
18	PS_2E8_IRQD	1: IRQD index 0x2E8 (Default). 0: IRQD index is programmable via register.

<Variant Name>

ASUS ASUSTek COMPUTER INC.

Title : SIO-9(F81216HD)

Engineer: <OrgAddr1>

Size	Project Name	Rev
Custom	IMBM-H81C	1.00

Date: Tuesday, October 31, 2017 Sheet 62 of 78

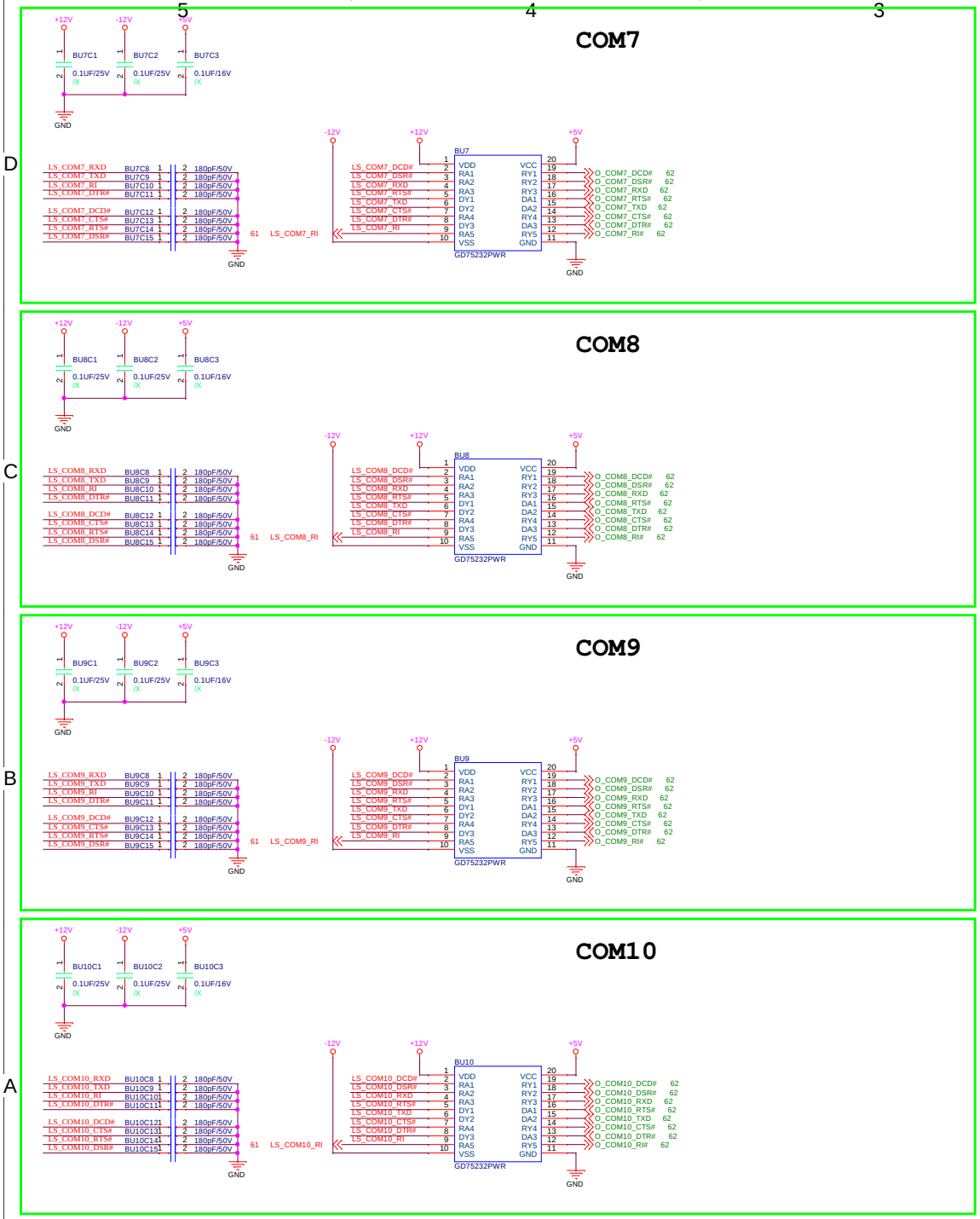

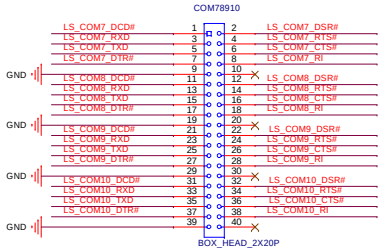

<Variant Name>

ASUSTeK COMPUTER INC.	Title : SIO-10(COM7~COM10)		
	Engineer: <OrgAddr1>		
Size: Custom	Project Name: IMBM-H81C		Rev: 1.00
Date: Tuesday, October 31, 2017	Sheet 63 of 78		

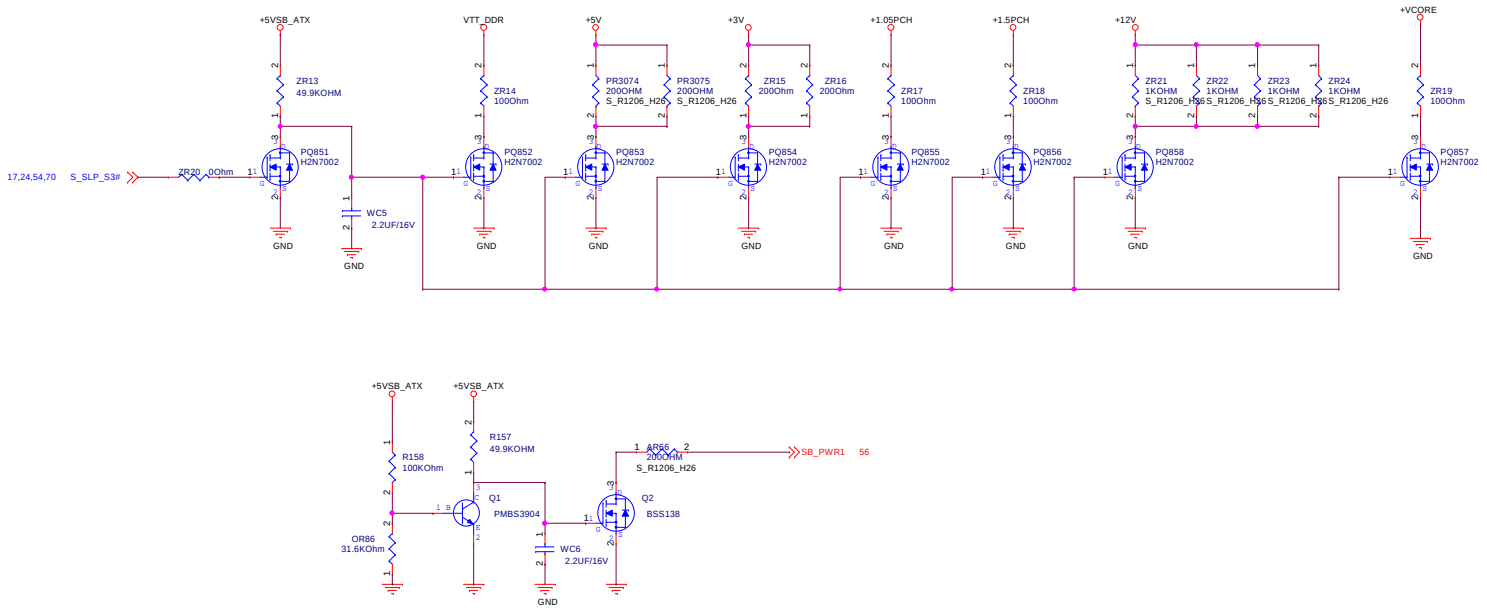

<Variant Name>

ASUS	Title : DC_OUT	
ASUSTeK COMPUTER INC.	Engineer: <OrgAddr1>	
Size: Custom	Project Name: IMBM-H81C	Rev: 1.00
Date: Tuesday, October 31, 2017	Sheet 64 of 78	

+5VSB_ATX ====>+3VSB_ATX

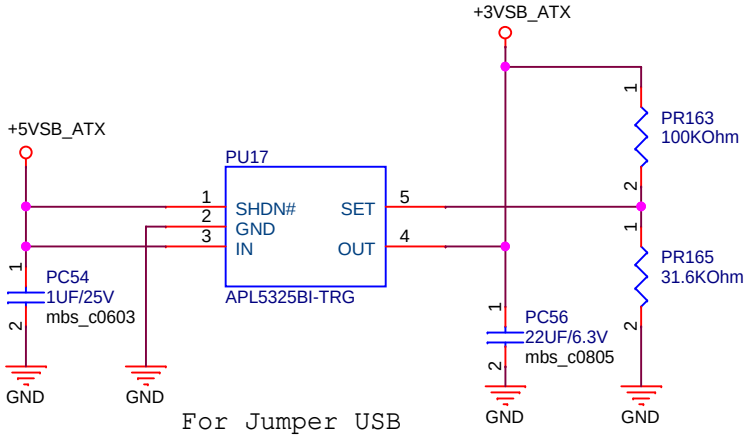

+5VSB ====>+3VSB

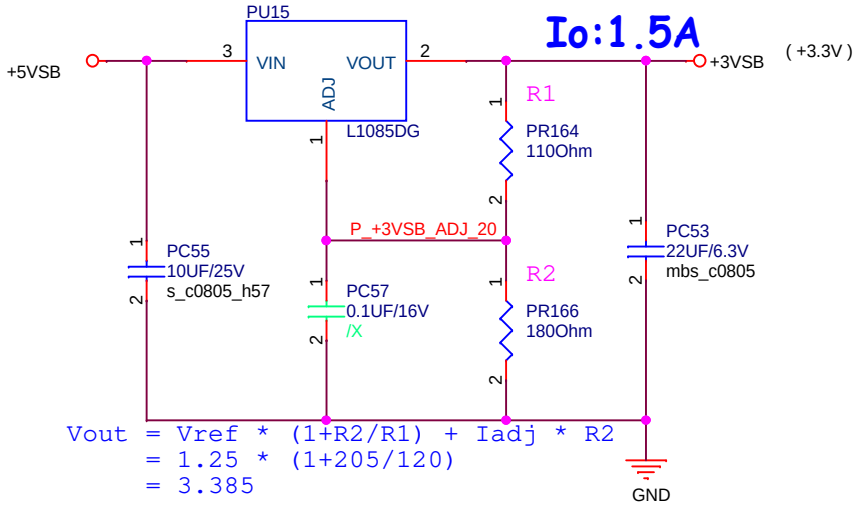

EuP

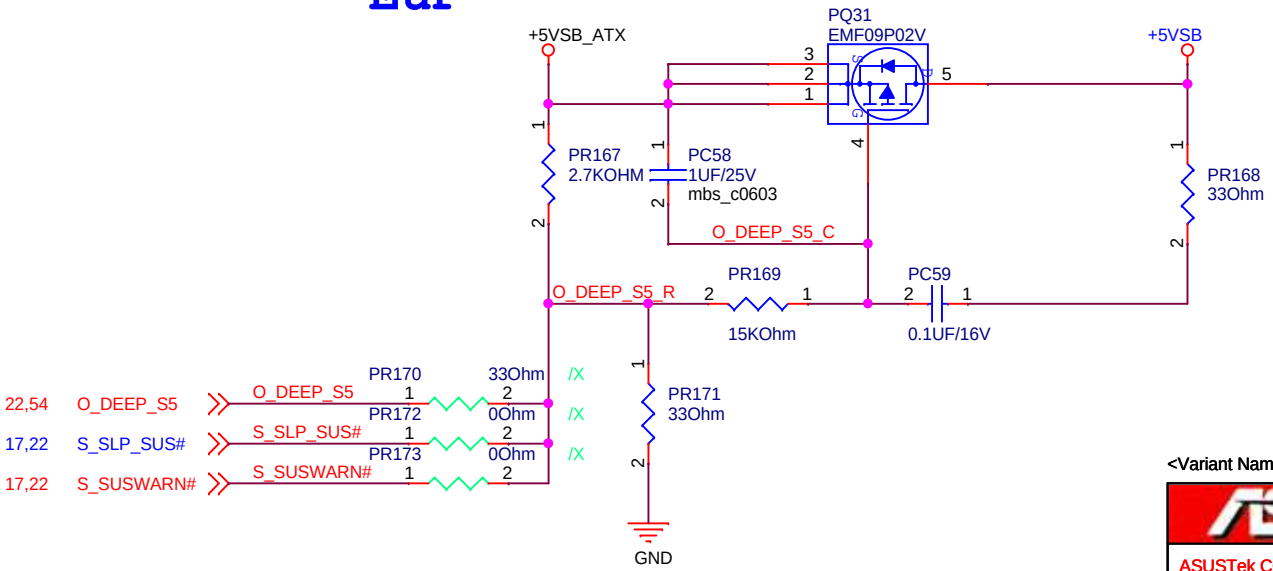

<Variant Name>

ASUSTek COMPUTER INC.	Title : +5VSB/+3VSB/ATMODE	
	Engineer: <OrgAddr1>	
Size: A	Project Name: IMBM-H81C	Rev: 1.00
Date: Tuesday, October 31, 2017	Sheet 65 of 78	

Delete it for EMS

You can only choose 6 pcs point for your project!
Please choose them by your need!

Intel Platform (Haswell-DT platform)

Priority1,must choose if MB have these functions

1 — LAN MDI
- IP1 — IMPEDANCE_CONTROL /X
- IP2 — IMPEDANCE_CONTROL /X

2 — Diff. Clock
- IP3 — IMPEDANCE_CONTROL /X
- IP4 — IMPEDANCE_CONTROL /X

3 — USB2.0
- IP5 — IMPEDANCE_CONTROL /X
- IP6 — IMPEDANCE_CONTROL /X

4 — DDR3 DATA & CMD
- IP7 — IMPEDANCE_CONTROL /X
- IP8 — IMPEDANCE_CONTROL /X

5 — SATA3.0
- IP9 — IMPEDANCE_CONTROL /X
- IP10 — IMPEDANCE_CONTROL /X

Priority2,can choose if MB have these functions(By project)

1 — USB3.0
- IP11 — IMPEDANCE_CONTROL /X
- IP12 — IMPEDANCE_CONTROL /X

2 — DMI/FDI
- IP13 — IMPEDANCE_CONTROL /X
- IP14 — IMPEDANCE_CONTROL /X

Priority3,can choose if MB have these functions(By project)

1 — DDR3 CLK
- IP15 — IMPEDANCE_CONTROL /X
- IP16 — IMPEDANCE_CONTROL /X

2 — PCIe2.0

3 — PCIe3.0
- IP17 — IMPEDANCE_CONTROL /X
- IP18 — IMPEDANCE_CONTROL /X

阻抗值 \ 走線層面	Top	GND	VCC	In1	GND	Bottom	用途
95OHM	4/10	999/999	999/999	4.5/8	999/999	4/10	LAN_MDI / ASM1442(HDMI/DVI) / LVDS
90.1OHM	4.5/9	999/999	999/999	5/7.5	999/999	4.5/9	Unused
90.2OHM	4/6	999/999	999/999	4/5	999/999	4/6	Diff. clock
85.1OHM	5/8	999/999	999/999	5/5.5	999/999	5/8	USB3.0 / USB2.0
85.2OHM	4/4.5	999/999	999/999	4/4	999/999	4/4.5	DMI / FDI / DP / HDMI / PCH_PCIe / SATA3.0
80OHM	5/5.5	999/999	999/999	5.5/4.5	999/999	5/5.5	CPU_PCIe
62OHM	8.5/4	999/999	999/999	10/4	999/999	8.5/4	DDR3(CLK)
40.2OHM	7/5.5	999/999	999/999	8.5/6.5	999/999	7/5.5	DDR3(DQS) (Ch-A & Ch-B 皆 reference GND)
50OHM	4	999	999	5	999	4	Misc. / S.E. clock
37OHM	8.5	999	999	10	999	8.5	VGA
40OHM	7	999	8.5	8.5	999	7	DDR3(DQ) (Ch-A & Ch-B 皆 reference GND) DDR3(CTRL) (Ch-A & Ch-B 皆 reference VCC)
35OHM	9.5	999	11	11	999	9.5	DDR3(CMD) (Ch-A & Ch-B 皆 reference VCC)

Note: S.E. 50Ω W/S = 4/5(Outer) ; W/S = 5/5(Inner)
Note: S.E. 40Ω W/S = 7/5.5(Outer) ; W/S = 8.5/6.5(Inner) for DDR3(DQS)
Note: W=線寬，P=differential pair 間距，S=同group 信號間距，X=不同group 信號間距。

代表Layout 需要 follow Differential Pair rule
代表Layout 需要 follow Single End rule

***** You can only choose 1 function to place point per block.**

PCB Impedance Point 2014/10/20

LAN MDI (Diff. 95ohm)
IP1: (759.44 5495.60)
IP2: (859.44 5445.60)

Diff. Clock (Diff. 90ohm)
IP3: (2379.89 3339.95)
IP4: (2340.52 3261.21)

USB2.0 (Diff. 85-1ohm)
IP5: (1382.50 4880.00)
IP6: (1382.50 4840.00)

DDR3 DATA (S.E. 40ohm)
IP7: (7043.00 8714.45)

DDR3 CMD (S.E. 35ohm)
IP8: (7118.20 6627.83)

SATA3.0 (Diff. 85-2ohm)
IP9: (9190.00 667.50)
IP10: (9230.00 667.50)

USB3.0 (Diff. 85-1ohm)
IP11: (1247.50 5690.00)
IP12: (1247.50 5730.00)

DMI/FDI (Diff. 85-2ohm)
IP13: (6319.94 2011.26)
IP14: (6351.80 2011.26)

DDR3 CLK (Diff. 62ohm)
IP15: (6892.60 6116.02)
IP16: (6967.80 6155.39)

PCIe3.0 (Diff. 80ohm)
IP17: (2480.00 3442.50)
IP18: (2480.00 3442.50)

<Variant Name>

ASUS ASUSTek COMPUTER INC.	Title : PCB Impedance Point Engineer:	
Size A3	Project Name IMBM-H81C	Rev 1.00
Date: Tuesday, October 31, 2017	Sheet 66 of 78	

m-ATX Screw Hole

Delete it for EMS

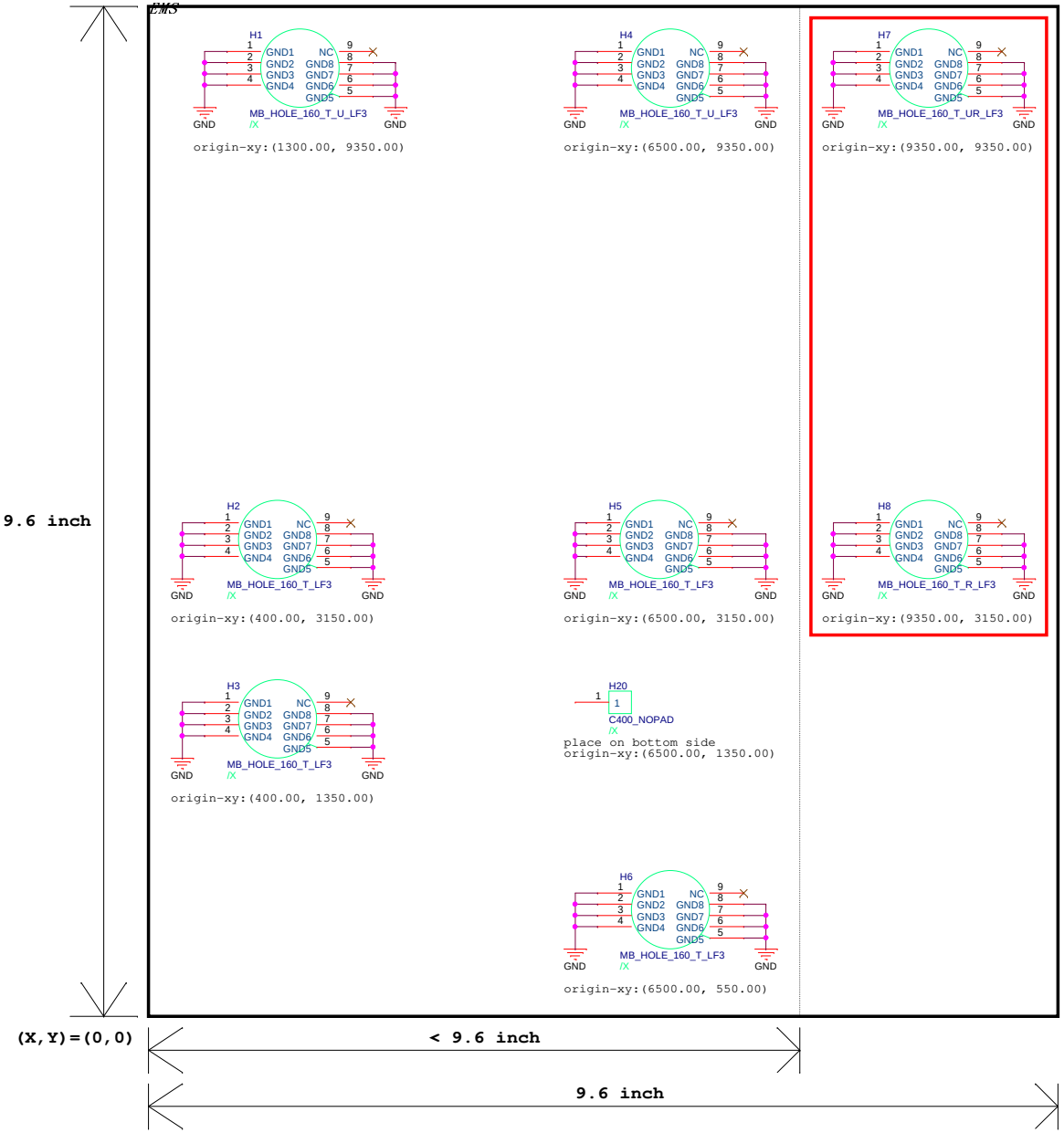

m-ATX Screw Select

	Standard (9.6 x 9.6)	Scale down (9.6 x <9.6)
H1	V	V
H2	V	V
H3	V	V
H4	V	V
H5	V	V
H6	V	V
H7	V	X
H8	V	X
H20	V	V

MB SCREW FOOTPRINT

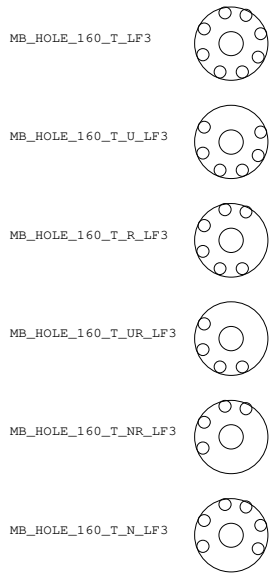

IMBM-Q87C

ASUSTEK COMPUTER INC	Title : Screw Hole	
	Engineer: <OrgAddr1>	
Size A3	Project Name IMBM-H81C	Rev 1.00
Date: Tuesday, October 31, 2017	Sheet 67 of 78	

Selling Point

2012/12/20

MODEL_LOGO1
IMBM-H81A
IMBM-H81A
/X

PCB
PCB
IMBM-Q87B
08001-07821200
2012/07/11

08001-11050000 : GECS
08001-11050100 : TRUSTECH
08001-11050200 : DF

Fiducial Mask (光學點)

光學點需要 6 ~ 10 顆,
LayoutRD會依空間大小及版本需求
擺放所需的光學點
所以兩種光學點都需畫入線路中,
最後再做刪除.

大顆十字光學點

小顆十字光學點

INDEX31 INDEX_PLUS /X
INDEX32 INDEX_PLUS /X
INDEX33 INDEX_PLUS /X
INDEX34 INDEX_PLUS /X
INDEX35 INDEX_PLUS /X
INDEX36 INDEX_PLUS /X

2012/09/11

Logo

common Logo for all projects

LOGO2
FCC
FCC
/X

LOGO5
WEEE_LOGO
WEEE_LOGO
/X

LOGO6
CE
CE
/X

LOGO7
PCB MADE IN CHINA
PCB_MADE_IN_CHINA
/X

<Variant Name>

ASUS	Title :	Selling Point_Logo
ASUSTEK COMPUTER INC	Engineer:	<OrgAddr1>
Size A3	Project Name IMBM-H81C	Rev 1.00
Date: Tuesday, October 31, 2017	Sheet 68 of 78	

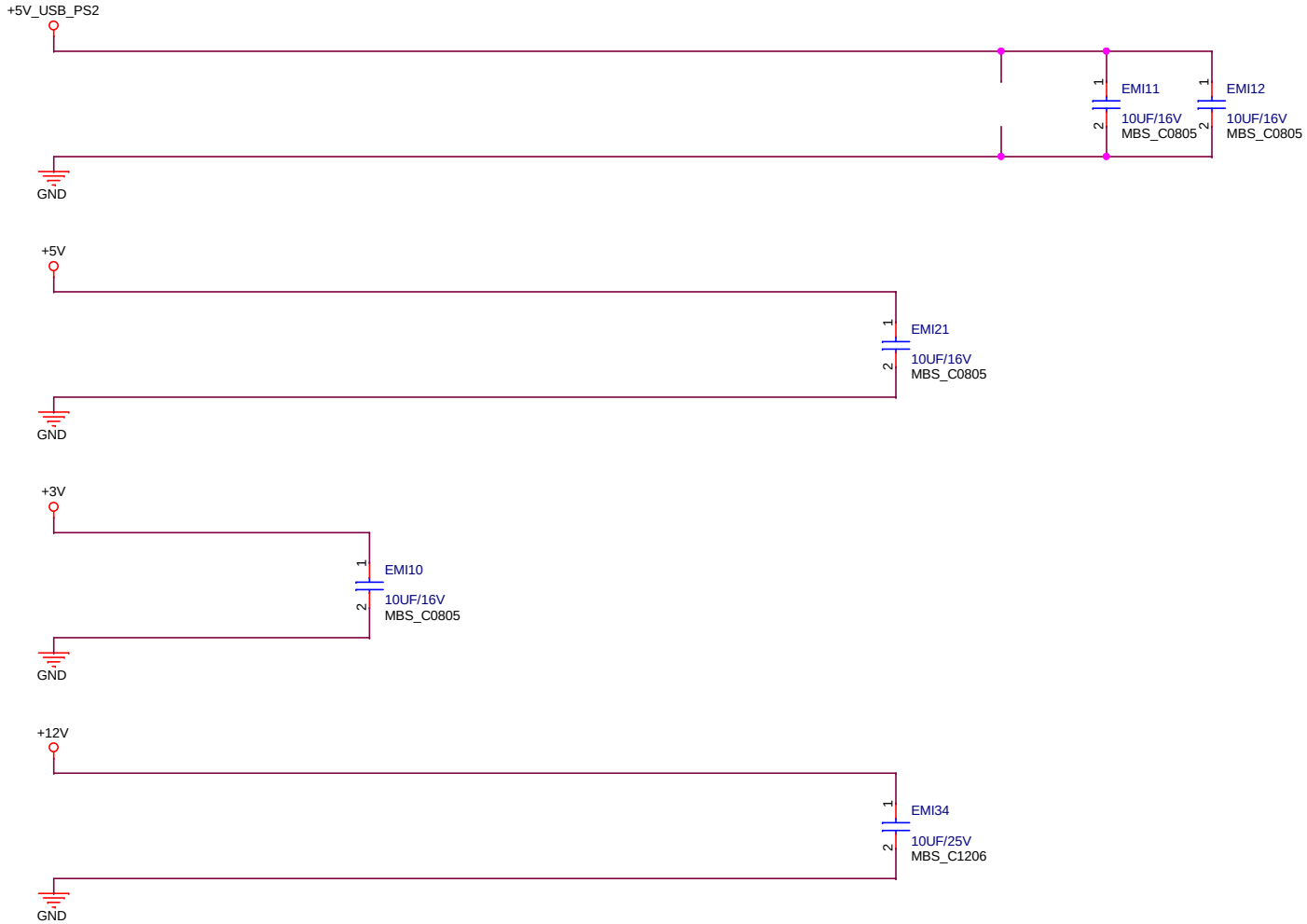

2014/10/22

EMI Caps Total *45ea

+5V_USB_PS2
(6450.00 190.94)*2 EMI 0402 caps
(1835.98 492.40)*1 EMI 0402 caps
(1055.00 3000.00)*1 EMI 0402 caps
(2542.50 3835.00)*1 EMI 0402 caps
(2444.02 4620.00)*1 EMI 0402 caps
(1365.00 4759.06)*1 EMI 0402 caps
(1139.06 6090.00)*1 EMI 0402 caps
(989.06 9325.00)*1 EMI 0402 caps
(2785.00 487.31)*1 EMI 0805 caps
(1139.06 6090.00)*1 EMI 0805 caps
(989.06 9325.00)*1 EMI 0805 caps

+5V
(1795.98 9337.40)*1 EMI 0402 caps
(1737.50 8665.00)*1 EMI 0402 caps
(1118.98 8985.00)*1 EMI 0402 caps
(4430.00 1067.50)*2 EMI 0402 caps
(6400.98 852.40)*1 EMI 0402 caps
(7162.00 390.00)*1 EMI 0402 caps
(9355.00 1394.00)*1 EMI 0402 caps
(1795.98 9337.40)*1 EMI 0805 caps

+3V
(2020.00 2987.50)*1 EMI 0402 caps
(2105.00 2597.50)*1 EMI 0402 caps
(3375.00 1462.00)*1 EMI 0402 caps
(3375.00 662.00)*1 EMI 0402 caps

+12V
(8815.00 5460.00)*2 EMI 0402 caps
(6040.00 4505.00)*2 EMI 0402 caps
(7815.00 4110.00)*2 EMI 0402 caps
(1610.00 1855.00)*1 EMI 0402 caps
(1675.00 1462.00)*1 EMI 0402 caps
(2370.00 6771.00)*1 EMI 0402 caps
(1785.00 7750.00)*1 EMI 0402 caps
(2660.00 3670.00)*1 EMI 0402 caps
(2600.00 5112.00)*1 EMI 0402 caps
(8030.00 657.50)*1 EMI 0402 caps
(5755.00 9415.00)*2 EMI 0402 caps
(7675.00 9073.00)*1 EMI 0402 caps
(8815.00 5460.00)*1 EMI 1206 caps
(2660.00 3670.00)*1 EMI 1206 caps
(8030.00 657.50)*1 EMI 1206 caps
(5755.00 9415.00)*1 EMI 1206 caps

<Variant Name>

ASUS	Title : EMI Caps	
ASUSTek COMPUTER INC.	Engineer:	
Size: Custom	Project Name: IMBM-H81C	Rev: 1.00
Date: Tuesday, October 31, 2017	Sheet 69 of 78	

POWER SEQUENCE

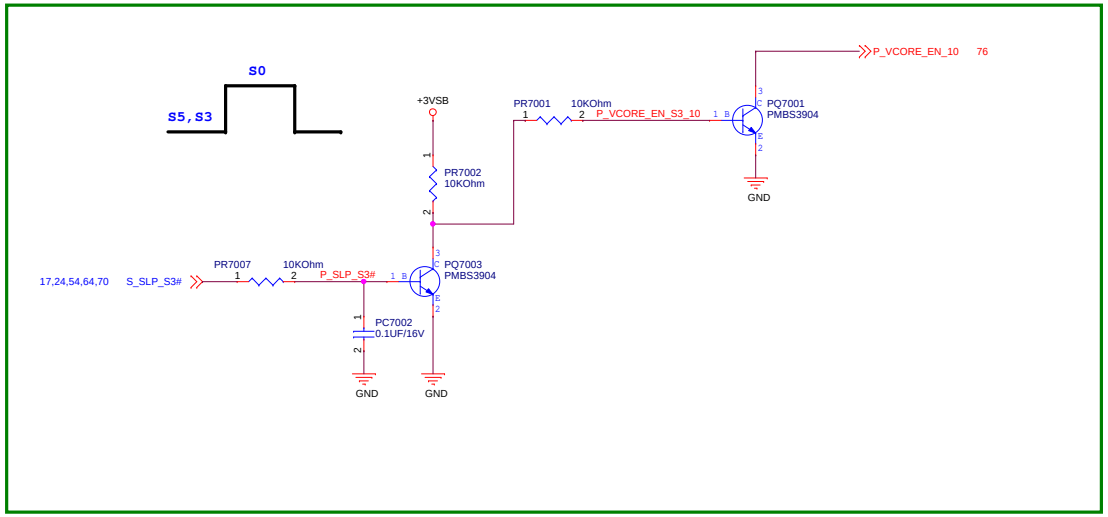

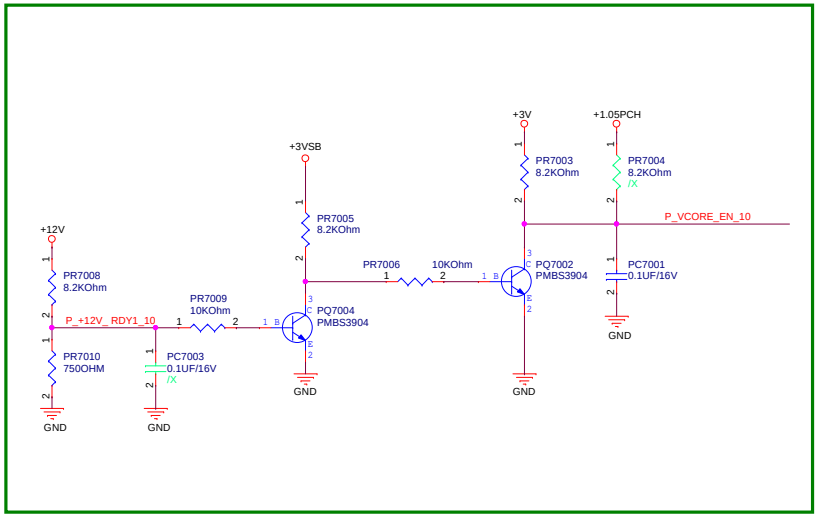

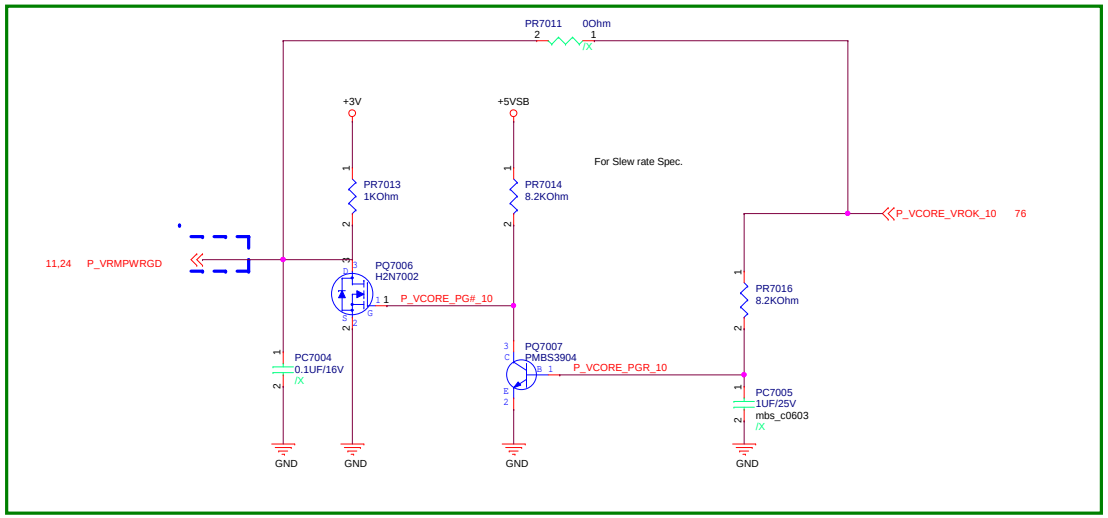

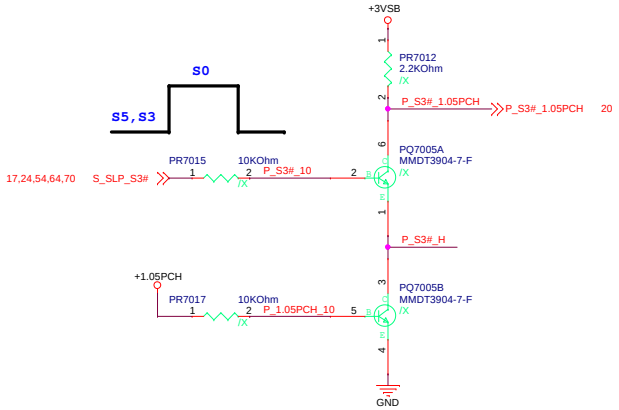

<Variant Name>

ASUS	Title : P_Power Sequence		
ASUSTeK COMPUTER INC.	Engineer: <OrgAddr1>		
Size: Custom	Project Name: IMBM-H81C		Rev: 1.00
Date: Tuesday, October 31, 2017	Sheet 70 of 78		

Delete it for EMS

<Variant Name>

ASUSTek COMPUTER INC.	Title : Clock GEN	
	Engineer: <OrgAddr1>	
Size: Custom	Project Name: IMBM-H81C	Rev: 1.00
Date: Tuesday, October 31, 2017	Sheet 71 of 78	

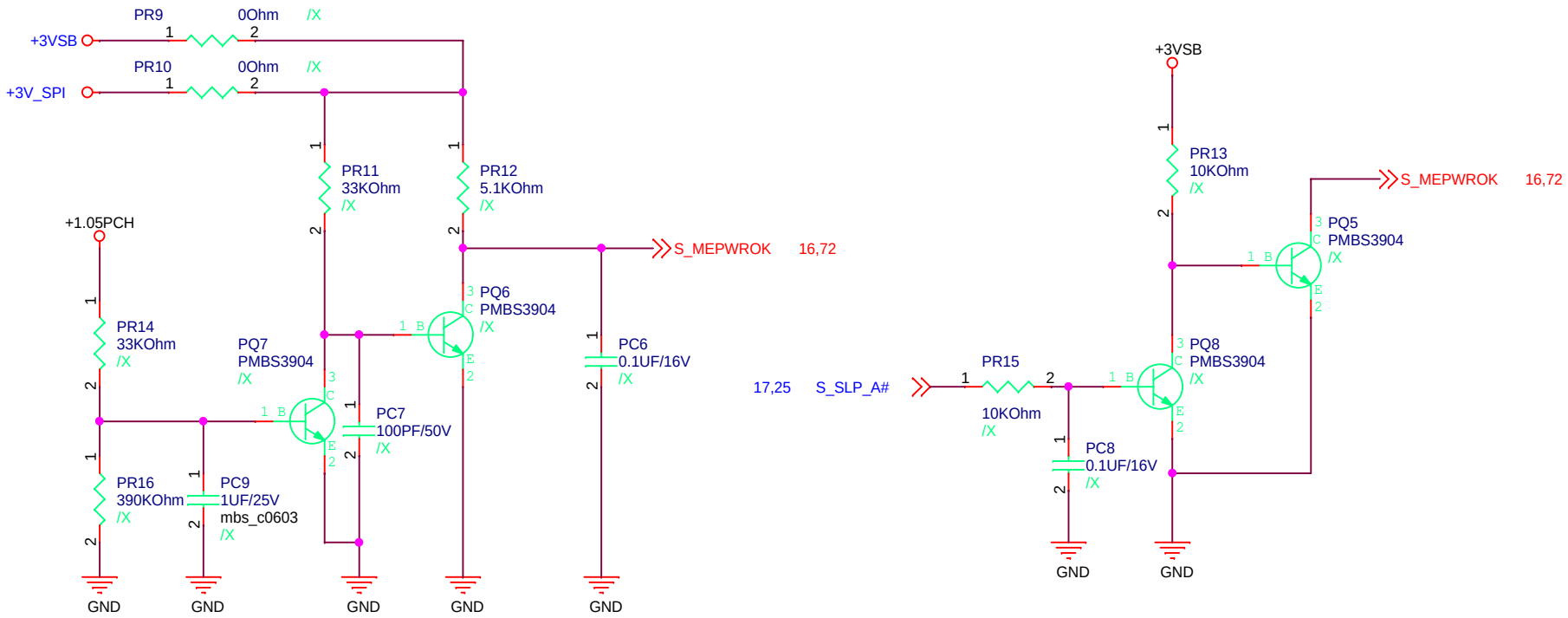

<Variant Name>

ASUSTek COMPUTER INC.	Title : +1.05ME	
	Engineer: <OrgAddr1>	
Size: A	Project Name: IMBM-H81C	Rev: 1.00
Date: Tuesday, October 31, 2017	Sheet 72 of 78	

+5V_DUAL VOLTAGE SWITCH & POWER CIRCUIT

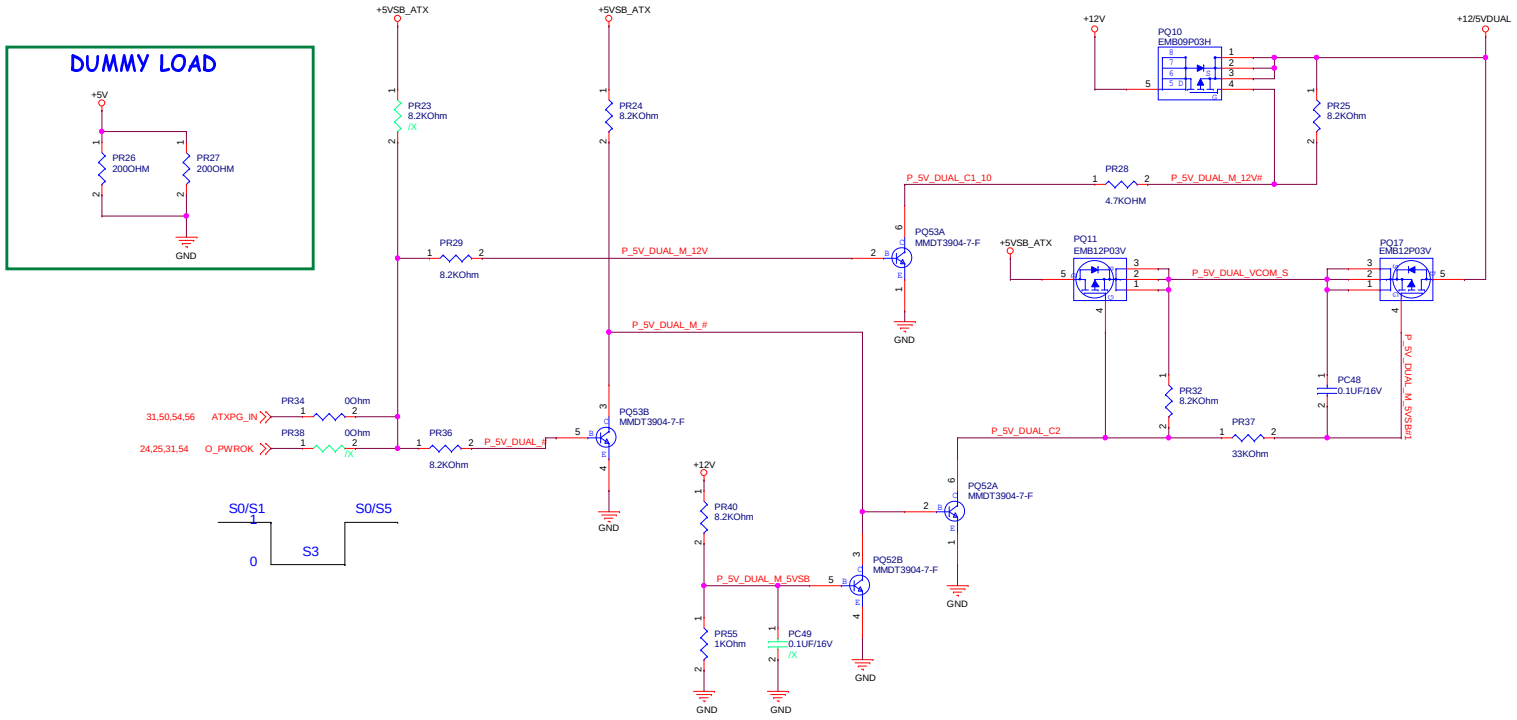

Auto Power Button

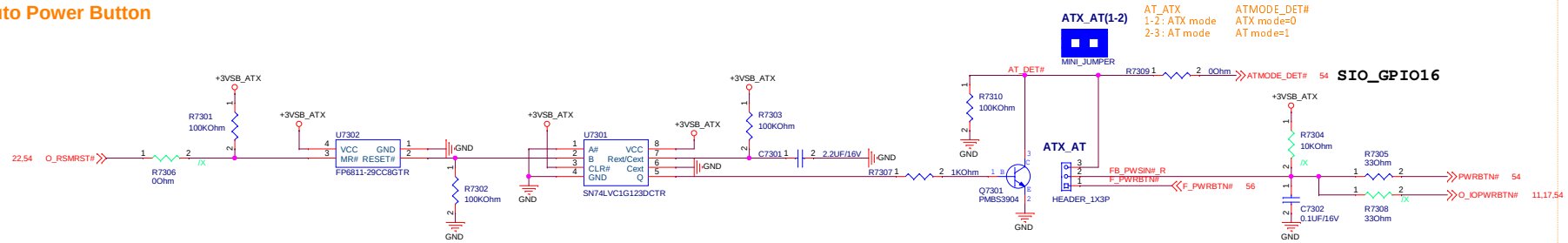

<Variant Name>

ASUS	Title :	+12/5VDUAL/+5VDUAL
ASUSTek COMPUTER INC.	Engineer:	<OrgAddr1>
Size: Custom	Project Name: IMBM-H81C	Rev: 1.00
Date: Tuesday, October 31, 2017	Sheet 73 of 78	

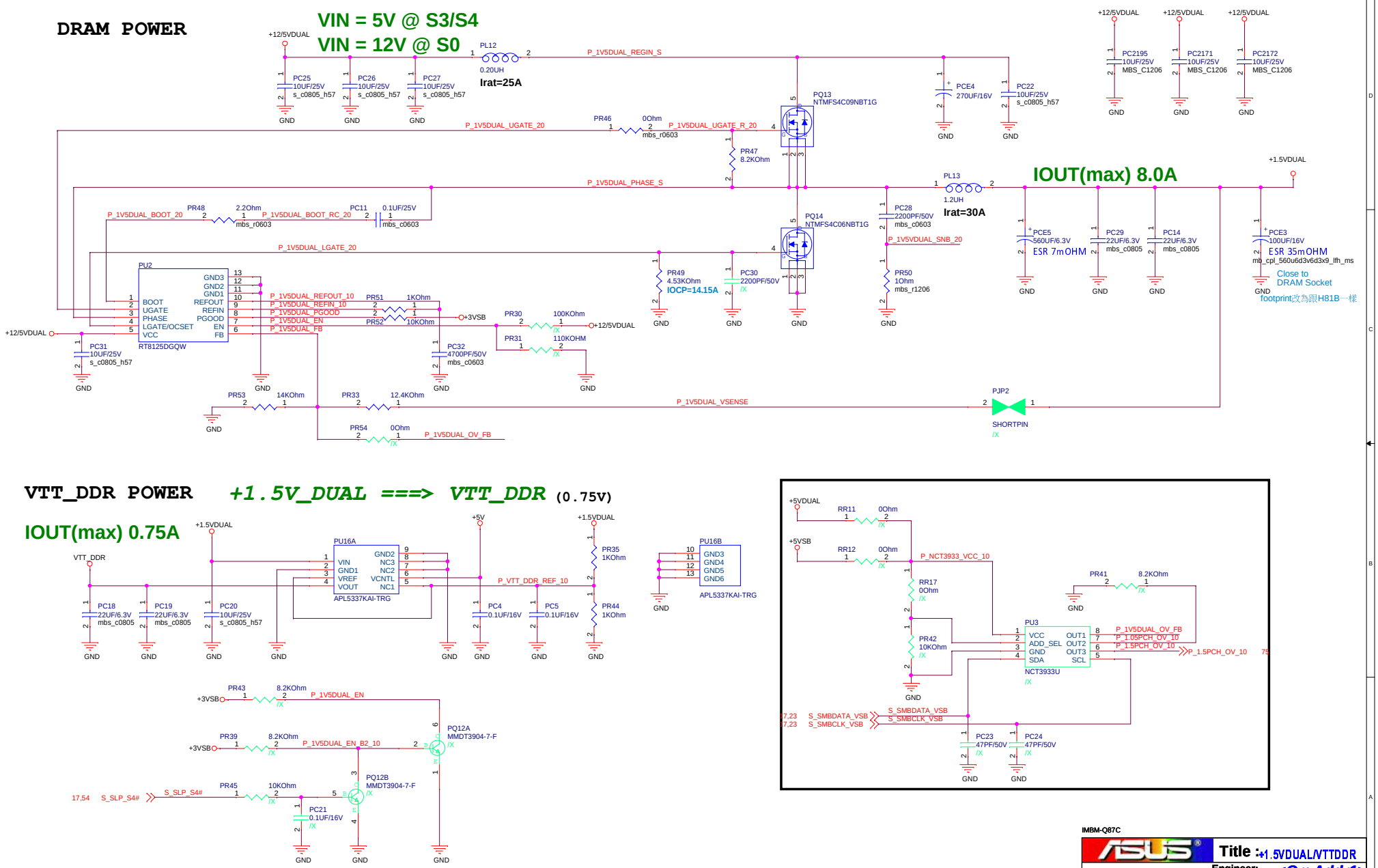

IMBM-Q87C

ASUS	Title : +1.5VDUAL/VTTDDR	
ASUSTEK COMPUTER INC	Engineer: <OrgAddr1>	
Size: Custom	Project Name: IMBM-H81C	Rev: 1.00
Date: Tuesday, October 31, 2017	Sheet 74 of 78	

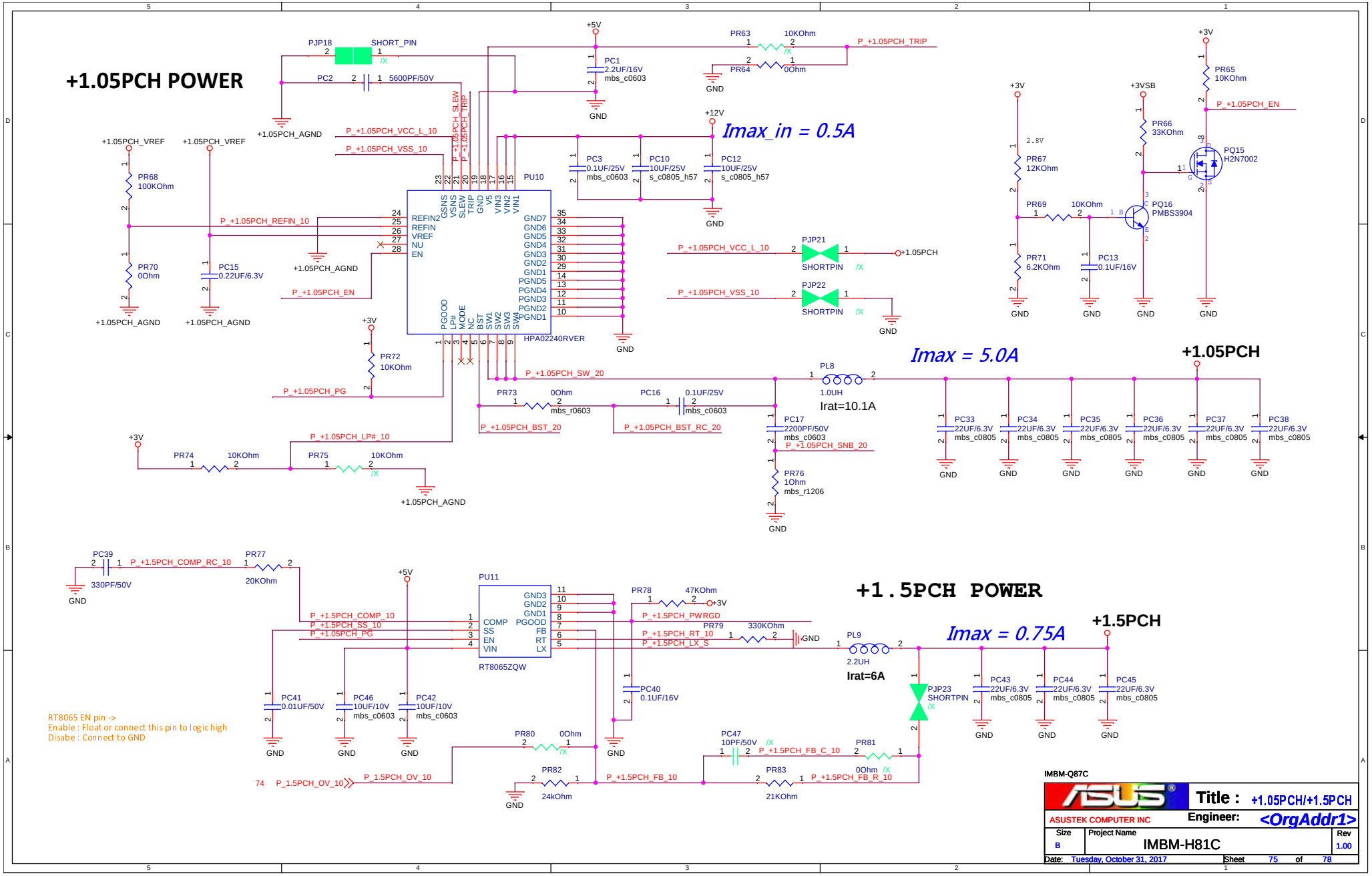
+1.05PCH POWER
Imax_in = 0.5A
Imax = 5.0A
+1.05PCH
+1.5PCH POWER
Imax = 0.75A
+1.5PCH
Irat=10.1A
Irat=6A
PU10
HPA02240RVER
PU11
RT8065ZQW
PQ15
H2N7002
PQ16
PMBS3904
PJP18
SHORT_PIN
PJP21
PJP22
PJP23
SHORTPIN
PL8
1.0UH
PL9
2.2UH
RT8065 EN pin ->
Enable : Float or connect this pin to logic high
Disabe : Connect to GND
IMBM-Q87C
Title : +1.05PCH/+1.5PCH
ASUSTEK COMPUTER INC
Engineer: <OrgAddr1>
Size B
Project Name IMBM-H81C
Rev 1.00
Date: Tuesday, October 31, 2017
Sheet 75 of 78

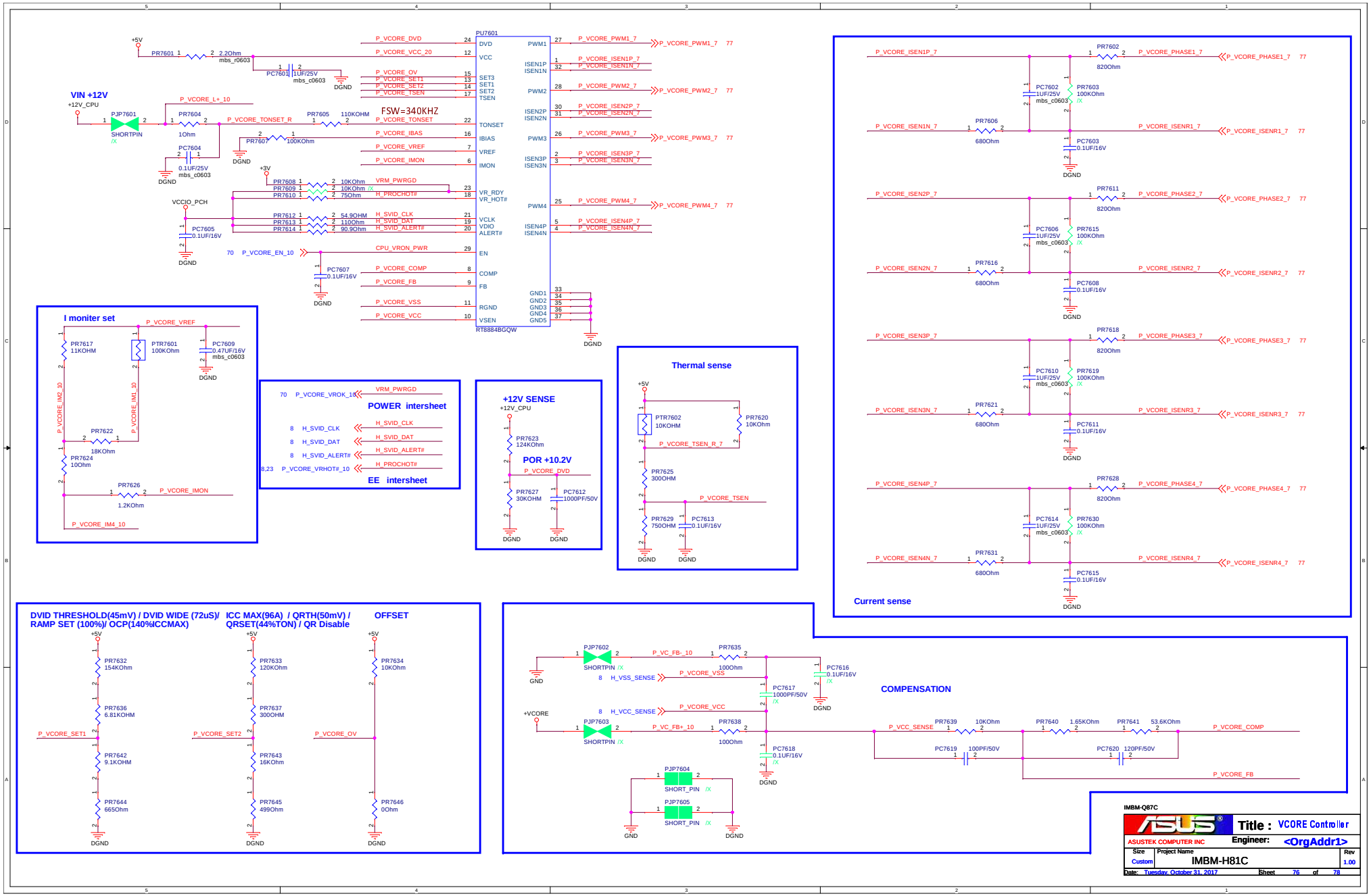
PU7601
RT8884BGQW
FSW=340KHZ
VIN +12V
+12V_CPU
PJP7601
SHORTPIN
PR7604
1Ohm
PC7604
0.1UF/25V
mbs_c0603
PR7601
2.2Ohm
mbs_0603
PC7601
1UF/25V
mbs_c0603
PR7605
110KOHM
PR7607
100KOHM
PR7608
10KOhm
PR7609
10KOhm
PR7610
75Ohm
PR7612
54.9OHM
PR7613
110Ohm
PR7614
90.9Ohm
PC7605
0.1UF/16V
PC7607
0.1UF/16V
VCCIO_PCH
+3V
+5V
DGND
P_VCORE_DVD
P_VCORE_VCC_20
P_VCORE_OV
P_VCORE_SET1
P_VCORE_SET2
P_VCORE_TSEN
P_VCORE_L+_10
P_VCORE_TONSET_R
P_VCORE_TONSET
P_VCORE_IBAS
P_VCORE_VREF
P_VCORE_IMON
VRM_PWRGD
H_PROCHOT#
H_SVID_CLK
H_SVID_DAT
H_SVID_ALERT#
CPU_VRON_PWR
P_VCORE_EN_10
P_VCORE_COMP
P_VCORE_FB
P_VCORE_VSS
P_VCORE_VCC
P_VCORE_PWM1_7
P_VCORE_ISEN1P_7
P_VCORE_ISEN1N_7
P_VCORE_PWM2_7
P_VCORE_ISEN2P_7
P_VCORE_ISEN2N_7
P_VCORE_PWM3_7
P_VCORE_ISEN3P_7
P_VCORE_ISEN3N_7
P_VCORE_PWM4_7
P_VCORE_ISEN4P_7
P_VCORE_ISEN4N_7
I moniter set
PR7617
11KOHM
PTR7601
100KOhm
PC7609
0.47UF/16V
mbs_c0603
PR7622
18KOhm
PR7624
10Ohm
PR7626
1.2KOhm
P_VCORE_IMON
P_VCORE_IM4_10
P_VCORE_IM2_10
P_VCORE_IM1_10
POWER intersheet
EE intersheet
+12V SENSE
PR7623
124KOhm
POR +10.2V
PR7627
30KOHM
PC7612
1000PF/50V
Thermal sense
PTR7602
10KOHM
PR7620
10KOhm
P_VCORE_TSEN_R_7
PR7625
300OHM
P_VCORE_TSEN
PR7629
750OHM
PC7613
0.1UF/16V
Current sense
PR7602
820Ohm
PR7603
100KOhm
PC7602
1UF/25V
mbs_c0603
PR7606
680Ohm
PC7603
0.1UF/16V
PR7611
820Ohm
PR7615
100KOhm
PC7606
1UF/25V
mbs_c0603
PR7616
680Ohm
PC7608
0.1UF/16V
PR7618
820Ohm
PR7619
100KOhm
PC7610
1UF/25V
mbs_c0603
PR7621
680Ohm
PC7611
0.1UF/16V
PR7628
820Ohm
PR7630
100KOhm
PC7614
1UF/25V
mbs_c0603
PR7631
680Ohm
PC7615
0.1UF/16V
P_VCORE_PHASE1_7
P_VCORE_ISENR1_7
P_VCORE_PHASE2_7
P_VCORE_ISENR2_7
P_VCORE_PHASE3_7
P_VCORE_ISENR3_7
P_VCORE_PHASE4_7
P_VCORE_ISENR4_7
DVID THRESHOLD(45mV) / DVID WIDE (72uS)/ RAMP SET (100%)/ OCP(140%ICCMAX)
ICC MAX(96A) / QRTH(50mV) / QRSET(44%TON) / QR Disable
OFFSET
PR7632
154KOhm
PR7636
6.81KOHM
PR7642
9.1KOHM
PR7644
665Ohm
PR7633
120KOhm
PR7637
300OHM
PR7643
16KOhm
PR7645
499Ohm
PR7634
10KOhm
PR7646
0Ohm
P_VCORE_SET1
P_VCORE_SET2
P_VCORE_OV
COMPENSATION
PJP7602
SHORTPIN
PR7635
100Ohm
PC7616
0.1UF/16V
PC7617
1000PF/50V
PJP7603
PR7638
100Ohm
PC7618
0.1UF/16V
PJP7604
SHORT_PIN
PJP7605
P_VC_FB-_10
P_VC_FB+_10
H_VSS_SENSE
H_VCC_SENSE
P_VCORE_VSS
P_VCORE_VCC
+VCORE
GND
P_VCC_SENSE
PR7639
10KOhm
PR7640
1.65KOhm
PR7641
53.6KOhm
PC7619
100PF/50V
PC7620
120PF/50V
P_VCORE_COMP
P_VCORE_FB
IMBM-Q87C
Title : VCORE Controller
ASUSTEK COMPUTER INC
Engineer: <OrgAddr1>
Size Custom
Project Name IMBM-H81C
Rev 1.00
Date: Tuesday, October 31, 2017
Sheet 76 of 78

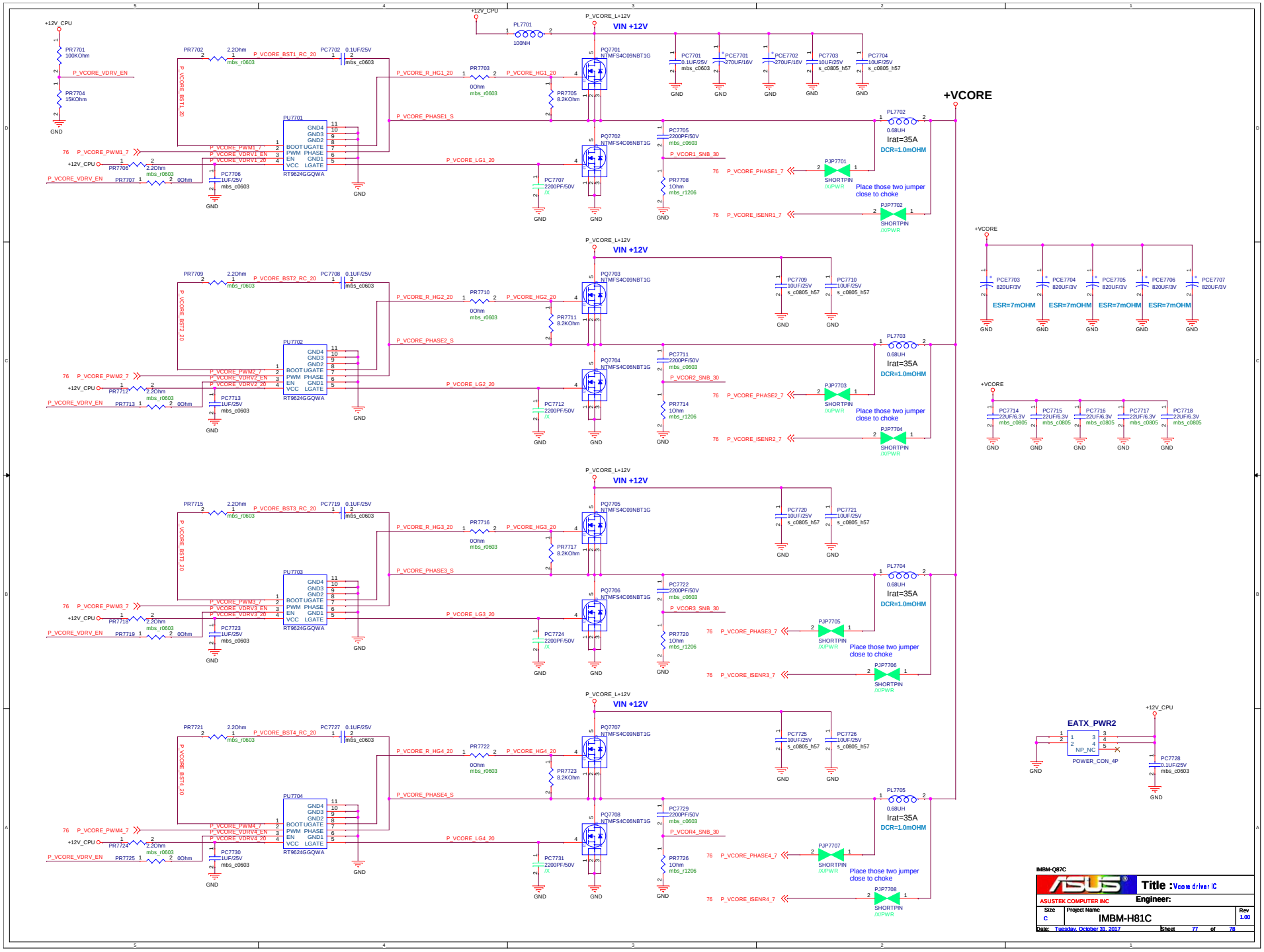
+12V_CPU
PR7701 100KOhm
P_VCORE_VDRV_EN
PR7704 15KOhm
GND
PR7702 2.2Ohm mbs_r0603
PC7702 0.1UF/25V mbs_c0603
P_VCORE_BST1_RC_20
P_VCORE_BST1_20
PU7701 RT9624GGQWA
GND4 GND3 GND2 BOOT UGATE PWM PHASE EN GND1 VCC LGATE
76 P_VCORE_PWM1_7
P_VCORE_VDRV1_EN
P_VCORE_VDRV1_20
PR7706 2.2Ohm mbs_r0603
PR7707 0Ohm
PC7706 1UF/25V mbs_c0603
P_VCORE_R_HG1_20
PR7703 0Ohm mbs_r0603
P_VCORE_HG1_20
PR7705 8.2KOhm
P_VCORE_PHASE1_S
P_VCORE_LG1_20
PC7707 2200PF/50V /X
PL7701 100NH
P_VCORE_L+12V
VIN +12V
PQ7701 NTMFS4C09NBT1G
PQ7702 NTMFS4C06NBT1G
PC7701 0.1UF/25V mbs_c0603
PCE7701 270UF/16V
PCE7702 270UF/16V
PC7703 10UF/25V s_c0805_h57
PC7704 10UF/25V s_c0805_h57
PC7705 2200PF/50V mbs_c0603
P_VCOR1_SNB_30
PR7708 1Ohm mbs_r1206
76 P_VCORE_PHASE1_7
76 P_VCORE_ISENR1_7
PJP7701 SHORTPIN /X/PWR
PJP7702 SHORTPIN /X/PWR
Place those two jumper close to choke
PL7702 0.68UH Irat=35A DCR=1.0mOHM
+VCORE
PR7709 2.2Ohm mbs_r0603
PC7708 0.1UF/25V mbs_c0603
P_VCORE_BST2_RC_20
P_VCORE_BST2_20
PU7702 RT9624GGQWA
76 P_VCORE_PWM2_7
P_VCORE_VDRV2_EN
P_VCORE_VDRV2_20
PR7712 2.2Ohm mbs_r0603
PR7713 0Ohm
PC7713 1UF/25V mbs_c0603
P_VCORE_R_HG2_20
PR7710 0Ohm mbs_r0603
P_VCORE_HG2_20
PR7711 8.2KOhm
P_VCORE_PHASE2_S
P_VCORE_LG2_20
PC7712 2200PF/50V /X
PQ7703 NTMFS4C09NBT1G
PQ7704 NTMFS4C06NBT1G
PC7709 10UF/25V s_c0805_h57
PC7710 10UF/25V s_c0805_h57
PC7711 2200PF/50V mbs_c0603
P_VCOR2_SNB_30
PR7714 1Ohm mbs_r1206
76 P_VCORE_PHASE2_7
76 P_VCORE_ISENR2_7
PJP7703 SHORTPIN /X/PWR
PJP7704 SHORTPIN /X/PWR
PL7703 0.68UH Irat=35A DCR=1.0mOHM
PCE7703 820UF/3V
PCE7704 820UF/3V
PCE7705 820UF/3V
PCE7706 820UF/3V
PCE7707 820UF/3V
ESR=7mOHM
PC7714 22UF/6.3V mbs_c0805
PC7715 22UF/6.3V mbs_c0805
PC7716 22UF/6.3V mbs_c0805
PC7717 22UF/6.3V mbs_c0805
PC7718 22UF/6.3V mbs_c0805
PR7715 2.2Ohm mbs_r0603
PC7719 0.1UF/25V mbs_c0603
P_VCORE_BST3_RC_20
P_VCORE_BST3_20
PU7703 RT9624GGQWA
76 P_VCORE_PWM3_7
P_VCORE_VDRV3_EN
P_VCORE_VDRV3_20
PR7718 2.2Ohm mbs_r0603
PR7719 0Ohm
PC7723 1UF/25V mbs_c0603
P_VCORE_R_HG3_20
PR7716 0Ohm mbs_r0603
P_VCORE_HG3_20
PR7717 8.2KOhm
P_VCORE_PHASE3_S
P_VCORE_LG3_20
PC7724 2200PF/50V /X
PQ7705 NTMFS4C09NBT1G
PQ7706 NTMFS4C06NBT1G
PC7720 10UF/25V s_c0805_h57
PC7721 10UF/25V s_c0805_h57
PC7722 2200PF/50V mbs_c0603
P_VCOR3_SNB_30
PR7720 1Ohm mbs_r1206
76 P_VCORE_PHASE3_7
76 P_VCORE_ISENR3_7
PJP7705 SHORTPIN /X/PWR
PJP7706 SHORTPIN /X/PWR
PL7704 0.68UH Irat=35A DCR=1.0mOHM
PR7721 2.2Ohm mbs_r0603
PC7727 0.1UF/25V mbs_c0603
P_VCORE_BST4_RC_20
P_VCORE_BST4_20
PU7704 RT9624GGQWA
76 P_VCORE_PWM4_7
P_VCORE_VDRV4_EN
P_VCORE_VDRV4_20
PR7724 2.2Ohm mbs_r0603
PR7725 0Ohm
PC7730 1UF/25V mbs_c0603
P_VCORE_R_HG4_20
PR7722 0Ohm mbs_r0603
P_VCORE_HG4_20
PR7723 8.2KOhm
P_VCORE_PHASE4_S
P_VCORE_LG4_20
PC7731 2200PF/50V /X
PQ7707 NTMFS4C09NBT1G
PQ7708 NTMFS4C06NBT1G
PC7725 10UF/25V s_c0805_h57
PC7726 10UF/25V s_c0805_h57
PC7729 2200PF/50V mbs_c0603
P_VCOR4_SNB_30
PR7726 1Ohm mbs_r1206
76 P_VCORE_PHASE4_7
76 P_VCORE_ISENR4_7
PJP7707 SHORTPIN /X/PWR
PJP7708 SHORTPIN /X/PWR
PL7705 0.68UH Irat=35A DCR=1.0mOHM
EATX_PWR2
NP_NC
POWER_CON_4P
PC7728 0.1UF/25V mbs_c0603
IMBM-Q87C
Title : Vcore driver IC
ASUSTEK COMPUTER INC
Engineer:
Size C
Project Name IMBM-H81C
Rev 1.00
Date: Tuesday, October 31, 2017
Sheet 77 of 78

History 2015/09/11 R1.01

01)Page 34, Change LAN2_USB2_23 and add L2R16.
02)Page 56 OR51 mount
03)Page 28: Change GU403 to 06106-00200000
04)Page 32: Add L1C20,Delete L1R16 and L1C22.
05)Page 50:Add YR1
06)Page 42: Add RT8065 to replace LDO solution
07)Page 48: Change Y1U1 of part number 06122-00020000

History 2015/11/18 R1.02

01)Page 38, Change OR85 200 ohm, Reserve WR36.
02)Page 32, Change OR84 200 ohm, Reserve WR37.
03)Page 56: Fix F_PANEL related circuit.And add RR15.
04)Page 55: Fix CPU FAN for lever shifter.
05)Page 31:Add L1C7,L1C6,L1C17.
06)Page 33: Add L2C7,L2C6,L2C17.
07)Page 29: Swap +5V and +5V_D_VGA, Add RGB and HV CAP for EMI.
08)Page 30: Swap +5V and +5V_D_VGA, Add RGB and HV CAP for EMI.
09)Page 39: Add UR265, UR266
10)Page 25: Add FU1
11)Page 54:Change OR82 to 750
12)Page 75:Add CC4
13)Page 73:Add RR13 and RR14
14)Page 46:Change AMR13 to 51K.
15)Page 47:Change AMR2 to 51K.

History 2014/10/14

01)Swap Pins for Layout request
SRP1,ULA201,ULB201,GLX350~GLX353
02)Add SR147~SR165
Del SRN8,SRN12,SRN13,SRN15,SRN19
03)Change net
SR72.2 to S_LDRQ0#
04)Change net
SC36.2 to CK_33M_COM1
05)Add SR289 (S_GP18/EN_RS422#)
Add SR290 (S_GP20/EN_RS485#)
Del R96 (CLK_RUN#)

History 2014/10/15

01)Add SR294~SR296,FR16~FR18,SR300~SR307
Del SRN16,FRN1,SRP1

29)Capacitors Rating follow Aaeon
PC?

<Variant Name>

ASUS	Title : History	
ASUSTek COMPUTER INC.	Engineer: <OrgAddr1>	
Size A3	Project Name IMBM-H81C	Rev 1.00
Date: Tuesday, October 31, 2017	Sheet 78 of 78	