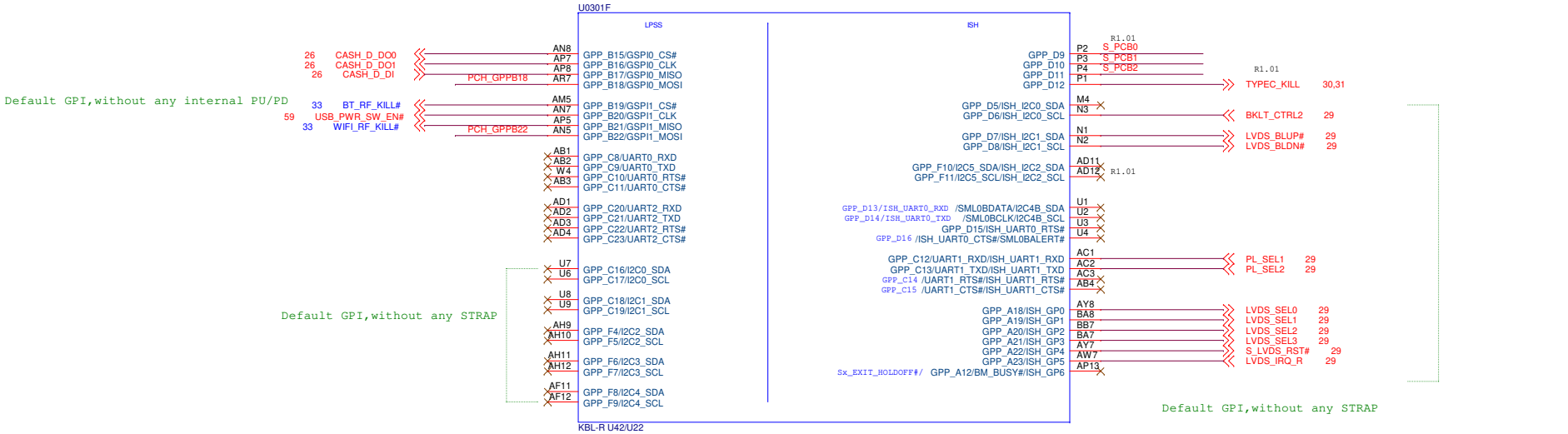

Rising edge of PCH_PWROK

Boot BIOS Strap Bit BBS

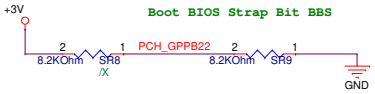

GPP_B22: weak internal pull down	
PU	LPC
PD	SPI(Default)(Selected)

Rising edge of PCH_PWROK

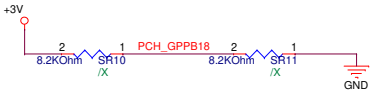

GPP_B18: weak internal pull down	
PU	Enable "No Reboot" mode,useful when runing XDP
PD	Disable "No Reboot" mode. (Default)(Selected)

PCB_ID

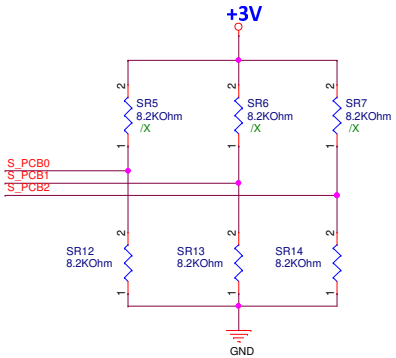

<Variant Name> CPU_CFG,RSVD,GND

ASUSTeK COMPUTER INC.

Title :

Engineer: Allen_Huang

Size	Project Name	Rev
A3	EVN-KLU	1.00

Date: Tuesday, October 09, 2018 Sheet 15 of 62

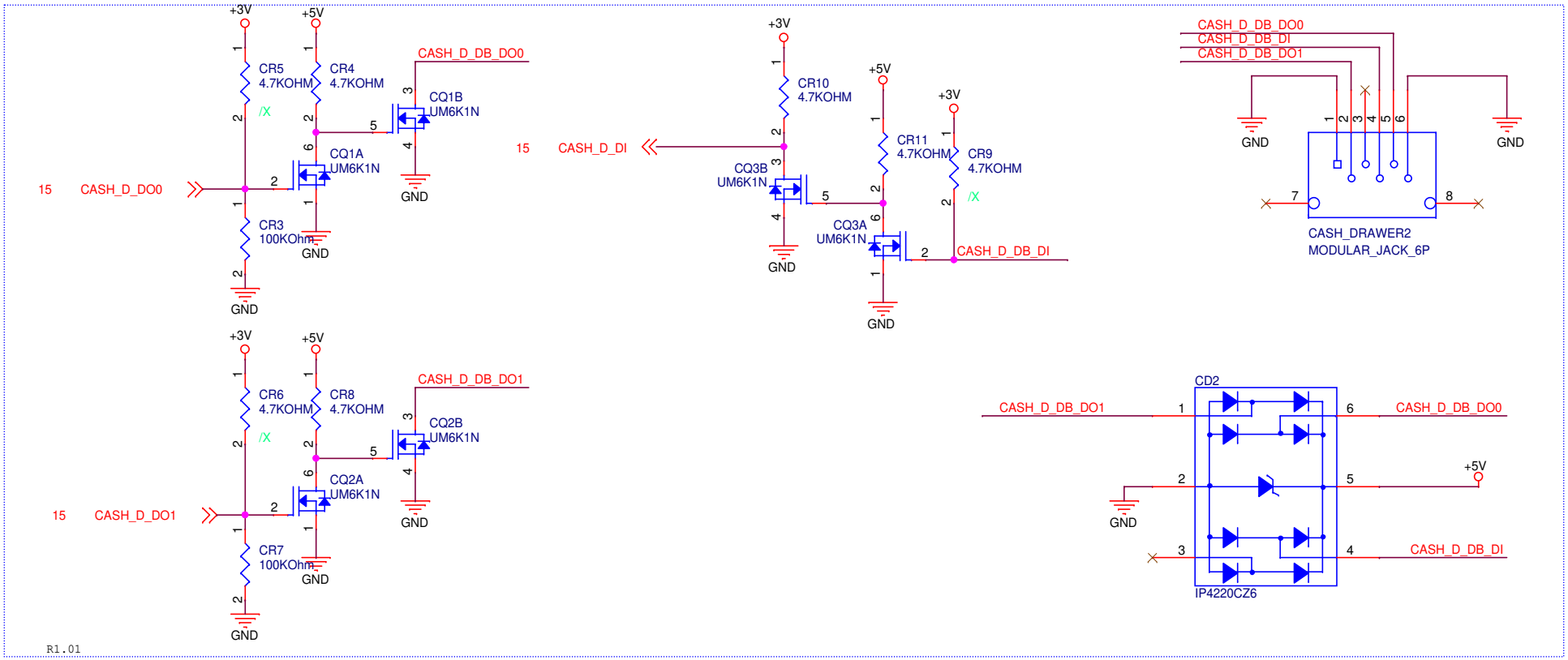

PWRBTN#

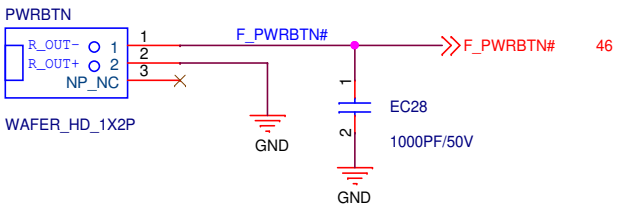

<Variant Name>

ASUS	Title : FRONT PANEL		
ASUSTEK COMPUTER INC	Engineer: <OrgAddr1>		
Size A4	Project Name EVN-KLU		Rev 1.00
Date: Tuesday, October 09, 2018	Sheet 26 of 62		