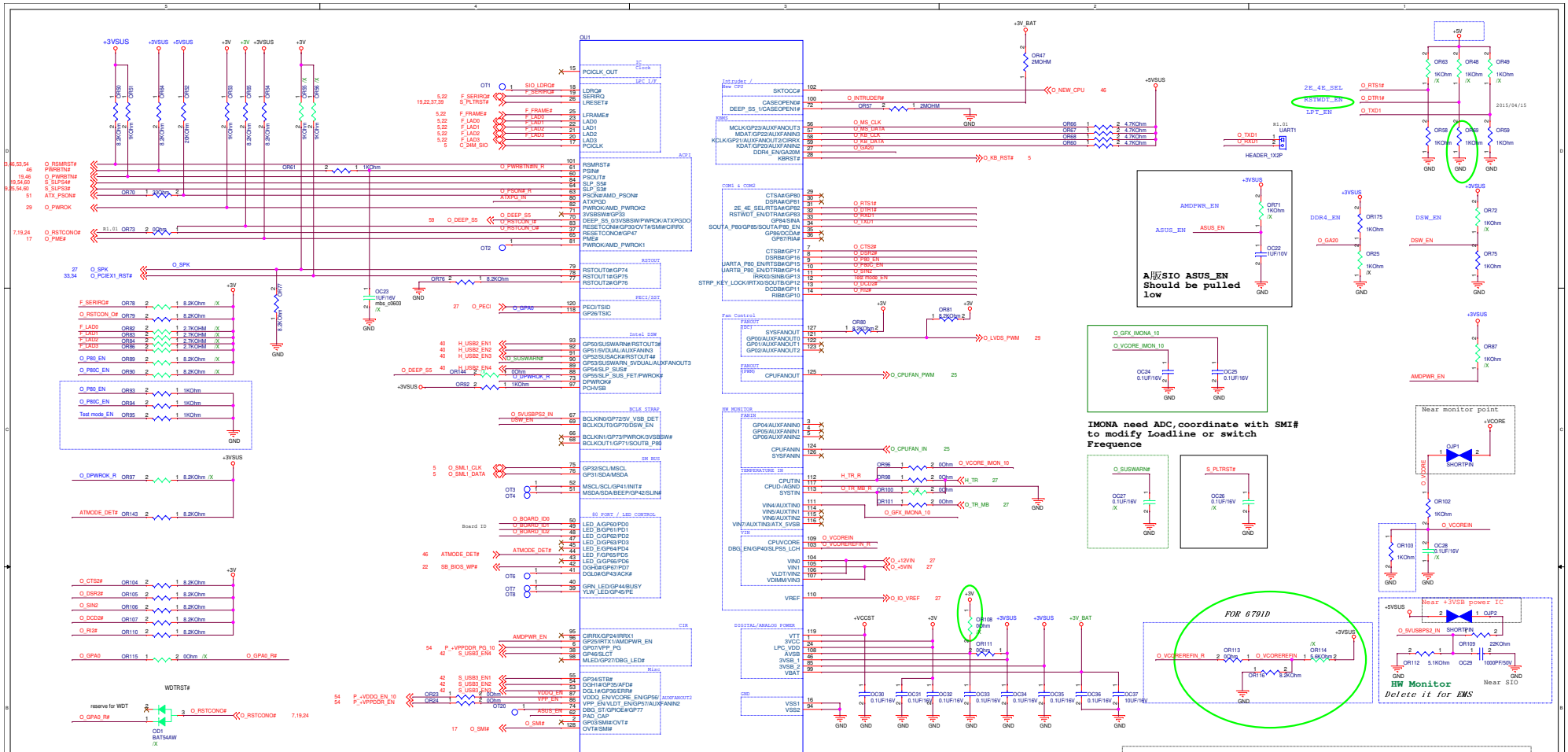

POWER ON STRAPPING PIN NCT6791D

PIN	Name	0	1	Power	Description
31	2E_4E_SEL	2E	4E	VCC	I/O Configuration Address
32	24_48_SEL	24M clock source	48M clock source	VCC	Clock Source Selection
34	LPT_EN	Disable LPT	Enable LPT	VCC	LPT OR OTHERS
62	ASUS_EN	Disable ASUS ASIC	Enable ASUS ASIC	VSB	ASUS GLUE LOGIC
69	DSW_EN	DISABLE INTEL DSW	ENABLE INTEL DSW	VSB	DSW OR SVID FUNCTION
71	ANTISURGE_EN	DISABLE ANTISURGE FUNCTION	ENABLE ANTISURGE FUNCTION	VSB	ANTISURGE FUNCTION
96	AMDPWR_EN	DISABLE AMD PWR SEQ	ENABLE AMD PWR SEQ	VSB	AMD SEQ OR PVID FUNCTION

<Variant Name>

ASUSTEK COMPUTER INC

Title : NCT6793D

Engineer: <OrgAddr1>

Size: Custom | Project Name: EVN-KLU | Rev: 1.00

Date: Tuesday, October 09, 2018 | Sheet 24 of 62

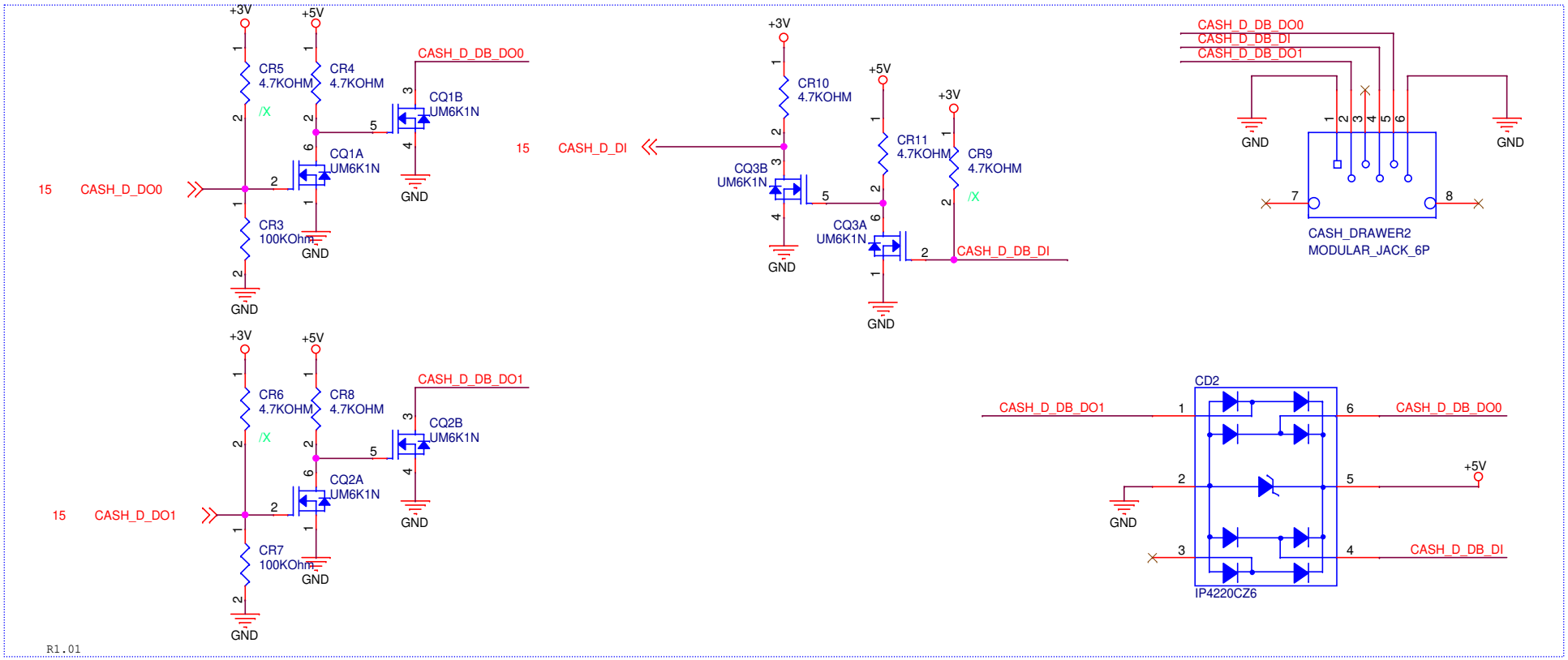

PWRBTN#

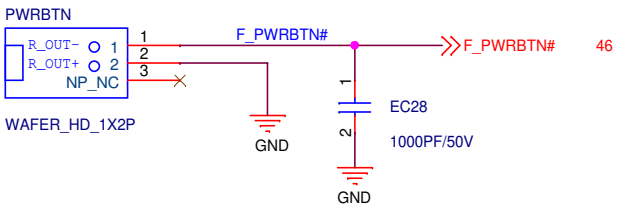

<Variant Name>

ASUS	Title : FRONT PANEL		
ASUSTEK COMPUTER INC	Engineer: <OrgAddr1>		
Size A4	Project Name EVN-KLU		Rev 1.00
Date: Tuesday, October 09, 2018	Sheet 26 of 62		