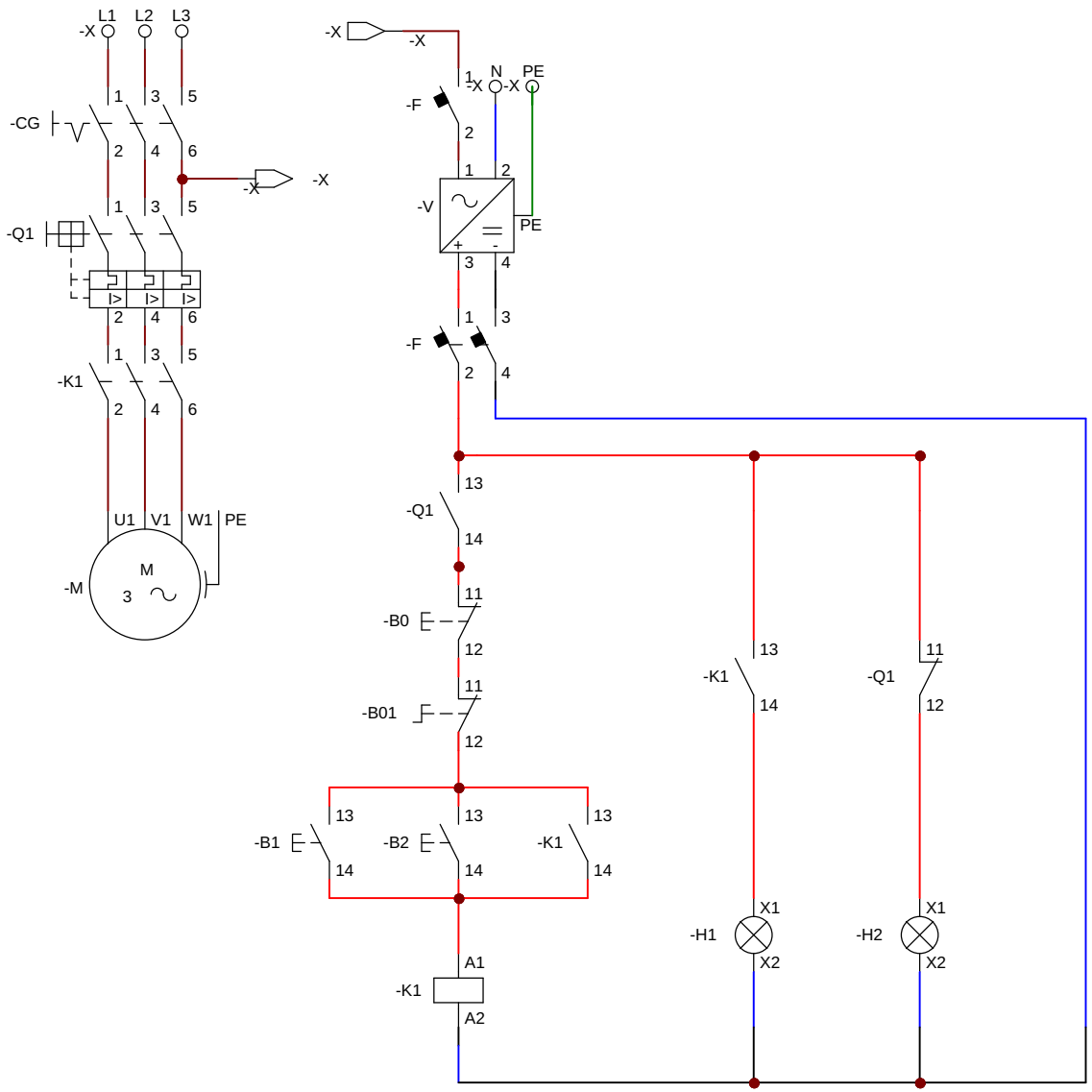

	Date	Name	Signature	Designed by	Título	Date 19-Mai-2023	Page: 1 de 1
Drawn	18/05/2023	Lucas C.		SENAI	Furadeira	File:	
Drawn							