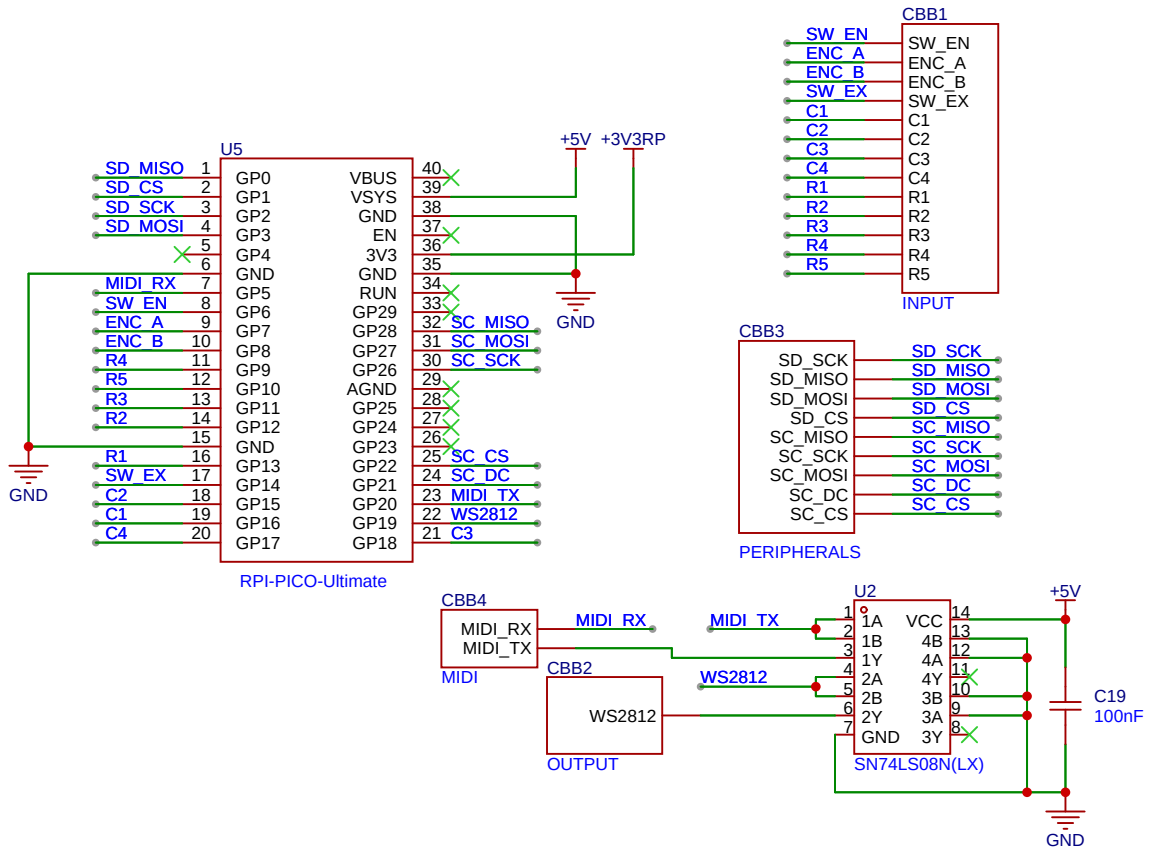

Schematic	MAIN	Create at	2025-08-25
		Update at	2025-09-04
Board	Secuenciador	Page	P1
Drawn		Secuenciador	
Reviewed			
		Version	Size	Page 1 Total 1
EasyEDA		V1.0	A4	EasyEDA.com