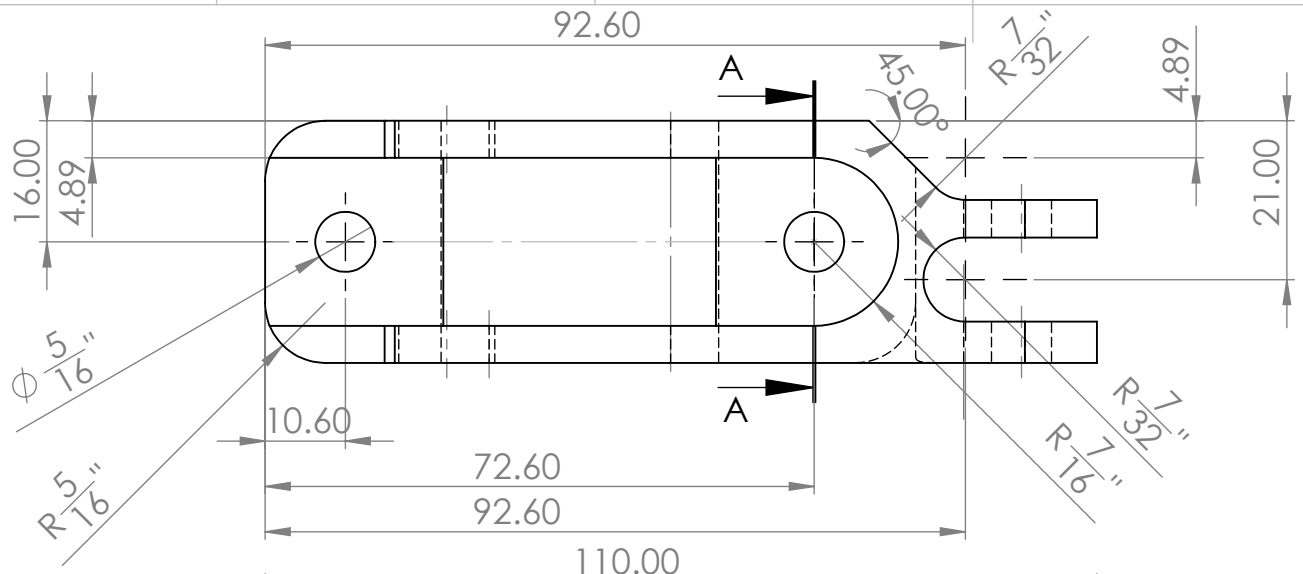

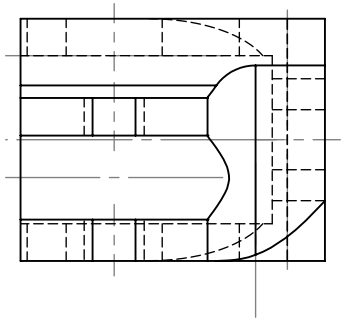

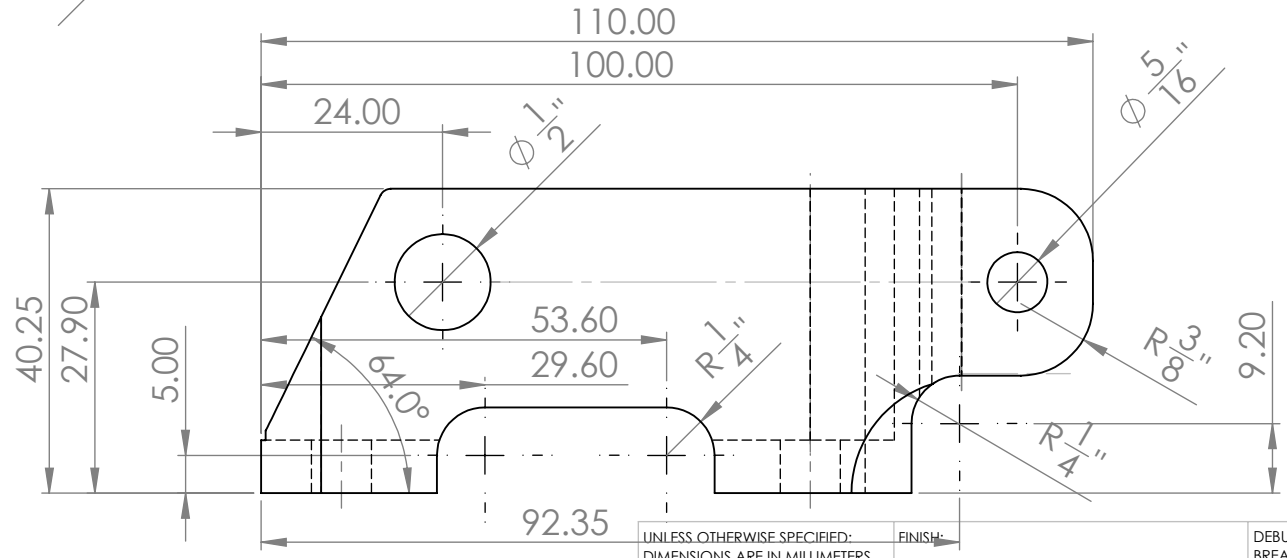

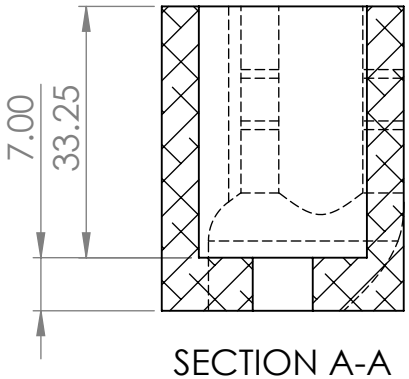

SECTION A-A

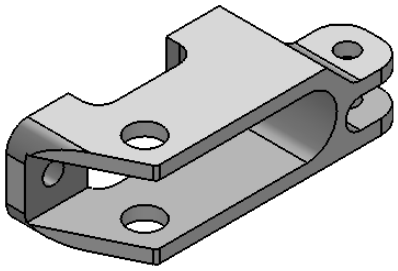

UNLESS OTHERWISE SPECIFIED: DIMENSIONS ARE IN MILLIMETERS SURFACE FINISH: TOLERANCES: LINEAR: ANGULAR:	FINISH:			DEBUR AND BREAK SHARP EDGES	
	REVISION	1.0			
	NAME	SIGNATURE	DATE		
DRAWN	JJLudemann		22 Nov 12		
CHK'D					
APPV'D					
MFG					
Q.A					
MATERIAL: Aluminum Alloy 6061-T6					
WEIGHT:					

Ludemann Engineering

TITLE:

SteeringArmLeft

DWG NO. 01-202-0011

A4

SCALE:1:1

SHEET 1 OF 1