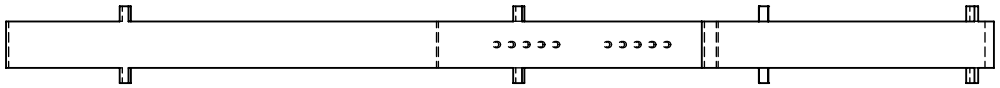

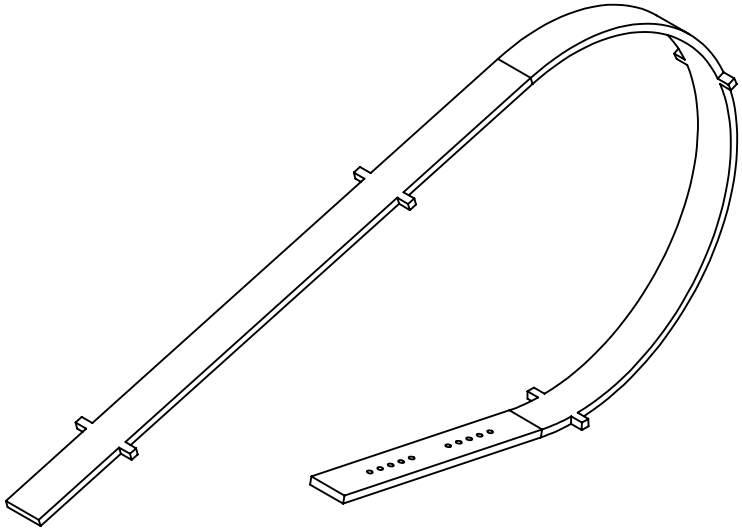

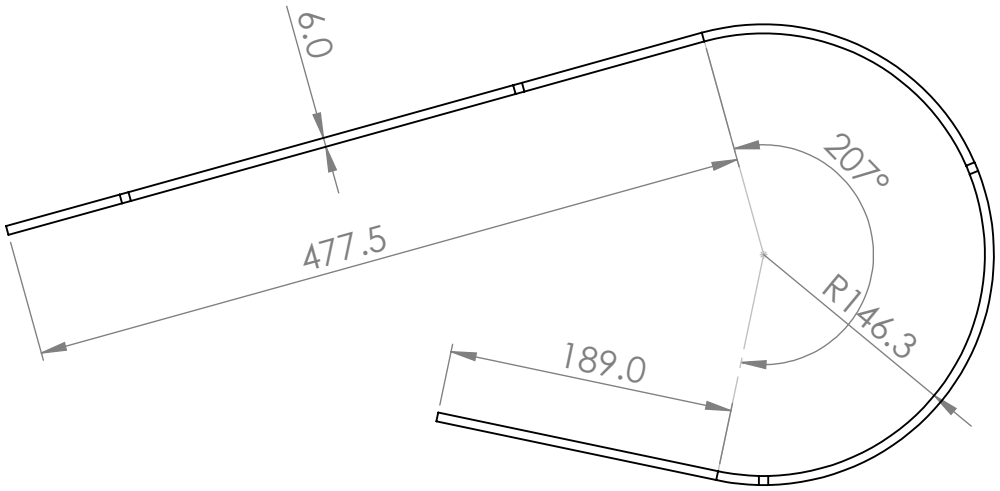

UNLESS OTHERWISE SPECIFIED: DIMENSIONS ARE IN MILLIMETERS SURFACE FINISH: TOLERANCES: LINEAR: ANGULAR:	FINISH: REVISION 1.0				DEBUR AND BREAK SHARP EDGES	Ludemann Engineering
	NAME	SIGNATURE	DATE			TITLE:
DRAWN	JJLudemann		22 Sep 2013			ChainGuard1
CHK'D						
APPV'D						
MFG						
Q.A				MATERIAL: Aluminum Alloy, Generic		DWG NO. 01-501-0016 A4
				WEIGHT:		SCALE:1:5 SHEET 1 OF 2

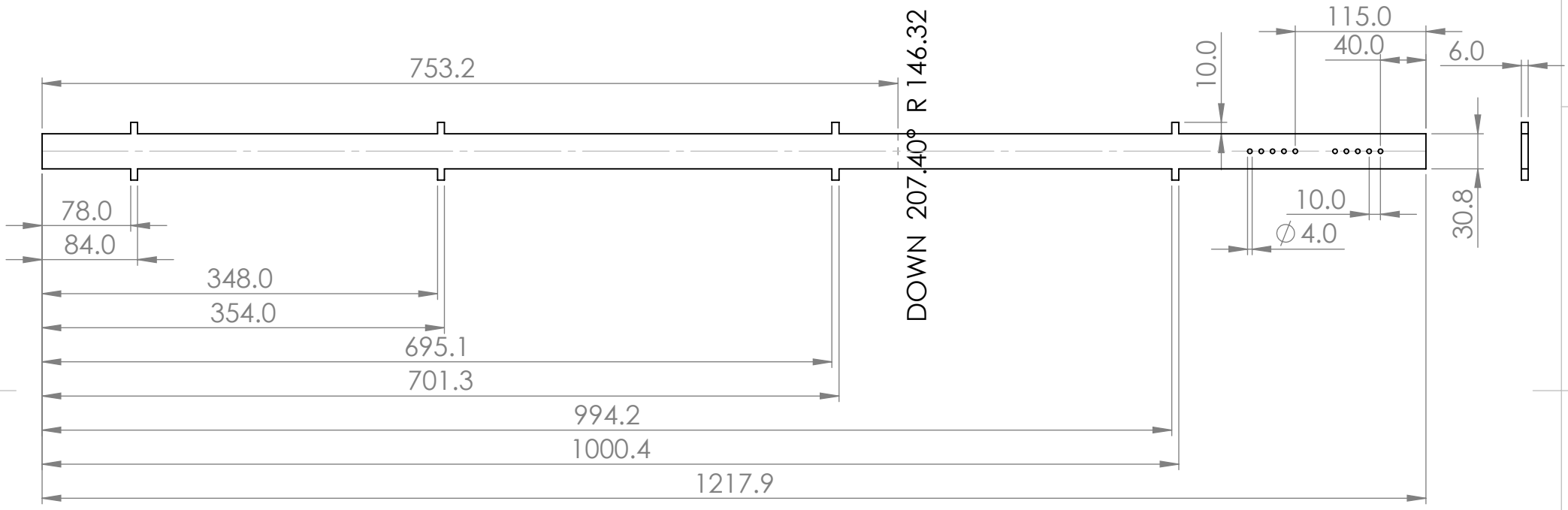

UNLESS OTHERWISE SPECIFIED: DIMENSIONS ARE IN MILLIMETERS SURFACE FINISH: TOLERANCES: LINEAR: ANGULAR:	FINISH: REVISION 1.0			DEBUR AND BREAK SHARP EDGES	
	NAME	SIGNATURE	DATE		
DRAWN	JJLudemann		22 Sep 2013		
CHK'D					
APPV'D					
MFG					
Q.A					

TITLE:

ChainGuard1

MATERIAL:

Aluminum Alloy, Generic

WEIGHT:

DWG NO. 01-501-0016

A4

SCALE:1:5

SHEET 2 OF 2