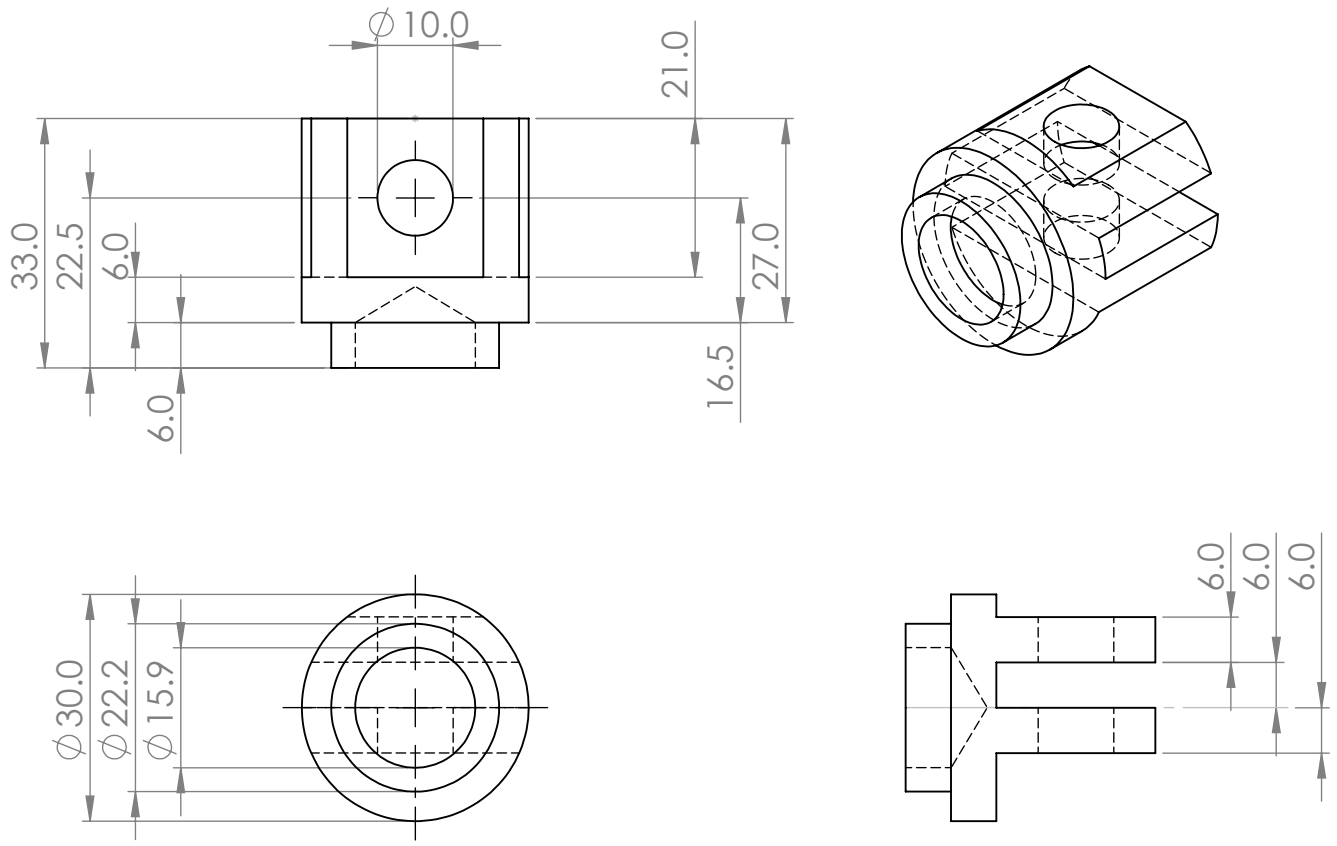

UNLESS OTHERWISE SPECIFIED: DIMENSIONS ARE IN MILLIMETERS SURFACE FINISH: TOLERANCES: LINEAR: ANGULAR:	FINISH:			DEBUR AND BREAK SHARP EDGES	
	REVISION 1.0				
	NAME	SIGNATURE	DATE		
DRAWN	JJLudemann		26 Feb 2014		
CHK'D					
APPV'D					
MFG					
Q.A				MATERIAL:	
				WEIGHT:	

TITLE:

TubeRemoveJoint

DWG NO. 01-120-0003

A4

SCALE:1:1

SHEET 1 OF 1