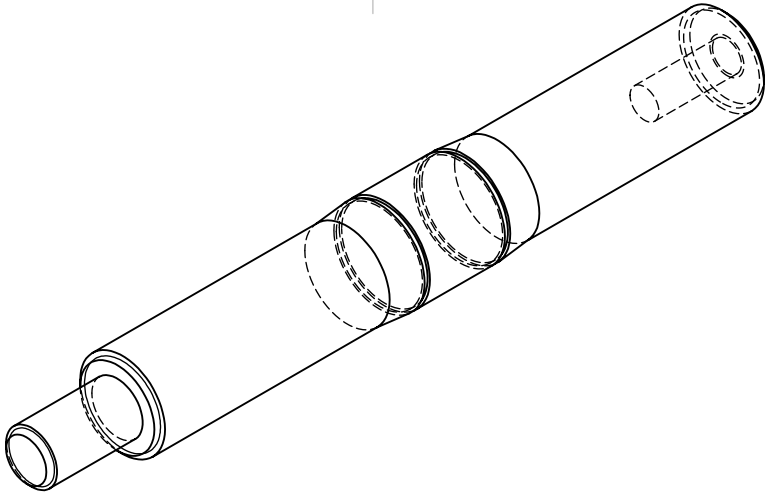

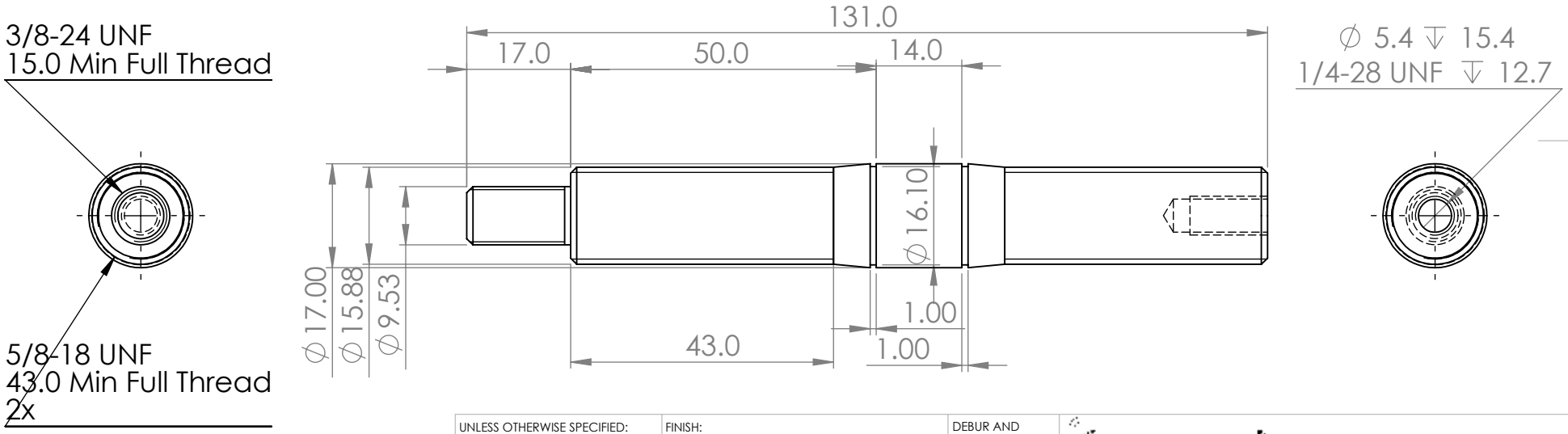

UNLESS OTHERWISE SPECIFIED: DIMENSIONS ARE IN MILLIMETERS SURFACE FINISH: TOLERANCES: LINEAR: ANGULAR:	FINISH:			DEBUR AND BREAK SHARP EDGES	
	REVISION 1.1				
	NAME	SIGNATURE	DATE		
DRAWN	JJLudemann		08 Nov 2014		
CHK'D					
APPV'D					
MFG					
Q.A				MATERIAL: Steel, 4130	
				WEIGHT:	

TITLE:

BiasAdjusterShaft

DWG NO. 01-930-0001

A4

SCALE:1:1

SHEET 1 OF 1