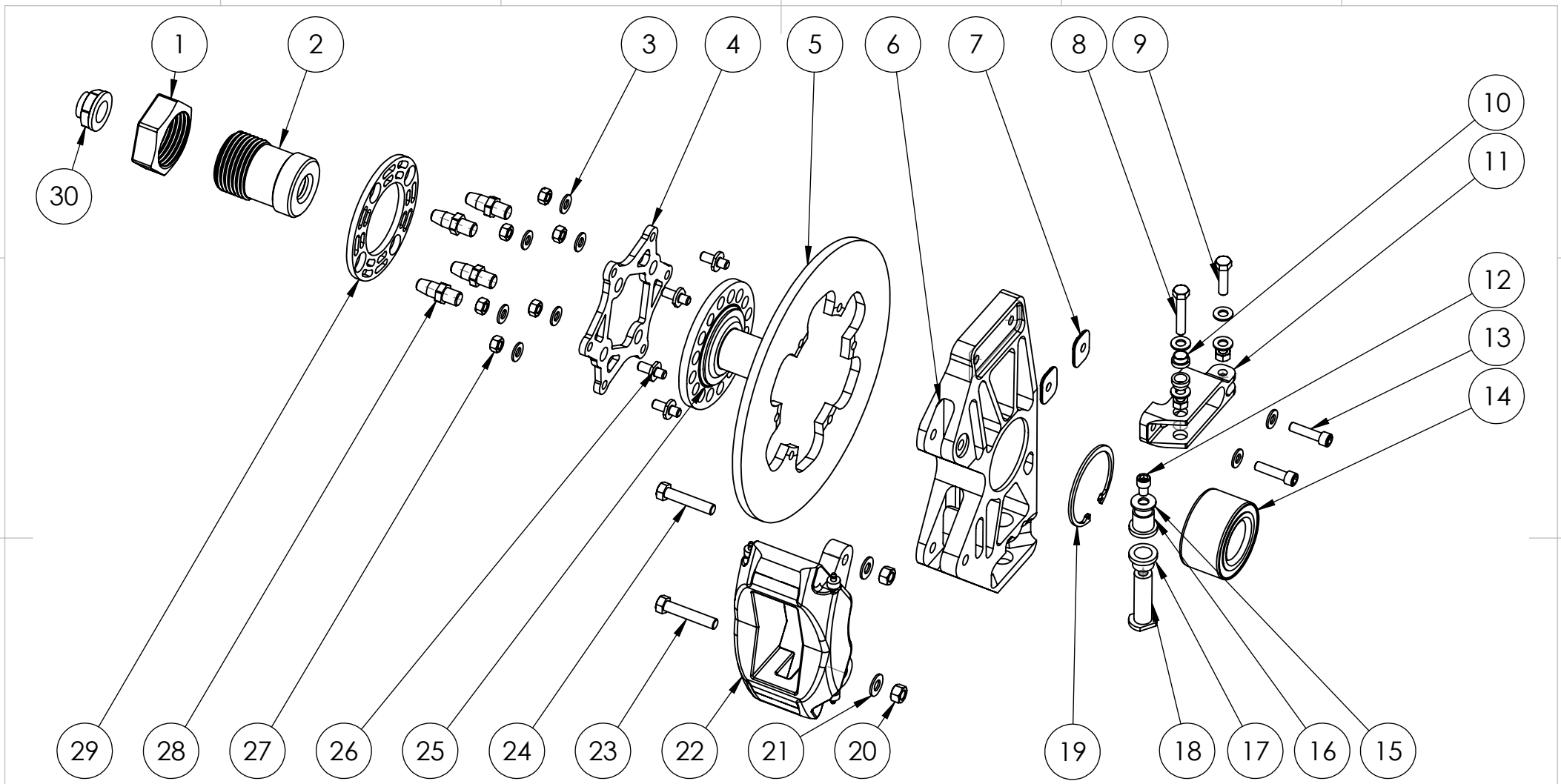

UNLESS OTHERWISE SPECIFIED: DIMENSIONS ARE IN MILLIMETERS SURFACE FINISH: TOLERANCES: LINEAR: ANGULAR:	FINISH: REVISION 1.0	DEBUR AND BREAK SHARP EDGES	

	NAME	SIGNATURE	DATE
DRAWN	JJLudemann		08 Aug 2013
CHK'D			
APPV'D			
MFG			
Q.A			

MATERIAL:

WEIGHT:

TITLE:

CornerLR_Complete

DWG NO. 01-222-0001

A4

SCALE:1:5

SHEET 1 OF 2

ITEM NO.	PART NUMBER	DESCRIPTION	Default/ QTY.
1	01-220-0007	WheelNut	1
2	01-220-0001	StubAxle	1
3	Preferred Narrow FW 0.3125		14
4	01-220-0005	AdapterWheelHubToDisc	1
5	01-302-0001	BrakeDiscWil160-10021	1
6	01-220-0013	UprightLFLugBillet	1
7	01-220-0010	SpacerSteeringArm3mm	2
8	HBOLT 0.3125-24x1.75x1.75-N		1
9	HBOLT 0.3125-24x1.25x1.25-N		1
10	01-220-0012	Bush437x500x345	2
11	01-220-0011L	SteeringArm (Right)	1
12	HX-SHCS 0.3125-24x0.4375x0.4375-N		1
13	HX-SHCS 0.3125-24x1.25x1.25-N		2
14	01-220-0016	BearingWheelCivicFront	1
15	Preferred Wide FW 0.3125		1
16	01-220-0009U	Bush16x19x4	1
17	01-220-0009L	Bush16x19x4	1
18	01-220-0008	Pin625	1
19	B27.7M - 3BM1-72		1
20	HNUT 0.3750-24-D-N		2
21	Preferred Narrow FW 0.375		4
22	01-312-0001	CaliperWilwood120-6818	1
23	HBOLT 0.375-24x2x1-N		1
24	HBOLT 0.375-24x1.875x1-N		1
25	01-220-0004	WheelHubHondaCivic	1
26	01-302-0002	StudDiscMntRear	6
27	HNUT 0.3125-24-D-N		10
28	01-220-0002	WheelDrivePin	4
29	01-220-0006	SpacerWheelHubToWheel	1
30	01-220-0017	NutHondaCivWhlBrngRet	1
31	TireRear		1
32	WheelRear1		1

UNLESS OTHERWISE SPECIFIED:
DIMENSIONS ARE IN MILLIMETERS
SURFACE FINISH:
TOLERANCES:
LINEAR:
ANGULAR:

FINISH:

DEBUR AND BREAK SHARP EDGES

DO NOT SCALE DRAWING

REVISION 1.0

	NAME	SIGNATURE	DATE
DRAWN	JJLudemann		08 Aug 2013
CHK'D			
APPV'D			
MFG			
Q.A			

TITLE:

MATERIAL:

WEIGHT:

DWG NO. 01-222-0001

A4

SCALE:1:5

SHEET 2 OF 2