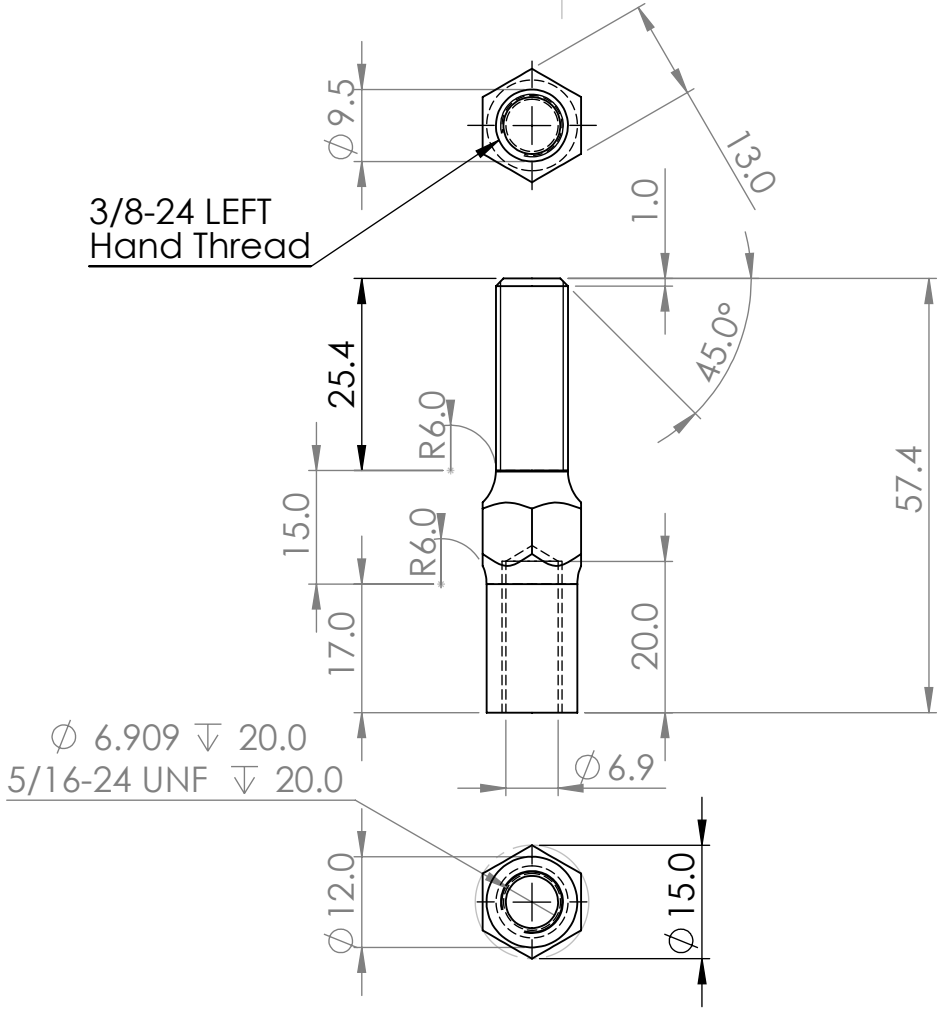

UNLESS OTHERWISE SPECIFIED: DIMENSIONS ARE IN MILLIMETERS SURFACE FINISH: TOLERANCES: LINEAR: ANGULAR:	FINISH: REVISION 0.0	DEBUR AND BREAK SHARP EDGES	Ludemann ENGINEERING		
	NAME	SIGNATURE	DATE	TITLE:	
DRAWN	JJLudemann		07 Jul 12	RodEndAdjuster312	
CHK'D					
APPV'D					
MFG					
Q.A			MATERIAL: Cold Rolled Steel 400 MPa	DWG NO. 01-201-0005	A4
			WEIGHT:	SCALE:1:1	SHEET 1 OF 1