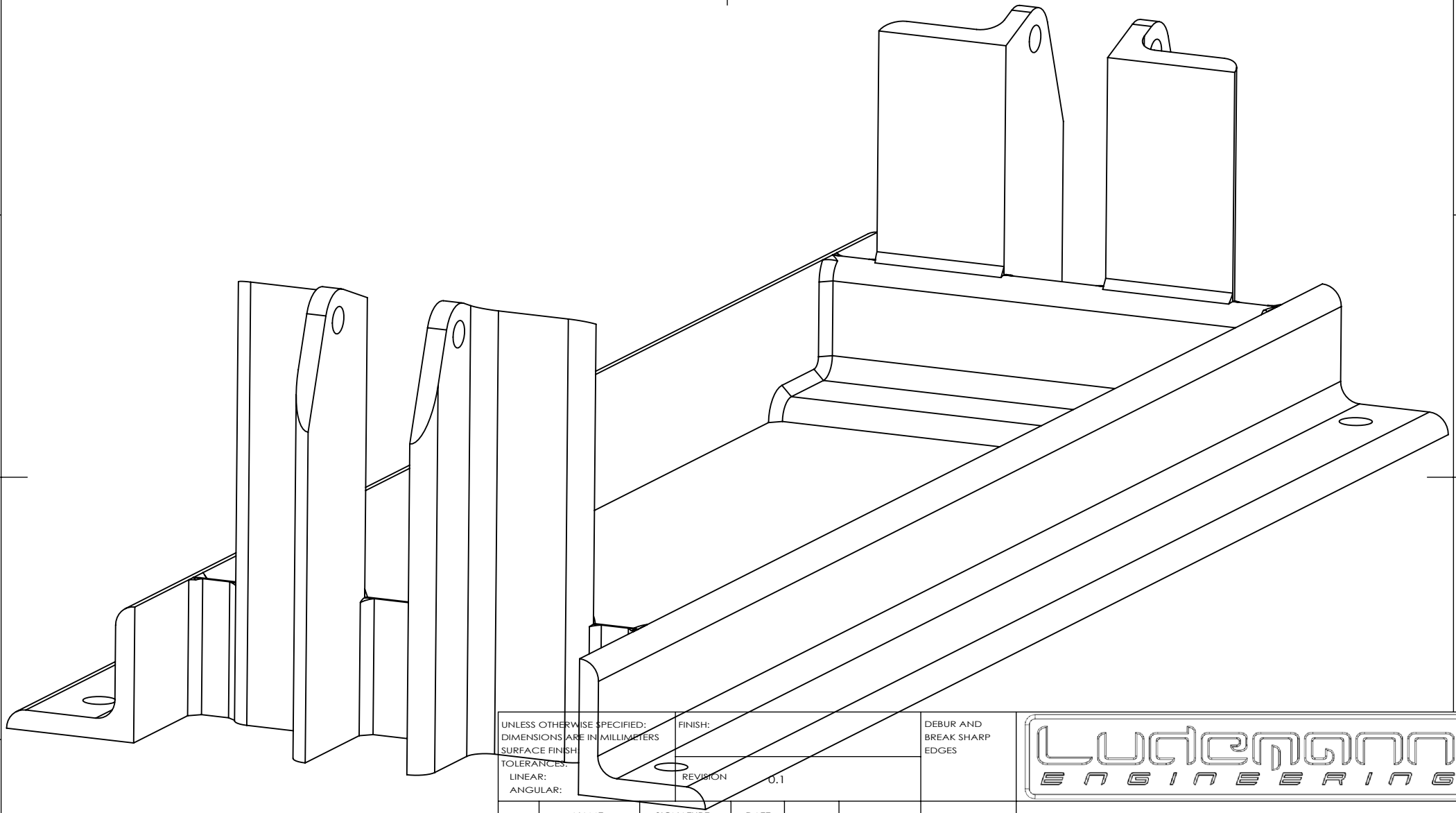

UNLESS OTHERWISE SPECIFIED: DIMENSIONS ARE IN MILLIMETERS SURFACE FINISH: TOLERANCES: LINEAR: ANGULAR:	FINISH:				DEBUR AND BREAK SHARP EDGES	Ludemann ENGINEERING
	REVISION 0.1					
	NAME	SIGNATURE	DATE			TITLE:
DRAWN	JJLudemann		27 Jan 12			
CHK'D						
APPV'D						
MFG						
Q.A				MATERIAL:		DWG NO. JigRearKeel A4
				WEIGHT:		SCALE:1:1.5 SHEET 1 OF 2

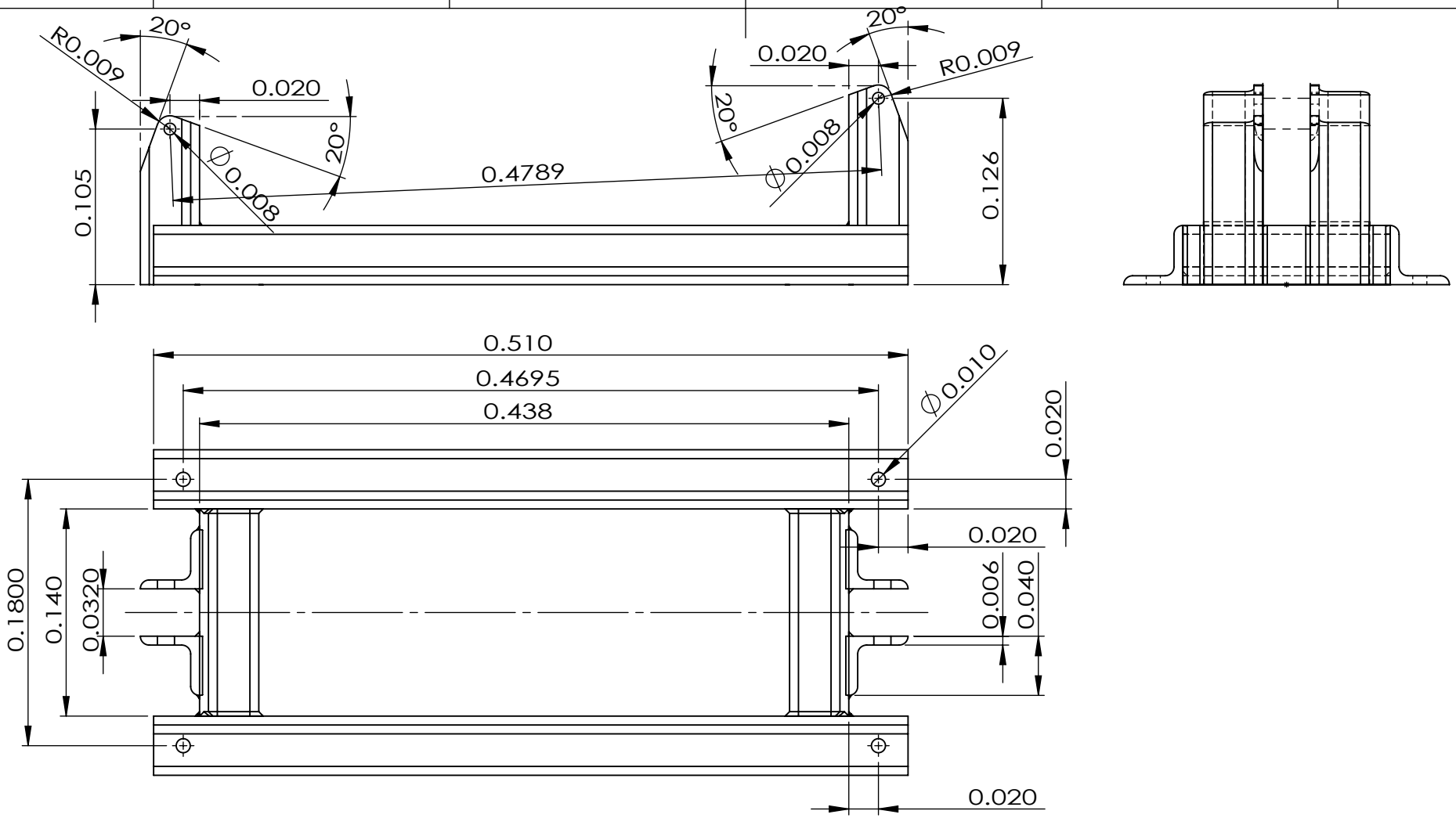

UNLESS OTHERWISE SPECIFIED: DIMENSIONS ARE IN MILLIMETERS SURFACE FINISH: TOLERANCES: LINEAR: ANGULAR:	FINISH: REVISION 0.1				DEBUR AND BREAK SHARP EDGES	Ludemann ENGINEERING
	NAME	SIGNATURE	DATE			TITLE:
DRAWN	JJLudemann		27 Jan 12			
CHK'D						
APPV'D						
MFG						
Q.A				MATERIAL:		DWG NO. JigRearKeel
						A4
				WEIGHT:		SCALE:1:4 SHEET 2 OF 2