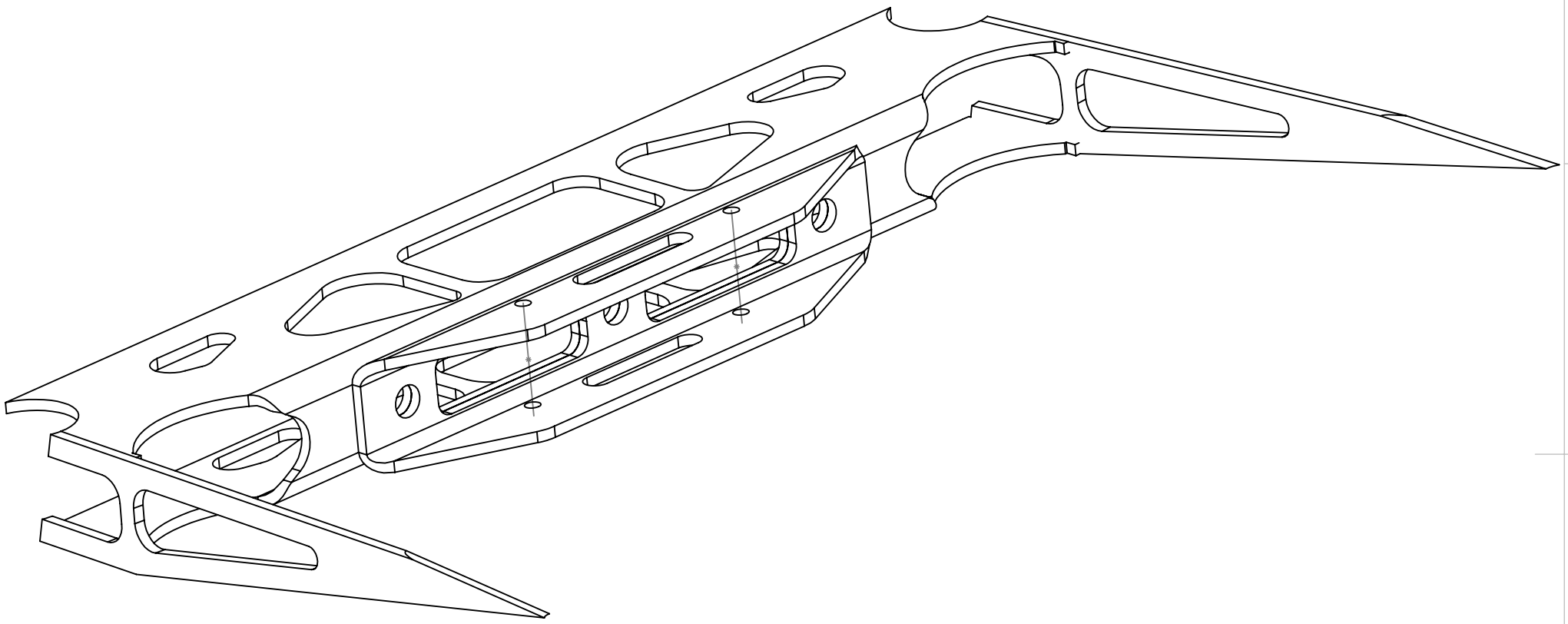

UNLESS OTHERWISE SPECIFIED: DIMENSIONS ARE IN MILLIMETERS SURFACE FINISH: TOLERANCES: LINEAR: ANGULAR:	FINISH: REVISION 1.0			DEBUR AND BREAK SHARP EDGES	Ludemann Engineering
	NAME	SIGNATURE	DATE		TITLE:
DRAWN	JJLudemann		20 Aug 2013		BracketShockMntF8
CHK'D					
APPV'D					
MFG					
Q.A				MATERIAL: Steel, SS400, 3.0mm Nom	DWG NO. 01-101-0009 A4
				WEIGHT:	SCALE:1:1.4 SHEET 1 OF 3

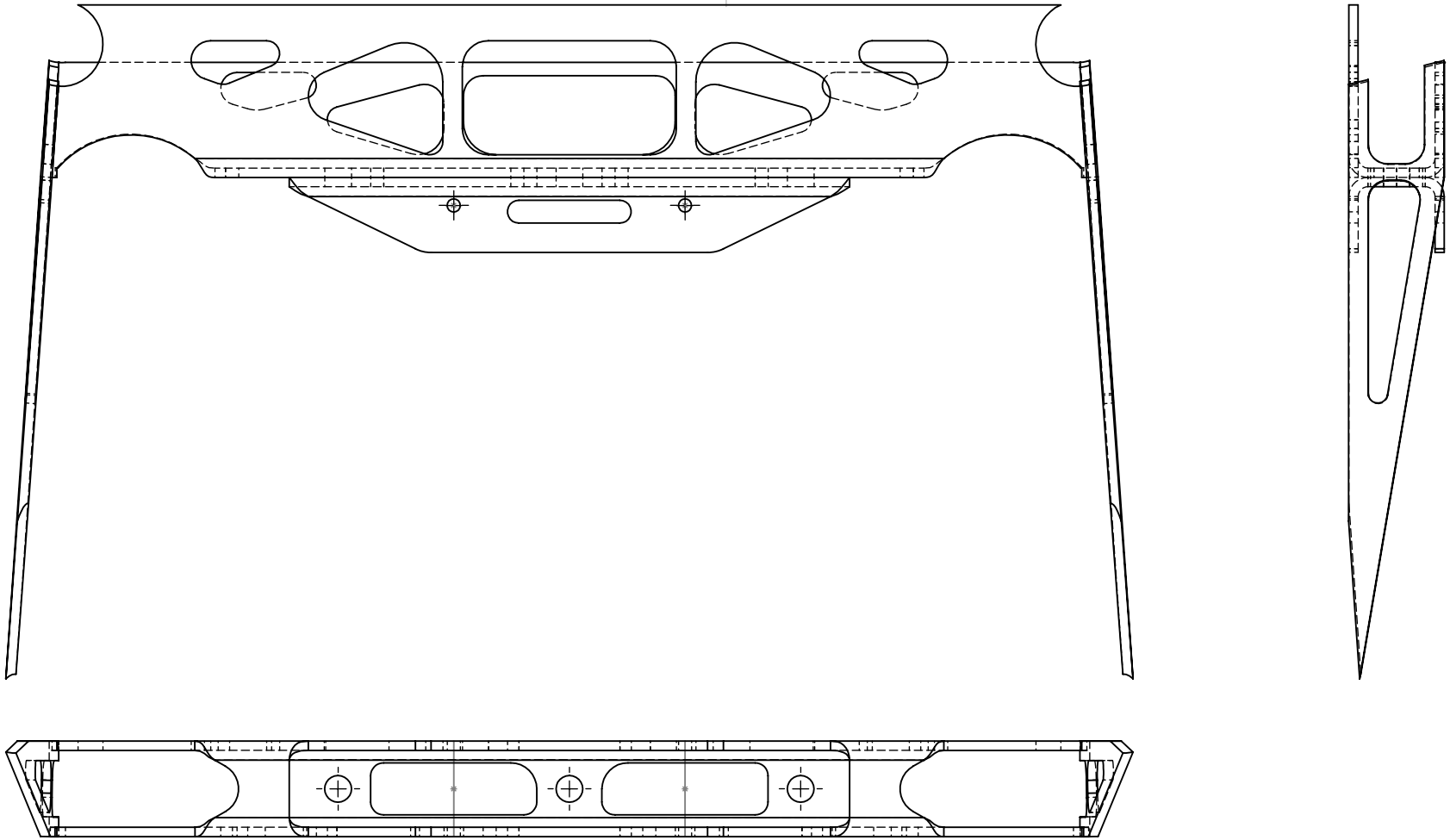

UNLESS OTHERWISE SPECIFIED: DIMENSIONS ARE IN MILLIMETERS SURFACE FINISH: TOLERANCES: LINEAR: ANGULAR:	FINISH: REVISION 1.0	DEBUR AND BREAK SHARP EDGES	Ludemann Engineering

	NAME	SIGNATURE	DATE
DRAWN	JJLudemann		20 Aug 2013
CHK'D			
APPV'D			
MFG			
Q.A			

MATERIAL: Steel, SS400, 3.0mm Nom

WEIGHT:

TITLE:

BracketShockMntF8

DWG NO. 01-101-0009

A4

SCALE:1:2

SHEET 2 OF 3

01-101-0009.1

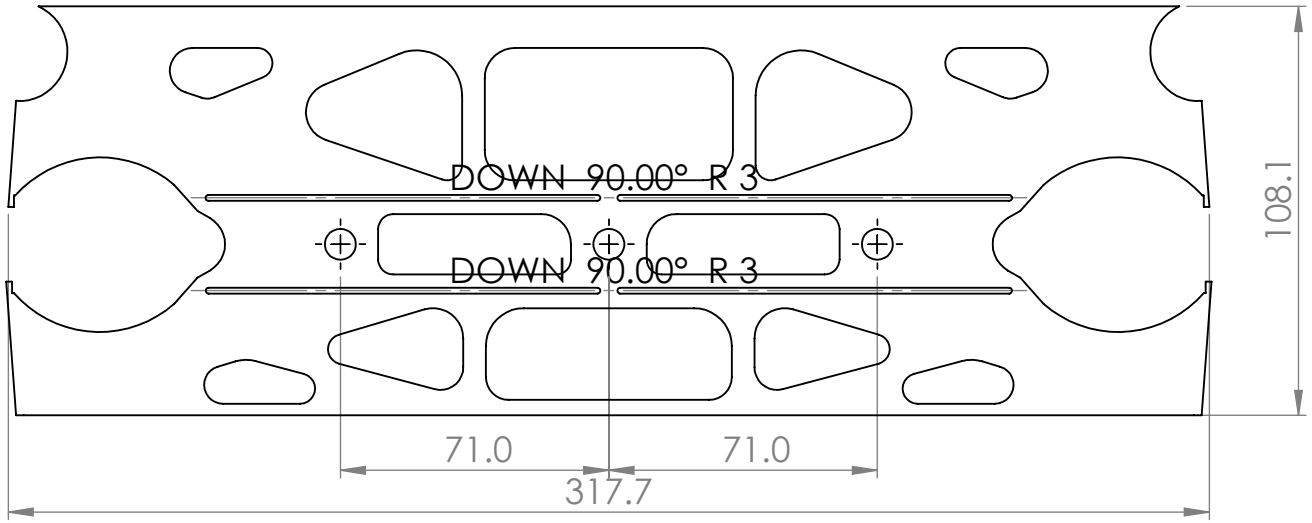

01-101-009.2

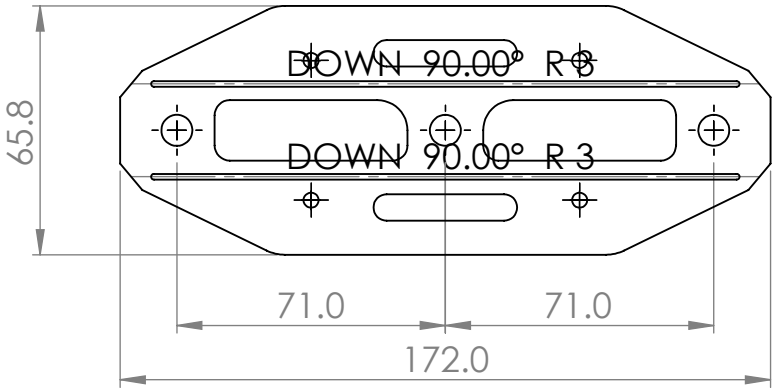

01-101-009.3 2X

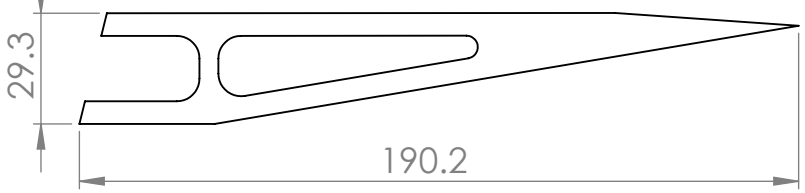

UNLESS OTHERWISE SPECIFIED: DIMENSIONS ARE IN MILLIMETERS SURFACE FINISH: TOLERANCES: LINEAR: ANGULAR:	FINISH: REVISION 1.0	DEBUR AND BREAK SHARP EDGES	

	NAME	SIGNATURE	DATE
DRAWN	JJLudemann		20 Aug 2013
CHK'D			
APPV'D			
MFG			
Q.A			

MATERIAL: Steel, SS400, 3mm Nom.

WEIGHT:

TITLE:

BracketShockMntF8

DWG NO. 01-101-0009

A4

SCALE:1:2

SHEET 3 OF 3