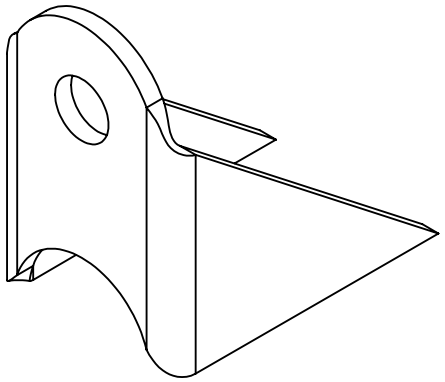

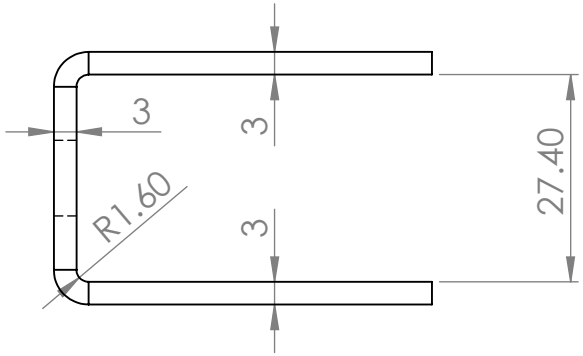

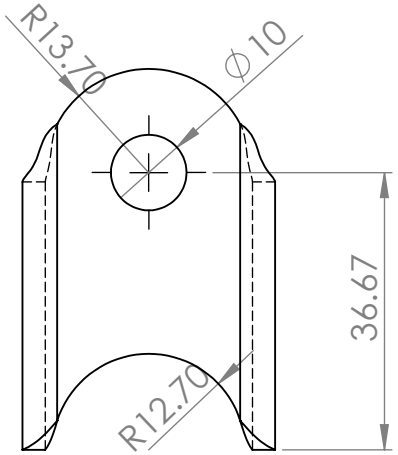

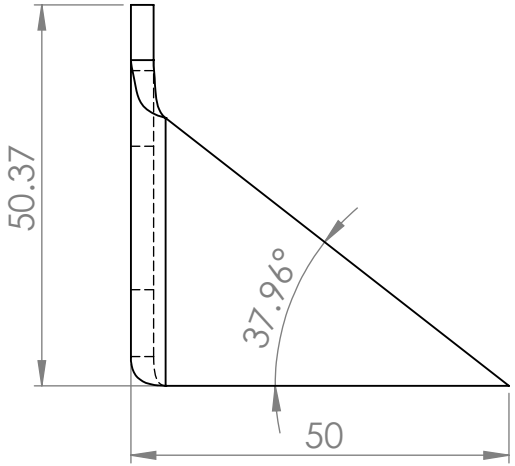

UNLESS OTHERWISE SPECIFIED: DIMENSIONS ARE IN MILLIMETERS SURFACE FINISH: TOLERANCES: LINEAR: ANGULAR:	FINISH: REVISION			DEBUR AND BREAK SHARP EDGES	Ludemann Engineering
	NAME	SIGNATURE	DATE		TITLE:
DRAWN	JJLudemann		24 Aug 2013		BracketEngineMountRU
CHK'D					
APPV'D					
MFG					
Q.A				MATERIAL: Steel, SS400 3.0mm Nom.	DWG NO. 01-501-0003 A4
				WEIGHT:	SCALE:1:1 SHEET 1 OF 2

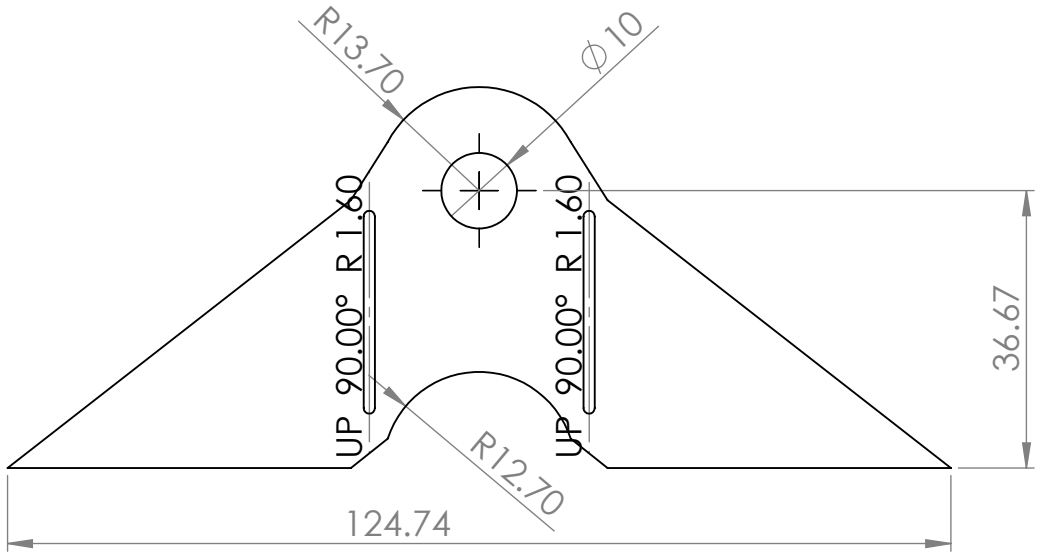

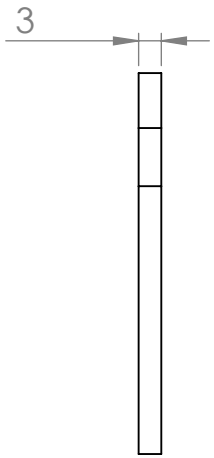

UNLESS OTHERWISE SPECIFIED: DIMENSIONS ARE IN MILLIMETERS SURFACE FINISH: TOLERANCES: LINEAR: ANGULAR:	FINISH: REVISION 1.0			DEBUR AND BREAK SHARP EDGES	Ludemann Engineering
	NAME	SIGNATURE	DATE		TITLE: BracketEngineMountRU
DRAWN	JJLudemann		24 Aug 2013		
CHK'D					
APPV'D					
MFG					
Q.A				MATERIAL: Steel, SS400 3.0mm Nom.	DWG NO. 01-501-0003 A4
				WEIGHT:	SCALE:1:1 SHEET 2 OF 2