Operating Manual

Cavro® Centris Pump

March 2012

30038165 Rev B

Operating Manual

Cavro® Centris Pump

Tecan Systems, Inc.
2450 Zanker Road
San Jose, CA 95131 USA
T 1 408 953 3100, Toll Free 1 800 231 0711
F 1 408 953 3101
E-mail: tecansystemsinfo@tecan.com
Web Site: www.tecansystems.com

March 2012
30038165 Rev B

Copyright © 2012 Tecan Systems, Inc.

Manual Number 30038165

Copyright and Trademark Information

Teflon® is a registered trademark of E.I. DuPont de Nemours & Co., Inc.
CONTRAD® is a registered trademark of Decon Laboratories, Inc.
Microsoft Windows® is a registered trademarks of Microsoft Corporation.
Cavro® is a registered trademark of Tecan Systems, Inc.

Product Warranty Information

Tecan Systems warrants that instruments manufactured and sold by Tecan Systems will be free from defects in materials and workmanship for a period of 24 months from the date of shipment to customer. Tecan Systems' liability for the breach of the foregoing warranty is limited to the repair or replacement of the products found to be other than warranted. Such products will be accepted for return only if the customer returns them to Tecan Systems' factory or repair depot within thirty (30) days from the time of discovery of the alleged defect, and prior to return, fills out a Certificate of Decontamination (document P/N 20730171), obtains a return authorization number from Tecan Systems, provides Tecan Systems with the serial number of each instrument to be returned, and prepays freight charges to the factory or a designated Tecan Systems repair depot. No warranty is expressed or implied for:

- Breakage
- Maltreatment
- Unauthorized service
- Units which are "life-cycled"
- Units not returned in original or adequate packaging
- Glass syringes
- Syringe seals
- Cavro plastic valves
- Cavro probes
- Tubing and tubing connections

The foregoing warranties and limitations are customer's exclusive remedies and are in lieu of all other warranties, express or implied, including without limitation any warranty of merchantability or fitness for a particular purpose.

Product Documentation Warranty Information

The information contained in this document is subject to change without notice. Tecan Systems makes no warranty of any kind with regard to this material, including, but not limited to, the implied warranties of merchantability and fitness for a particular purpose.

Tecan Systems shall not be liable for errors contained in this document or for incidental or consequential damages in connection with the furnishing, performance, or use of this material.

Table of Contents

1 Overview

1.1 About This Manual 1-1
1.2 Regulatory Considerations 1-2
1.3 Centris Pump Features at-a-Glance 1-3
1.4 Unpacking the Centris Pump 1-4
1.5 Functional Description of the Cavro® Centris Pump 1-4
1.6 Safety 1-9
1.7 Tips for Setting Up the Cavro® Centris Pump 1-10

2 Hardware Setup

2.1 Power and Electrical Considerations 2-1
2.2 Cabling 2-2
2.3 Communication Interfaces 2-4
2.4 Settings and Options 2-9
2.5 Installing Components 2-10
2.6 Mounting 2-11

3 Software Communication

3.1 Centris Addressing Scheme 3-1
3.2 Communication Protocols 3-3
3.3 Using the Centris Command Set 3-21
3.4 Initialization 3-25
3.5 Operating Commands 3-29
3.6 Error Codes and Pump Status 3-60

4 Setting Up the Centris Pump for Your Application

4.1 Glossary 4-1
4.2 Optimizing Centris Pump Performance 4-3
4.3 Chemical Compatibility 4-7
4.4 Helpful Hints 4-7

5 Maintenance

5.1 Daily Maintenance 5-1
5.2 Weekly Maintenance 5-1
5.3 Periodic Maintenance 5-3
5.4 On-Site Replacements 5-9

6 Technical Service

A Ordering Information
A.1 Centris Spare Parts A-1
A.2 Mating Connector Suppliers A-5

B Plunger Information
B.1 Plunger Time Calculations B-1

C ASCII Chart of Codes for U.S. Characters

D Centris Pump Specifications

E Command Quick Reference
E.1 Pump Configuration Commands E-1
E.2 Initialization Commands E-2
E.3 Valve Commands E-3
E.4 Plunger Movement Commands/Status Bit Reports E-4
E.5 Set Commands. E-4
E.6 Control Commands E-6
E.7 Non-Volatile Memory (EEPROM) Commands E-6
E.8 Report Commands E-7
E.9 Diagnostic Commands E-9

F Command Quick Reference

G Centris Ceramic Syringe Wash Option
G.1 Introduction. G-1
G.2 Using the Wash Option G-3
G.3 Replacing the Wash Option G-5
G.4 Maintaining the Wash Option G-9
G.5 Material Specifications G-10

List of Figures

Figure 1-1	Cavro® Centris Pump	1-3
Figure 1-2	Ceramic Syringe Components	1-5
Figure 1-3	Glass Syringe Components	1-5
Figure 1-4	3-Port Ceramic Valve Components	1-7
Figure 1-5	3-Port Plastic Valve Components	1-7
Figure 1-6	Centris Printed Circuit Assembly External Connectors	1-8
Figure 2-1	DA-15 Connector Pins	2-4
Figure 2-2	RS-232 Multi-Pump Cabling	2-6
Figure 2-3	RS-485 Multi-Pump Cabling	2-7
Figure 2-4	CAN Multi-Pump Cabling	2-8
Figure 2-5	Address Switch	2-9
Figure 2-6	Centris Threaded Mounting Holes	2-12
Figure 2-7	Centris Pump with Front Mounting Kit	2-13
Figure 2-8	Centris Pump with Side Mounting Kit	2-14
Figure 3-1	CAN Message Structure	3-12
Figure 3-2	3-Port Non-Distribution Valve	3-29
Figure 3-3	Valve Position Examples for 3-Port Non-Distribution Valves	3-30
Figure 3-4	3-Port Distribution Valve	3-31
Figure 3-5	Valve Position Examples for 3-Port Distribution Valves	3-31
Figure 3-6	4-Port Non-Distribution valve	3-32
Figure 3-7	Valve Position Examples for 4-Port Non-Distribution Valves	3-33
Figure 3-8	4-Port Dual-Loop Valve	3-33
Figure 3-9	Valve Position Examples for 4-Port Dual-Loop Valves	3-34
Figure 3-10	6-Port Distribution Valve (left) and 6-Port Distribution Valve with Chamfer (right)	3-34
Figure 3-11	Valve Position Examples for 6-Port Distribution Valves	3-35
Figure 3-12	9-Port Distribution Valve	3-35
Figure 3-13	Valve Position Examples for 9-Port Distribution Valves	3-36
Figure 3-14	12-Port Distribution Valve (with Z initialization)	3-36
Figure 3-15	12-Port Distribution Valve	3-37
Figure 4-1	Syringe Speed	4-2
Figure 5-1	Ceramic Syringe Replacement	5-6
Figure 5-2	Inserting the ball end of the glass syringe	5-7
Figure 5-3	Screwing the glass syringe into the valve	5-8
Figure 5-4	Fully tightened syringe thumbscrew	5-8
Figure 5-5	Centris Pump Printed Circuit Assembly	5-10
Figure G-1	Centris Pump with Wash Option	G-1
Figure G-2	Centris Wash Option	G-2
Figure G-3	Three Centris pumps with Wash Options, configured with an external pump	G-3
Figure G-4	Wash Option(s) configured to the Centris Pump	G-4

Figure G-5 Loosening Fasteners. G-6
Figure G-6 M2 Screws G-7
Figure G-7 Alignment of the Wash Option G-7
Figure G-8 Vertical Aligning the Centris Pump G-8

1 Overview

The Centris pump is a compact OEM pump module designed to handle precision liquid handling applications in the <250 nL to 12.5 mL range. It is controlled by an external computer or microprocessor and automates pipetting, diluting, and dispensing functions.

This chapter introduces the Cavro® Centris Pump and provides an overview of its functionality. Reading this chapter provides the context that is required to make the technical information in later chapters meaningful.

1.1 About This Manual

1.1.1 Introduction

This manual describes the installation and maintenance of the Cavro® Centris Pump. It includes instructions for the physical and electrical installation of the module, and how to integrate the operation of the Centris and its accessories into a software application.

1.1.2 Audience

This manual is for original equipment manufacturer (OEM) engineers and OEM users who need to incorporate the Centris into their hardware and/or software product. It provides information for OEM user installation and testing, and information that the OEM must pass along to their users.

This manual assumes that the reader is technically proficient in electrical, mechanical, or software engineering, depending on the tasks to be performed. Drawings and specifications necessary to integrate the Centris into your project are provided in this manual.

1.1.3 Manual Organization

This reference contains the following chapters:

- Chapter 1, “Overview”
- Chapter 2, “Hardware Setup”
- Chapter 3, “Software Communication”
- Chapter 4, “Setting Up the Centris Pump for Your Application”
- Chapter 5, “Maintenance”
- Chapter 6, “Technical Service”

This manual also contains the following appendixes, which include reference information about the Cavro® Centris Pump:

- Appendix A, “Ordering Information”
- Appendix B, “Plunger Information”
- Appendix C, “ASCII Chart of Codes for U.S. Characters”
- Appendix D, “Centris Pump Specifications”
- Appendix E, “Command Quick Reference”
- Appendix F, “Command Quick Reference”
- Appendix G, “Centris Ceramic Syringe Wash Option”

1.2 Regulatory Considerations

The Centris pump is a general laboratory module. Since it is not a medical device, it is not subject to FDA regulatory approval. The Centris pump uses only UL recognized components (standard UL61010A-1) and bears the UL Recognized Component Mark:

The use of UL Recognized components in a product or system allows UL to focus the evaluation of the complete system on its intended end-use, and thus speeds up the evaluation of that product or system. For more information regarding UL certification of Tecan Systems’ syringe pumps, please visit the Underwriters Laboratories Inc. website at http://www.ul.com/info/standard.htm. Tecan Systems’ customer file number for the recognized component is E164638.

1.2.1 CE

As a module designed for incorporation into larger systems that require independent testing and certification, the Centris pump does not carry its own CE mark.

1.2.2 Radio Interference

The Centris pump can radiate radio frequency energy, which may cause interference to radio and television communications. Follow standard good engineering practices relating to radio frequency interference when integrating the Centris pump into electronic laboratory systems.

1.2.3 RoHS

Tecan Systems' Centris pump is RoHS compliant. RoHS compliant modules are built with components that meet the requirements set by the European Union's Directive 2002/95/EC on the Restriction of Hazardous Substances ("RoHS" Directive).

1.3 Centris Pump Features at-a-Glance

Figure 1-1 *Cavro® Centris Pump*

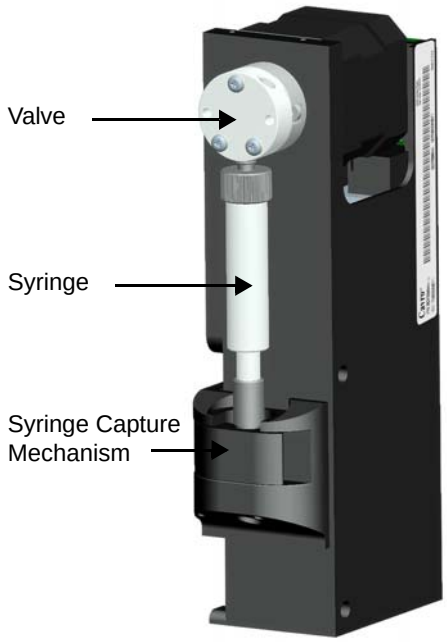

The Centris pump is a compact syringe pump that is designed for OEM precision liquid handling applications. It has the following standard features and functions:

- Small footprint
- Aspirate/dispense resolution of 181,490 increments
- Syringe drive optimized for minimum running noise and uniform flow rates
- Accuracy < 0.25% at full stroke (ceramic syringes)
- Precision ≤ 0.05% CV at full stroke (ceramic syringes)
- Ceramic and glass syringe options from 50µl to 12.5 mL
- Ceramic and plastic valve options from 3 to 12 ports.
- RS-232, RS-485 and CAN interface
- Smart fast initialization
- Programmable flow rates (5 mL/s to less than 5 nL/s)

- Advanced on-board pump diagnostics, self-test, and error reporting
- Auxiliary inputs and outputs
- Optional mounting kit available for easier integration
- Wash option available for applications using ceramic syringes with saline buffers.

Note: *For complete specifications, see Appendix D, "Centris Pump Specifications".*

Note: *For more information on the Wash Option, see Appendix G, "Centris Ceramic Syringe Wash Option".*

1.4 Unpacking the Centris Pump

To unpack the module, follow these steps:

1 Remove the pump module(s) and accessories from the shipping cartons.

2 Check the contents against the packing slip to make sure that all the components are present.

3 If an optional mounting kit was purchased with the Centris pump, assemble the mounting kit in the desired orientation with the pump before use.

1.4.1 ESD Considerations

The Centris pump is an electronic device that is sensitive to electrostatic discharge (ESD). Static discharge from clothing or other fixtures can damage these components. To prevent premature failure of pump components, the Centris pump should be handled using good ESD practices. These include, but are not limited to:

- Using wrist or ankle straps
- ESD mats or worktables
- ESD wax on the floor

Prepare an ESD-free work area before the chassis is grounded.

1.5 Functional Description of the Cavro® Centris Pump

The Centris pump uses a stepper-motor driven syringe and valve design to aspirate and dispense measured quantities of liquid. Functional descriptions and illustrations of each major Centris component are provided in the following sections.

1.5.1 Syringe and Syringe Drive

The syringe plunger is moved within the syringe barrel by a lead screw drive that incorporates a stepper motor and linear encoder to detect lost steps. The syringe drive has a 30 mm travel length and resolution of 181,490 increments. When power is not applied to the pump, the syringe drive can be moved by turning the lead screw from below using a 2.5mm hex driver.

With ceramic syringes, an effective dynamic seal for pumping liquids is achieved by the precise surface finish and tolerances of the long-life ceramic syringe materials. The syringe is secured to the drive mechanism (carriage) by a magnetic coupling. This self-aligning, maintenance-free mechanism is designed to maximize performance and component life.

Figure 1-2 *Ceramic Syringe Components*

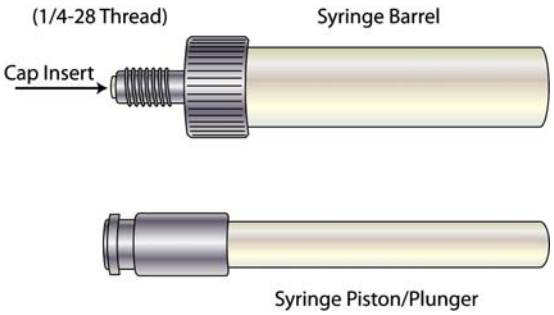

Figure 1-3 *Glass Syringe Components*

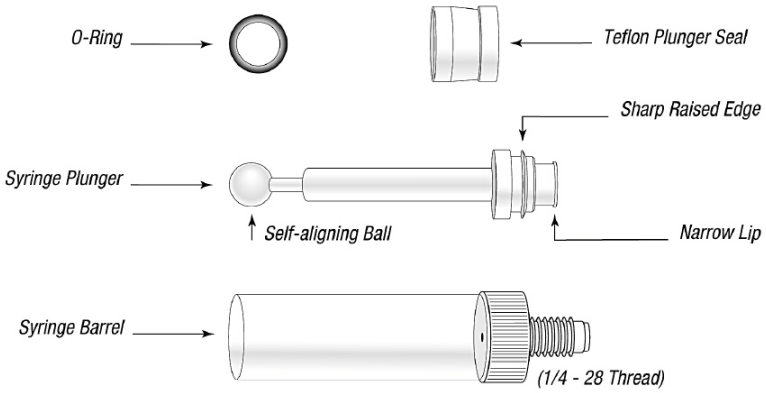

Syringes are available in multiple sizes. For ordering information, see Appendix A, “Ordering Information”.

Caution! *Since the principle of operation for the paired ceramic components is a dynamic liquid seal based on the surface forces of the liquids in the pump, ceramic syringes are limited for applications with backpressure or very slow dispenses against a low backpressure. These applications will cause leakage between the syringe barrel and piston. The leakage rate is proportional to the syringe size, system backpressure, and fluid viscosity. Customers with applications producing sustained backpressure should use glass syringes, which are rated to 60 psi.*

Note: *Ceramic syringes are made from precision-paired components. Do not touch or handle the ceramic material on the syringe plunger. Oils and contamination from handling can prevent correct operation of the Centris pump.*

Caution! *The ceramic materials used in the syringe pump are eight times harder than stainless steel and will last the life of the product if used correctly. Please exercise caution when handling the ceramic syringe to ensure that the plunger is not removed from the barrel. This can result in damage to the ceramic components.*

Caution! *Keep fingers away from the plunger carriage while the pump is running. Failure to do so can cause injury.*

1.5.2 Valve and Valve Drive

Ceramic valves are made of a long-life ceramic body and rotor assembly. The rotor rotates against the valve body to connect the syringe port to the available input and output ports. For plastic valves, a plug is rotated within a plastic valve body to select the fluid path. Some valve options also have a bypass position. This position “bypasses” the syringe and connects the input and output ports. The bypass position is often used for flushing fluid lines. The valve is turned by a stepper motor that has an encoder coupled to it for positioning feedback and step loss detection. The valves can withstand 60psi of backpressure from other modules in use on the fluid path.

The ceramic valves contain hardware for mounting the valves to the pump frame as well as threaded ports for attachment of the syringe and the appropriate number of ¼ -28 fittings for tubing. Connections can be made with flanged or flangeless fittings.

Since the sealing surface of the ceramic material is very hard and durable, a more compliant plastic fitting and sealing surface will attain an easier robust seal than a hard fitting. Metal fittings should never be used.

Figure 1-4 *3-Port Ceramic Valve Components*

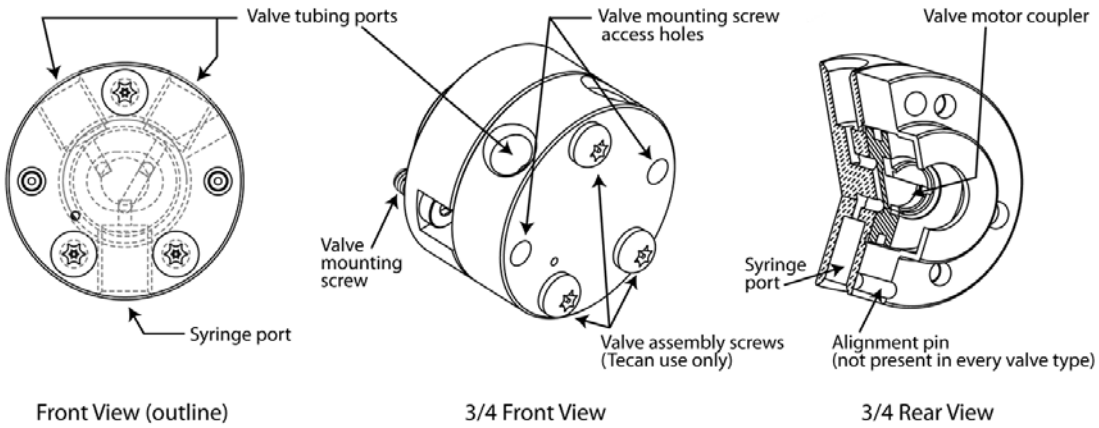

Figure 1-5 *3-Port Plastic Valve Components*

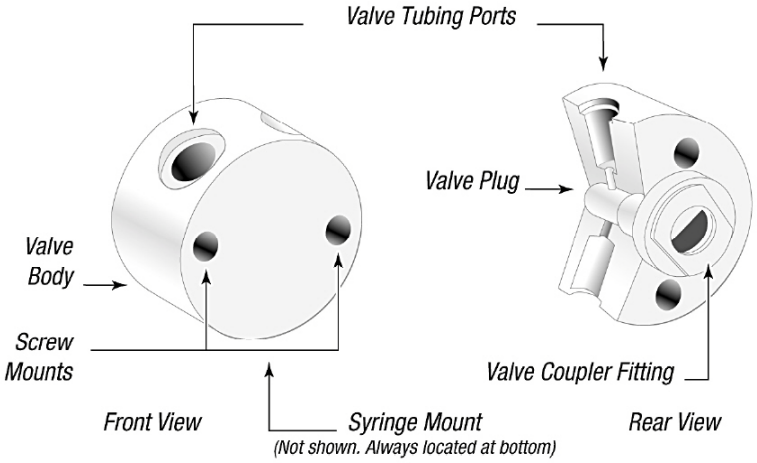

Caution! *Valve pressure ratings refer to pressure that can be withstood by the valve while not rotating. Valves are not designed to withstand constant backpressure near the upper limit of their pressure ratings or during rotation. Using valves in this fashion will result in shortened valve life.*

1.5.3 Printed Circuit Assembly

The printed circuit assembly (PCA) holds the microprocessor and circuitry to control the syringe and valve drives. The PCA provides connectors for electrical

inputs and outputs as well as a communication address switch. For information on modes of operation, see Chapter 3, “Software Communication”.

Figure 1-6 shows the accessible components on the printed circuit board assembly.

Figure 1-6 *Centris Printed Circuit Assembly External Connectors*

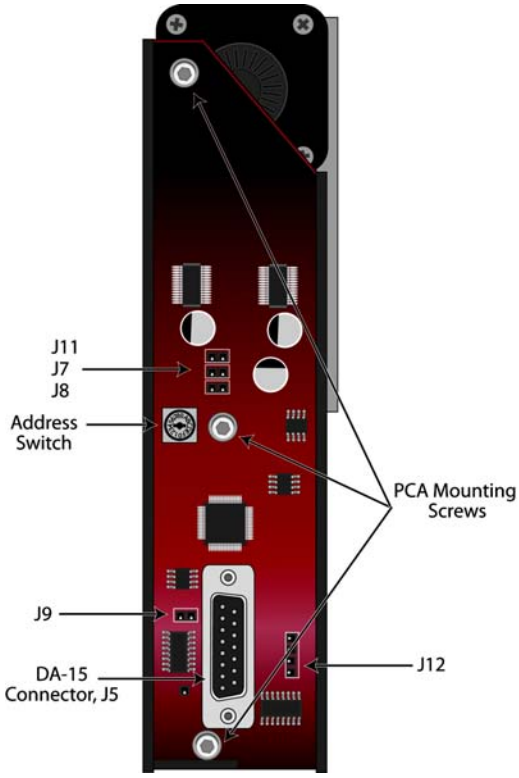

The Centris PCA has a DA-15 connector to handle power and communications. For more information on the printed circuit assembly inputs/outputs and the address switch, see Chapter 2, “Hardware Setup.”

Caution! *When handling the PCA, use care to prevent ESD. Small amounts of static discharge can damage the PCA.*

1.5.4 Communication Interfaces

Depending on the pump configuration, the Centris pump can communicate singly or in a multi-pump configuration through an RS-232, RS-485, or CAN (Controller Area Network) interface. For RS-232 and RS-485, baud rates of 9600 and 38400 are supported. For CAN, baud rates of 100K,125K, 250K, 500K, and 1M are supported.

For details on the communications interfaces, see Chapter 2, “Hardware Setup”.

1.5.5 Multi-Pump Configurations

Up to sixteen (16) Centris pumps can be connected together in a *multi-pump configuration* (also called “daisy-chaining”). In this configuration each pump is addressed separately from a single terminal via its unique address, which is set using the address switch on the back panel of the pump.

Within a multi-pump configuration, the RS-485 communications bus is required, although the first pump in the chain may receive either RS-232 or RS-485 communications. For CAN communications, neither RS-232 nor RS-485 is required. For more information on setting addresses, see Chapter 2.

1.6 Safety

The Cavro® Centris Pump is designed for pipetting and dispensing operation in the <250 nL to 12.5 mL range. Any other use is considered improper and may result in damage to the pump and/or unreliable test results.

The Centris pump is designed to meet recognized technical regulations and is built with state-of-the-art components. Nevertheless, risks to users, property, and the environment can arise when the module is used carelessly or improperly. Appropriate warnings in this Operating Manual serve to make the user aware of possible hazards.

1.6.1 Notices and Symbols

Warning Notices Used in this Manual

The triangle warning symbol indicates the possibility of personal injury if the instructions are not followed.

Specific symbols indicate the hazard to which a user is exposed. A few examples follow.

Toxic Substance

Chemical or biological hazards can be associated with the substances used or the samples processed with the Centris pump. Always be aware of possible hazards associated with these substances.

Explosion and Fire Hazard

Never process explosive or highly flammable liquids with the Centris pump.

Pinch Point, Mechanical Hazards

Automatically moving parts may cause injuries (crushing, piercing)

Attention

The general “Read This” symbol indicates the possibility of equipment damage, malfunction or incorrect process results, if instructions are not followed.

1.7 Tips for Setting Up the Cavro® Centris Pump

For complete information on setting up the Centris pump, see Chapter 2, “Hardware Setup”, Chapter 3, “Software Communication”, and Chapter 4, “Setting Up the Centris Pump for Your Application”.

Note: *Before performing any work with the pump, first read this Operating Manual carefully.*

To ensure proper operation, follow these tips:

- Always set up and mount the pump in an upright position. Failure to do so can cause problems priming the system.
- Always run liquid through the syringe and valve when they are moving. Failure to do so can damage the precision sealing surfaces and reduce product life.
- Always power down the instrument when connecting or disconnecting pumps.

Caution! *Before running any organic solvents through the pump, refer to a chemical compatibility chart to verify suitability of wetted materials for your application.*

2 Hardware Setup

This chapter includes these sections describing the various parts of hardware setup:

- Power and Electrical Considerations
- Cabling
- Communications Interfaces
- Settings and Options
- Installing Components
- Mounting

2.1 Power and Electrical Considerations

The Centris pump requires a 24VDC power supply provided through a DA-15 connector. Tecan Systems recommends using one power cable for every two pumps to provide noise immunity, i.e., power should not be daisy-chained to more than two pumps.

The input voltage rating at the DA-15 connector is 24 VDC ± 10%. The input current rating is 1.5 A peak current typical, 2.5 A max. The average current is 1.0 A typical.

2.1.1 Choosing a Power Supply

The 24V DC supply for a single Centris pump should meet the following basic requirements:

- Output voltage: 24V nominal ±10%, including voltage loss caused by wiring
- Well-regulated power supplies are recommended
- Conformance to required safety and EMI/RFI specifications

2.1.2 Integrating a Power Supply

When a power supply is used to operate more than one Centris pump or other device, it must provide the total peak current for all devices. The power supply and filter capacitance together must satisfy the total peak input current for all devices.

If the pumps are not operating simultaneously, then a reduced power supply rating may apply. The minimum power supply rating must be confirmed by measurement.

External equipment with inadequate bypass capacitance or that is inadequately sourced for current can cause overvoltage transients and sags, and can create unnecessary ripple current in the Centris pump. This can result in decreased

component life. Additionally, it is possible for a regulated power supply to become unstable with certain loads and oscillate if adequate filter capacitance is not present. Some forms of oscillation can cause failures in the Centris pump. These issues can be avoided by using a properly designed commercial power supply.

Consideration should also be given to the wiring of the Centris pump and any additional devices. Wiring should be of sufficient gauge for the current, and as short as possible. Unless otherwise required by safety requirements, the power supply lines to the pump should be 20AWG or heavier. Multiple Centris pumps can be daisy-chained, provided that the wire size and the power supply are adequate for the total current and voltage loss. It is best if each pair is twisted or dressed together from the device to the supply. For more information on multi-pump cabling, see Section 2.2, Cabling.

To control power to the Centris pump, switch power to the power supply. Do not use a relay or switch contacts between the 24V supply and the Centris pump (i.e., do not switch DC input to the pump).

2.1.3 Switching Power Supplies

Be sure to carefully check the minimum load requirement of the power supply. Typically, switching supplies have a minimum load requirement of up to 10% of the rated output current.

Note: *The Centris pump idle current is less than 10% of the full running current.*

For example, in a system with multiple Centris pumps, a 24V 5-amp switcher with a minimum load less that 500mA may not provide sufficient current when the Centris motors are idle and all other devices are in a low current state. If the Centris pump is the only load on the 24V supply, a switcher should have a minimum load specification of 50mA or less. An appropriate external power resistor can be used to ensure that the minimum load is met.

2.2 Cabling

A single cable supplies both power and communications to each Centris pump. A unique address identifies each pump module. For more information, see “Address Switch Settings” later in this chapter. See also Chapter 3, “Software Communication”.

Power requirements are described in Section 2.1, Power and Electrical Considerations.

Table 2-1 *DA-15 Connector Pin Assignments*

Pin	Function	Remarks
1	24V DC	
2	RS-232 TXD line	Output data
3	RS-232 RXD line	Input data
4	Reserved	
5	CAN high signal line	
6	CAN low signal line	
7	Auxiliary input #1	TTL level
8	Auxiliary input #2	TTL level
9	Ground	Power and logic
10	Ground	Power and logic
11	RS-485 A line	Data +
12	RS-485 B line	Data -
13	Auxiliary output #1	TTL level
14	Auxiliary output #2	TTL level
15	Auxiliary output #3	TTL level

Figure 2-1 shows the pin positions of the DA-15 connector on the printed circuit assembly. This is a male connector that requires a female connector on the mating cable.

Figure 2-1 *DA-15 Connector Pins*

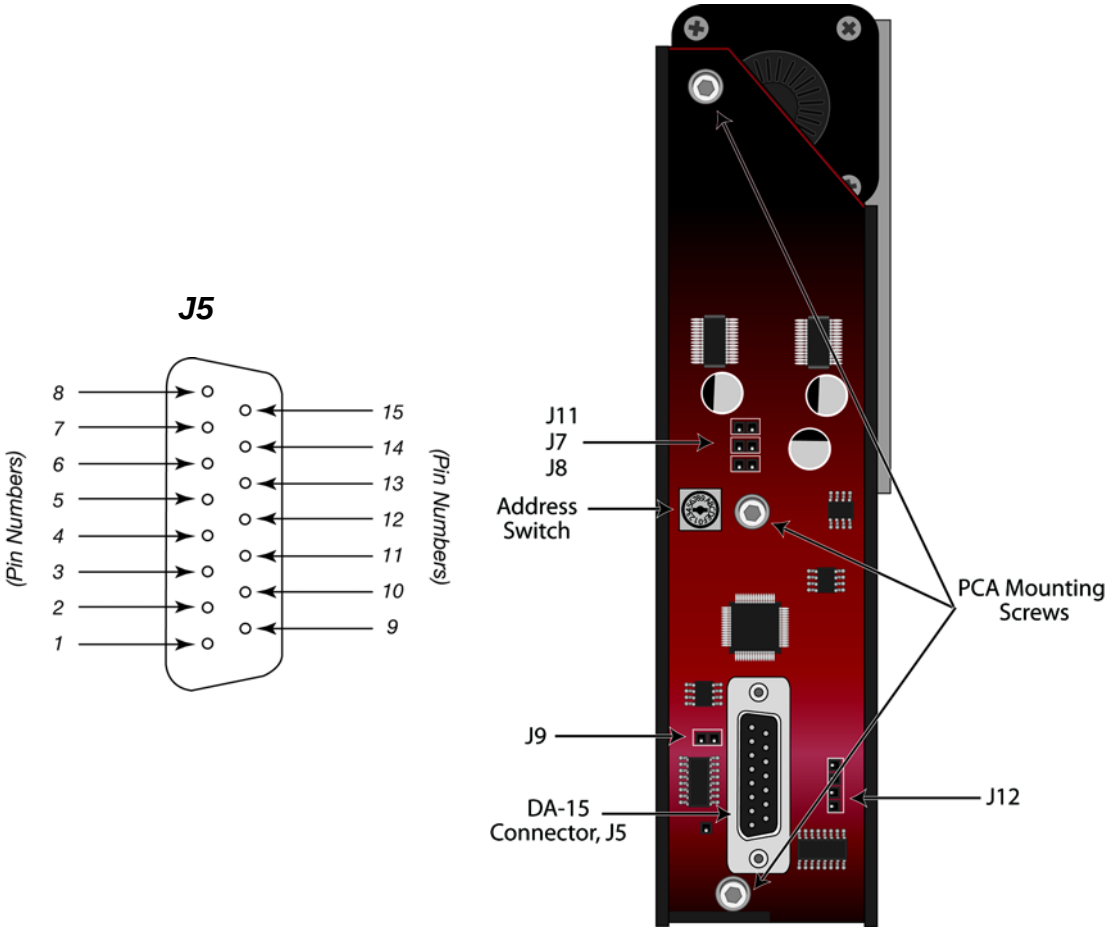

2.3 Communication Interfaces

The computer or controller communicates with the Centris pump through an RS-232 interface, RS-485 interface, or CAN (Controller Area Network) interface. Examples of cabling connections are shown in Figure 2-2, Figure 2-3, and Figure 2-4 on the following pages.

2.3.1 RS-232/RS-485 Interface

The RS-232 interface automatically converts the protocol to RS-485 for the benefit of any other devices which may be connected to the Centris pump's RS-485 communication bus (this constitutes the so-called "multi-drop" device configuration).

Note: *The RS-232 interface does not support hardware handshaking and requires only three lines: RXD, TXD, and Signal Ground.*

When using a multi-drop arrangement, up to 16 pumps can be addressed by the controller on the same communications bus. Refer to the cabling illustrations on the following pages. These illustrations show the multi-pump cabling for RS-232, RS-485, and CAN connections, respectively. Also shown is the external termination scheme for each communication protocol.

2.3.2 CAN Interface

The CAN interface is a two-wire serial system. The bus is driven differentially in a manner similar to RS-485. The major difference is in the protocol. The CAN protocol is designed to allow any device on the bus to send a message at any time. This is unlike other two-wire interfaces in which the slave devices can only transmit in response to a query. Using the CAN interface, the pump can send a message to inform the master that it has completed its task. Anti-collision detection (which reconciles problems that occur when two devices talk at once) is carried out by the CAN controller hardware. Refer to the cabling illustrations on the following pages.

Caution! *Always power off pumps before connecting to or disconnecting from the bus.*

RS-232 Cabling

Figure 2-2 *RS-232 Multi-Pump Cabling*

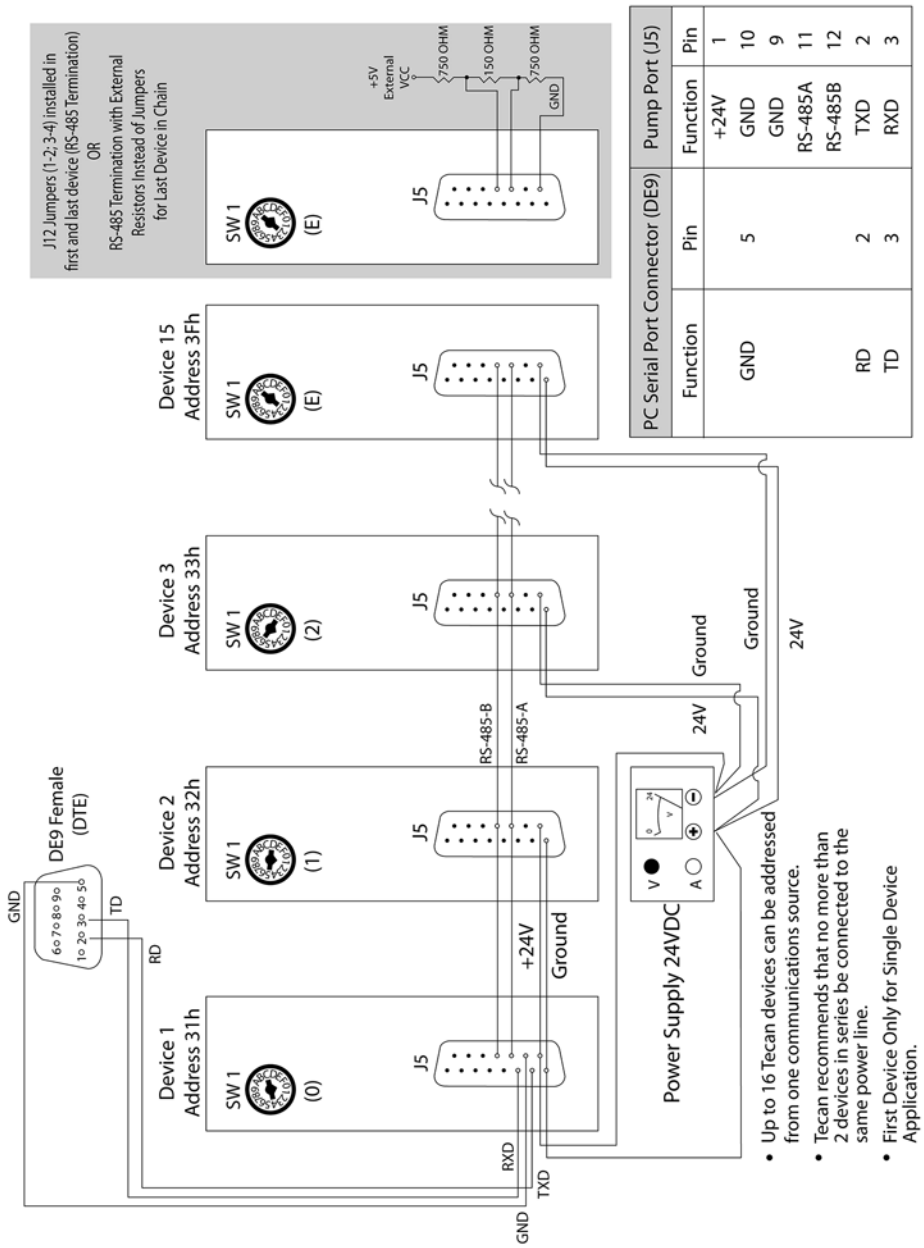

PC Serial Port Connector (DE9)		Pump Port (J5)	
Function	Pin	Function	Pin
GND	5	+24V	1
		GND	10
		GND	9
		RS-485A	11
		RS-485B	12
RD	2	TXD	2
TD	3	RXD	3

RS-485 Cabling

Figure 2-3 *RS-485 Multi-Pump Cabling*

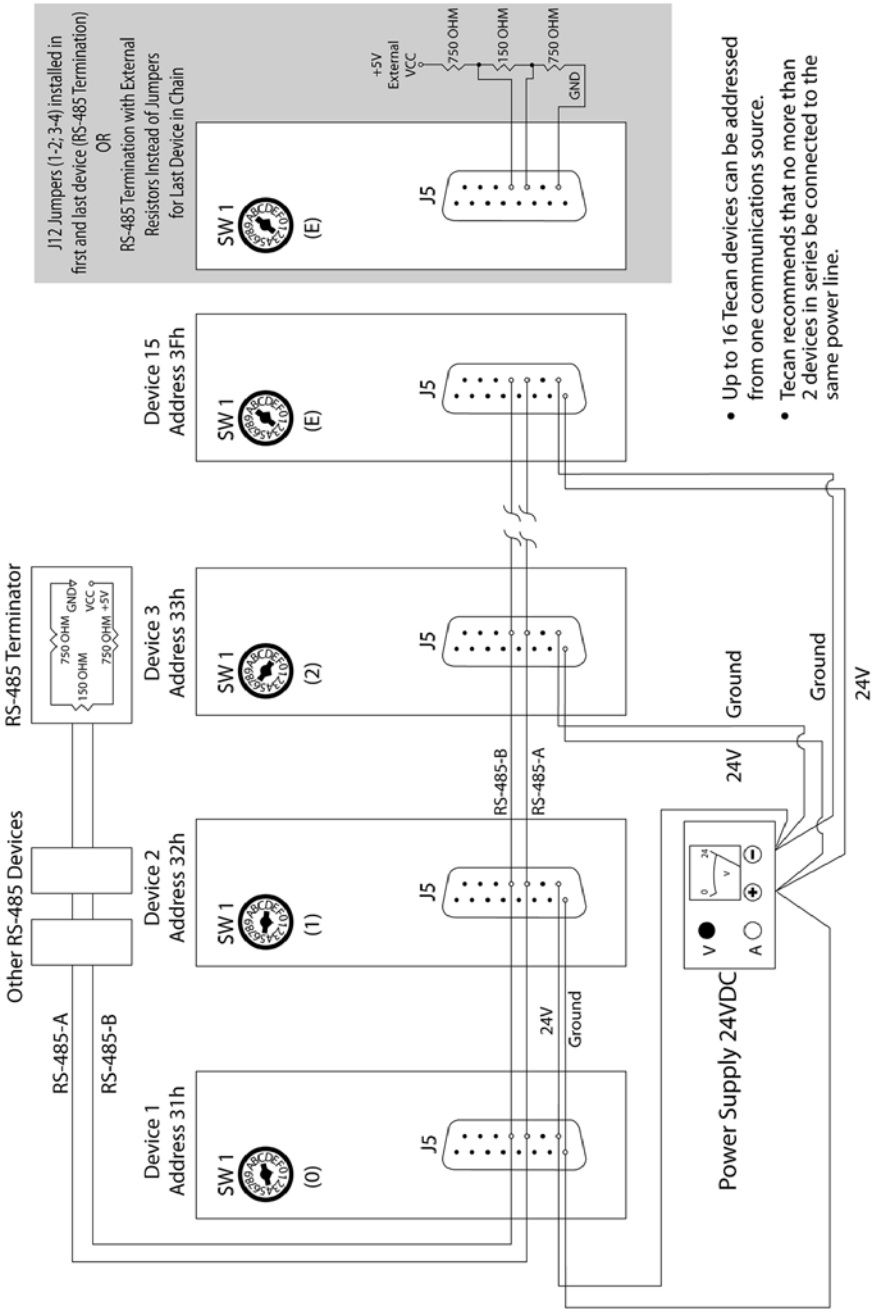

CAN Cabling

Figure 2-4 *CAN Multi-Pump Cabling*

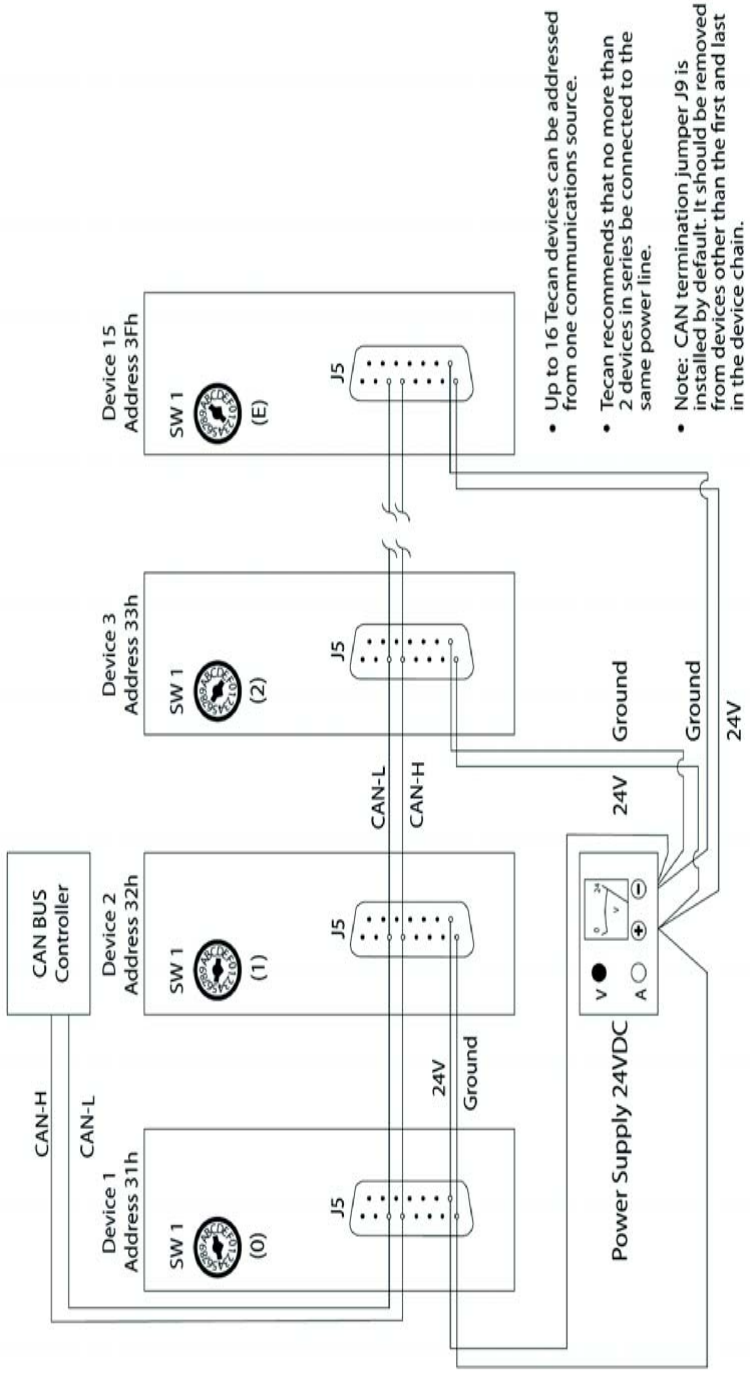

2.4 Settings and Options

2.4.1 Configuration Commands

The Centris firmware allows the user to configure the pump for different modes of operation. The U commands (see Chapter 3 of this manual) are used to write the configuration information to the non-volatile memory and control the following options:

- **Valve type:** The pump can be configured to operate with different valve options.
- **Baud rate:** RS-232/RS-485 communication is possible at 9600 baud (default) and 38400 baud. CAN communication is possible at 100K baud (default), 125K baud, 250K baud, 500K baud, and 1M baud rates.
- **Non-volatile memory auto mode:** Allows the pump to run command strings out of the non-volatile memory without a host PC or controller.
- **Self-test enable/disable**.
- **Syringe volume:** This is required to enable volume-based aspirate and dispense commands.

2.4.2 Address Switch Settings

The address switch (see Figure 2-5, “Address Switch”) is located on the Centris PCA. It is used to give each pump in a multi-pump configuration a unique or specific address, allowing the user to direct commands to specific pumps. The address switch has sixteen positions (numbered 0 through F). Fifteen positions (addresses 0 through E) are valid pump addresses by default. If self-test mode is disabled, there are sixteen valid pump addresses (see Section 3.3.2, Pump Configuration Commands).

Figure 2-5 *Address Switch*

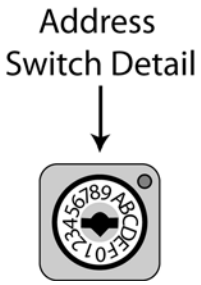

To set the address switch:

To set the address switch, use a small flat-head screwdriver and turn the switch in either direction to the desired position.

Note: *Power cycle (or power up) the pump after setting the address switch.*

For information on the addressing schemes for different pump configurations, see Chapter 3, “Software Communication”.

2.4.3 Self-Test

The “F” address switch position is used to activate the Centris self-test. This mode is used for run-in and troubleshooting purposes. The self-test causes the Centris pump to initialize, then cycle repeatedly through a series of full stroke plunger and valve movements. The self-test cycles through speed codes S5, S7, S9, and S11 and pumps fluid through the pump from the input port to the output port of the valve. These speeds may not be appropriate for every application based on syringe size, tubing, or other flow restrictions. This mode should not be used in cases where the pump is installed in a highly restricted flow path because it could trigger false pump errors. If an error condition occurs, the pump stops moving.

To run the self-test, set the address switch to position “F.” Then supply power to the pump.

Issuing a [T] command while in self-test mode terminates the self-test. The pump remains in normal mode until the next on/off cycle.

Caution! *Always run liquid through the syringe and valve. Failure to do so can damage the valve and syringe.*

2.4.4 Inputs/Outputs

The Centris pump provides two auxiliary inputs and three auxiliary outputs that can be accessed through the DA-15 connector. They provide TTL level signals. The outputs are controlled by the [J] command.

The auxiliary inputs are located on J5 pins 7 and 8. They are clamped to 5VDC and have an internal series resistor of 750 Ω.. The inputs can be read back using report commands ?13 and ?14. Additionally, the inputs can be used to externally trigger a command sequence using the [H] command. The commands are described in Chapter 3, “Software Communication.”

The auxiliary outputs are located on J5 pins 13, 14, and 15. They are clamped to 5VDC and have a series resistance of 120 Ω.

2.5 Installing Components

See Section 5.3, Periodic Maintenance, for instructions on installing the Centris valve and syringe, if needed.

2.6 Mounting

By default, the Centris pump is mounted at the top and/or bottom. Five tapped M3 mounting holes provide top and bottom mounting options. See Figure 2-6, “Centris Threaded Mounting Holes” for the locations of the threaded mounting holes.

Centris pumps may be mounted side by side without any space between pumps for some configurations. The larger valves require spacing between pumps to allow relief for tubing and fittings.

Note: *Always mount the pump in an upright position. Failure to do so can cause problems in priming the system.*

Figure 2-6 *Centris Threaded Mounting Holes*

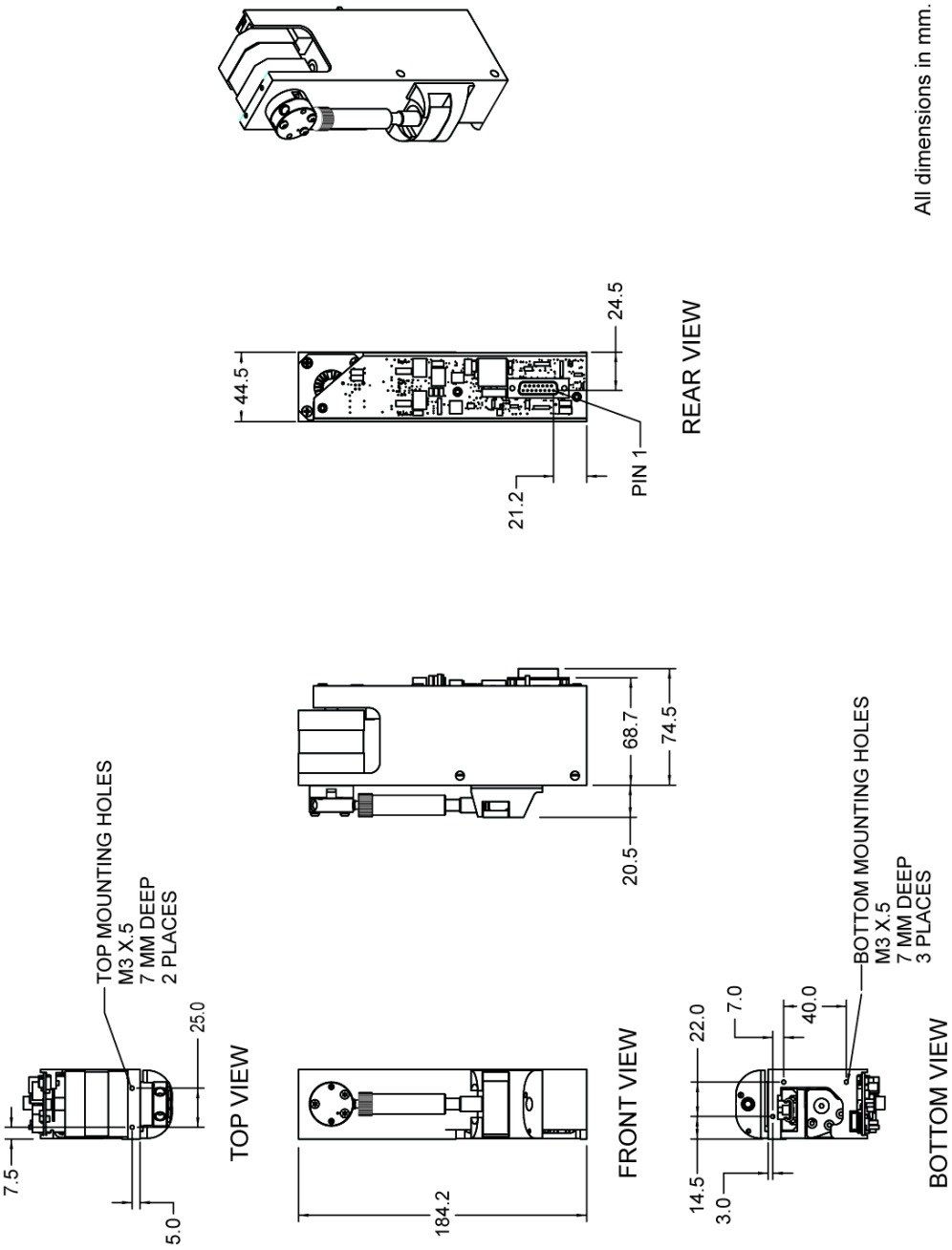

A mounting kit is available to provide additional integration flexibility. The mounting kit is reversible and provides threaded holes for front or side mounting. See Figure 2-7 and Figure 2-8 for locations of the threaded mounting holes with mounting kit configurations.

Figure 2-7 *Centris Pump with Front Mounting Kit*

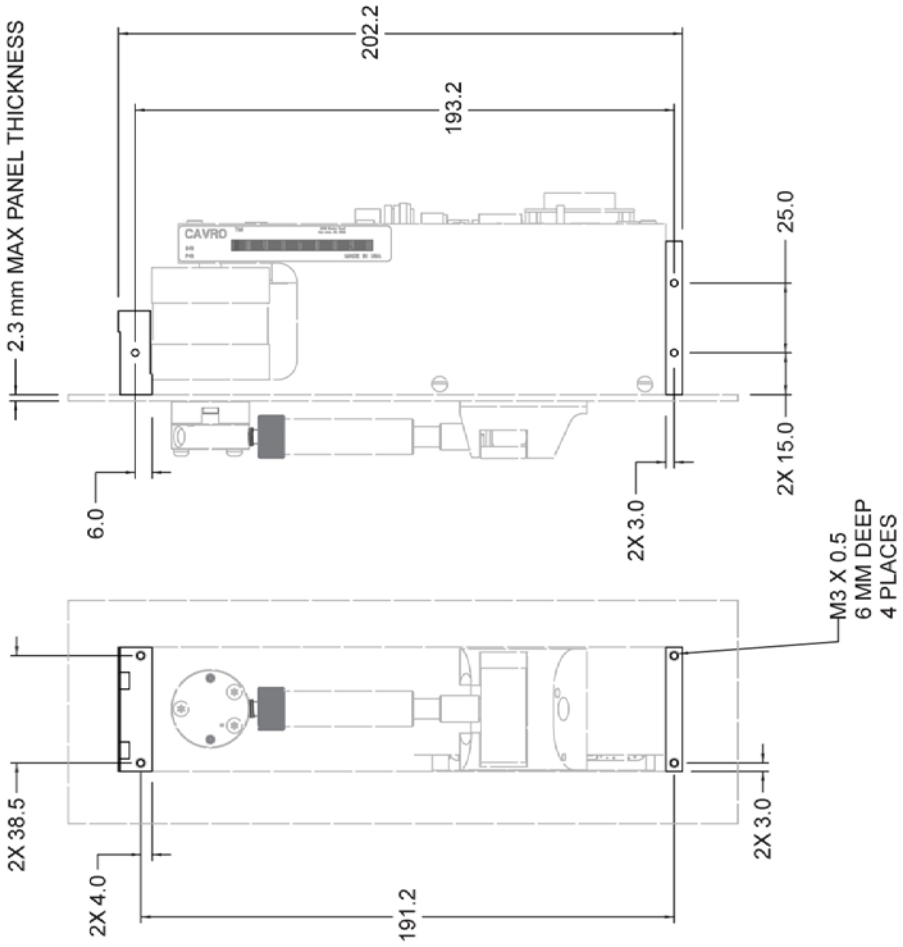

Figure 2-8 *Centris Pump with Side Mounting Kit*

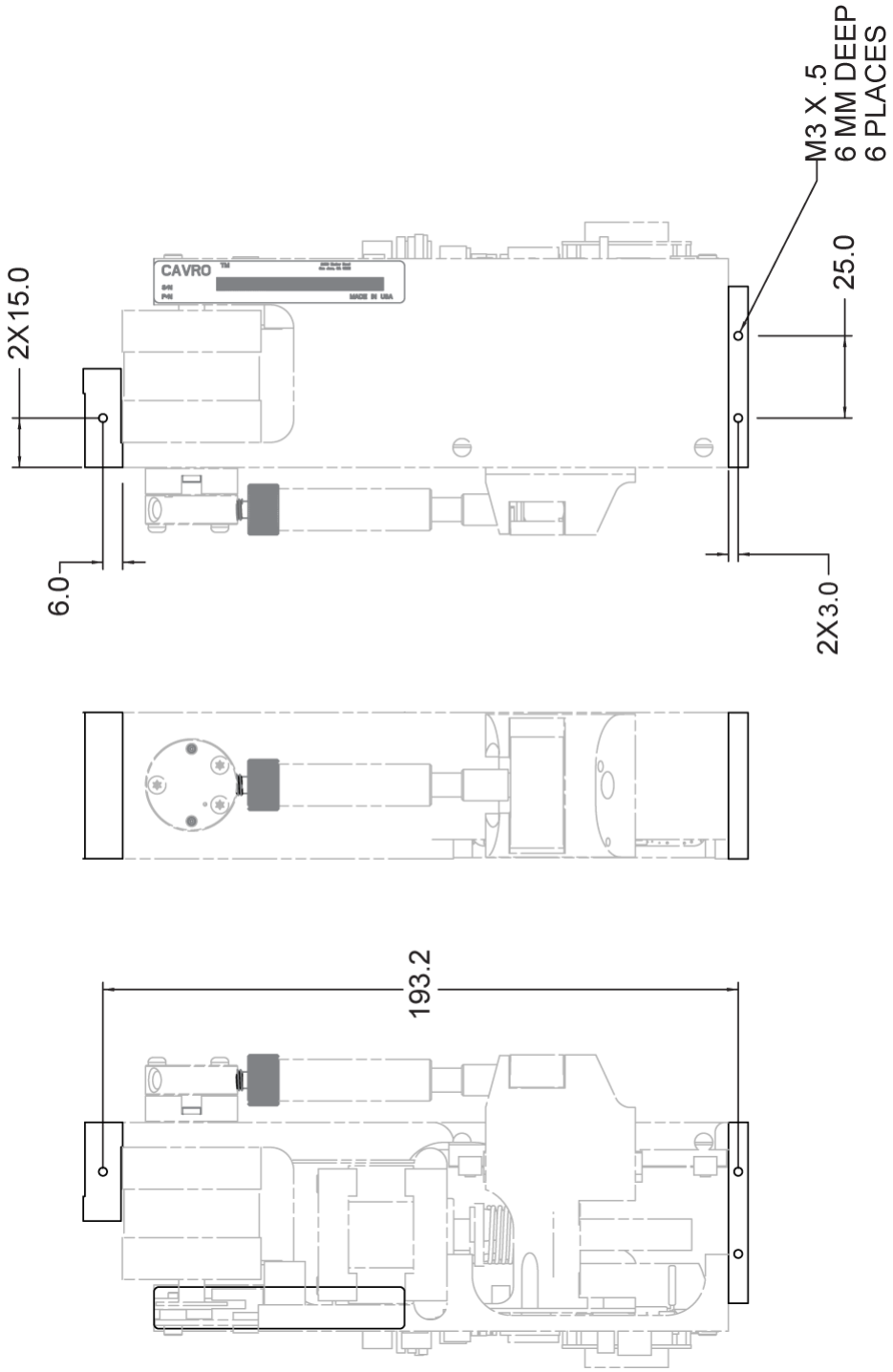

3 Software Communication

This chapter describes how to communicate with the Centris pump through an RS-232, RS-485, or CAN (Controller Area Network) interface.

This chapter includes these topics:

- Centris Addressing Scheme
- Communication Protocols
- Using the Centris Command Set
- Initialization
- Operating Commands
- Error Codes and Pump Status

3.1 Centris Addressing Scheme

As part of the communication protocol, an address for each pump must be specified. When using serial communication, the user has the option of addressing a single pump, two pumps (dual device), four pumps (quad device), or all 16 pumps (all devices), depending on the address byte used. Each physical address in the address switch corresponds to a hexadecimal value, as shown in Table 3-1, Hexadecimal Addressing Scheme.

Table 3-1 *Hexadecimal Addressing Scheme*

Address (hex)		Device
RS-232/RS-485	**CAN**	
31	0	Master Address (master controller, personal computer, etc.)
32-40	1-F	Addresses single device
41-4F	N/A	Addresses two devices at a time (dual device)
51-5D	N/A	Addresses four devices at a time (quad device)
5F	N/A	Addresses all devices on the bus

For example, a Centris pump with address switch set to 0 is addressed as device “31h” in the RS-232 or RS-485 communication protocol, hardware address 1 is addressed as device “32h,” and so on.

Table 3-2, Address Switch Settings in Hex (ASCII), shows the different address switch settings for each of these configurations.

Table 3-2 *Address Switch Settings in Hex (ASCII)*

Address (hex)	Single Device		Dual Device		Quad Device		All Devices	
	Hex Address	**ASCII Address**	**Hex Address**	**ASCII Address**	**Hex Address**	**ASCII Address**	**Hex Address**	**ASCII Address**
0	31	1	41	A	51	Q	5F	_
1	32	2						
2	33	3	43	C				
3	34	4						
4	35	5	45	E	55	U		
5	36	6						
6	37	7	47	G				
7	38	8						
8	39	9	49	I	59	Y		
9	3A	:						
A	3B	;	4B	K				
B	3C	<						
C	3D	=	4D	M	5D	]		
D	3E	>						
E	3F	?	4F	O				
F Self Test	40	@						

The user can communicate with all pumps in the chain by using address “5Fh,” for example to initialize all pumps at once. Then each pump can be controlled independently by using addresses “31h” to “40h.”

Note: *Multiple address commands cannot be used to determine device status or to request reports. Each device must be queried separately to gather status or generate a report.*

3.2 Communication Protocols

Three communication protocols are available:

- OEM communications protocol
- Data Terminal (DT) protocol
- CAN protocol

The Centris firmware automatically detects the communication protocol. If serial communication protocol is detected, the CAN clock is automatically turned off until the next on/off cycle. When the pump detects the OEM protocol, it ignores the DT protocol until the next power cycle. Similarly, when the Centris pump detects the DT protocol, the OEM protocol is ignored until the next power cycle.

The DT protocol can be run via an ASCII data terminal because no sequence numbers or checksums are used. For instructions on using a Microsoft Windows Terminal Emulator, see “Using DT Protocol with Microsoft Windows” in this chapter.

Line Sync Characters

The insertion of line sync characters, <FFh>, outside of the start and end characters in the pump response, can be enabled or disabled using the configuration command [U<n>]. This is required only for backward compatibility with existing host software. By default, [U38], line sync characters are inserted at the beginning of the command response. The insertion of line sync characters can be enabled at the beginning and end of the command response using [U40] or completely disabled using [U39].

Note: *Tecan Systems recommends using the OEM protocol for RS-232 and RS-485 interfaces. It provides increased error checking through the use of checksums and sequence numbers.*

3.2.1 OEM Communication Protocol

OEM communication is a robust protocol that includes automatic recovery from transmission errors. Table 3-3, OEM Protocol describes each setting within the OEM communication protocol.

Table 3-3 *OEM Protocol*

Parameter	Setting
Character Format	
Baud rate	9600 or 38400
Data bits	8
Parity	None
Stop bit	1
Command Block (see “OEM Protocol Command Block Characters” for details)	
1	STX (^B or 02h)
2	Pump address
3	Sequence number
3+n	Data block (length n)
4+n	ETX (^C or 03h)
5+n	Checksum
Answer Block (see “OEM Protocol Answer Block Characters” for details)	
1	STX (^B or 02h)
2	Master address (0 or 30h)
3	Status code
3+n	Data block (length n)
4+n	ETX (^C or 03h)
5+n	Checksum

OEM Protocol Command Block Characters

The command block characters in the OEM communication protocol are described below. All characters outside the command block are ignored.

When developing a parsing algorithm, the programmer should key on the STX as the beginning of the answer block and the checksum (character after the ETX) as the end of the answer block.

STX (^B or 02h)

The STX character indicates the beginning of a command

Pump Address

The pump address is a hexadecimal number specific for each pump.

Sequence Number/Repeat Flag

The sequence number is a single byte that conveys both a sequence number (legal values: 0 to 7) and a bit-flag indicating that the command block is being repeated due to a communications breakdown. The sequence number is used as an identity stamp for each command block. Since it is only necessary that every message carry a different sequence number from the previous message (except when repeated), the sequence number may be toggled between two different values (e.g., “1” and “2”) as each command block is constructed. During normal communication exchanges, the sequence number is ignored. If, however, the repeat flag is set, the pump compares the sequence number with that of the previously received command block to determine if the command should be executed or merely acknowledged without executing.

Note: *If the operator chooses not to use this option, the sequence number can be set to a fixed value of 1 (31h).*

The following two scenarios clarify this error detection mechanism.

Scenario 1.

1 The computer sends a command block stamped with sequence #1 to the pump.

2 The pump receives the command, sends an acknowledgement to the PC, and executes it.

3 Transmission of the acknowledgement message is imperfect; the PC does not receive it.

4 The PC waits 100 ms for the acknowledgement, then retransmits the command block with the sequence number left at 1 and the repeat bit set to indicate a retransmission.

5 The pump receives the transmission, identified as such by the repeat bit.

6 The pump checks the sequence number against that of the previously received command block. Noting a match, the pump sends an acknowledgement to the PC, but it does not execute the command (since it has already been executed).

7 The PC receives the acknowledgement and continues with normal communications.

8 The next command block is stamped with sequence #2 to indicate a new command.

Scenario 2.

1 The computer sends a command block stamped with sequence #1 to the pump.

2 The pump never receives the command due to a communication error and thus does not send an acknowledgement to the PC.

3. The PC waits 100 ms for the acknowledgement, then retransmits the command block with the sequence number left at 1 and the repeat bit set to indicate a retransmission.
4. The pump receives the retransmission, identified as such by the repeat bit.
5. The pump checks the sequence number against that of the previously received command block. Noting a mismatch, the pump recognizes this as a new command block and sends an acknowledgement to the PC. It then executes the command.
6. The PC receives the acknowledgement and continues with normal communications.
7. The next command block is stamped with sequence #2 to indicate a new command.

The sequence number/repeat byte is constructed as follows:

Bit #	7	6	5	4	3	2	1	0
Value	0	0	1	1	REP	SQ2	SQ1	SQ0

REP

0 for non-repeated / 1 for repeated

SQ0 – SQ2

Sequence value, as follows:

Sequence Value	SQ2	SQ1	SQ0
1	0	0	1
2	0	1	0
3	0	1	1
4	1	0	0
5	1	0	1
6	1	1	0
7	1	1	1

Note: *Bits 4 through 7 are always fixed to the values shown.*

Data Block (length n)

The data block consists of the data or commands sent to the pump or host (this is an ASCII string). When the pump is responding to a move or [Q] command, the data block length is 0 (i.e., no data string exists).

ETX

The ETX character indicates the end of a command string.

Checksum

The checksum is the last byte of the message string. All bytes (excluding line synchronization and checksums) are XORed to form an 8-bit checksum. This is appended as the last character of the block. The receiver compares the transmitted value to the computed value. If the two values match, an error free transmission is assumed; otherwise, a transmission error is assumed.

OEM Protocol Answer Block Characters

The answer block characters in the OEM communication protocol are described below.

Only the unique answer block entries are listed in this section. For common commands and answer block commands (characters), see the previous section, “OEM Protocol Command Block Characters.”

Master Address

The master address is the address of the host system. This should always be 30h (ASCII value “0”).

Status and Error Codes

The status and error codes define pump status and signal error conditions. For a description of status and error codes, see “Error Codes and Pump Status” in this chapter.

3.2.2 Data Terminal (DT) Protocol

The DT protocol can be used easily from any terminal or terminal emulator capable of generating ASCII characters at 9600 baud, 8 bits, and no parity.

Table 3-4 *DT Protocol*

Character Format	
Parameter	**Setting**
Baud rate	9600 or 38400
Data bits	8
Parity	None
Stop bit	1
Command Block (see “DT Protocol Command Block Characters” for details)	
1	Start command (ASCII “/” or 2Fh)
2	Pump address
2+n	Data block (length n)
3+n	Carriage Return ([CR] or 0Dh)
Answer Block (see “DT Protocol Answer Block Characters” for details)	
1	Start answer (ASCII “/” or 2Fh)
2	Master address (ASCII “0” or 30h)
3	Status character
3+n	Data block (if applicable)
4+n	ETX (03h)
5+n	Carriage return (0Dh)
6+n	Line feed (0Ah)

DT Protocol Command Block Characters

The command block characters in the DT communication protocol are described below.

Start Block

The start character indicates the beginning of a message block.

Pump Address

The pump address is an ASCII character specific to each pump.

Data Block (length n)

The data block consists of the ASCII data or commands sent to the pump or host.

End Block

The end character indicates the end of a message block.

DT Protocol Answer Block Characters

The answer block characters comprising the DT communication protocol are described below.

Only unique answer block entries are listed in this section. For information on command and answer block commands (characters), see the previous section, “OEM Protocol Command Block Characters.”

Master Address

The master address is the address of the host system. This should always be 30h (ASCII “0”).

Status Character

The status and error codes define pump status and signal error conditions. See the description of the [Q] command in “Error Codes and Pump Status.”

Data Block

This is the response from all reports commands with the exception of the [Q] command.

Carriage Return (0Dh)/Line Feed (0Ah)

This character terminates the reply block.

3.2.3 Using DT Protocol with Microsoft Windows

The Centris pump can be controlled in DT protocol mode directly from the Microsoft Windows terminal accessory.

To communicate with the Centris pump using Windows, follow these steps:

1. To connect the Centris pump to a communications port on the PC, first select the **Start Programs/Accessories/Communications Hyperterminal** menu and choose **Run**.
2. In the Run dialog box, type **Hyperterm.exe**. The Connection Description dialog box appears.
3. Enter a name for the connection and select an icon, then click **OK**. The Phone Number dialog box appears.
4. Select the following in the fields provided:

   Connect using: Direct to <communication port> (usually COM1 or COM2, depending on how the hardware is set up)

   Click **OK**. The COM Properties dialog box appears.
5. Select the following in the fields provided:
   - Bits per second: 9600
   - Data bits: 8
   - Parity: None
   - Stop bits: 1
   - Flow control: None
6. Click **OK**.
7. Select the **File** menu, and choose **Properties**. The Properties dialog box appears.
8. Select the **Settings** tab, and enter or select these options:
   - Function, arrow, and Control keys act as:
     - Select “Terminal keys”
   - Emulation:
     - Select “Autodetect”
     - Enter “500” in Backscroll buffer lines
   - Click the **ASCII Setup** button. The ASCII Setup dialog box appears.
9. Enter or select these options:
   - Select “Send line ends with line feed”
   - Select “Echo typed characters locally”
   - Enter a Line delay of “0”
   - Enter a Character delay of “0”
   - Select “Wrap lines that exceed terminal width”
10. Click **OK** to close the ASCII Setup dialog box, then click **OK** to close the Properties dialog box.
11. Set the pump address to 0 or the appropriate address.
12. The communication protocol is detected automatically.

13 Power on the pump and initialize it by typing /1ZR and pressing **Enter**.

To run the pump, see the commands listed in “Using the Centris Command Set” in this chapter.

3.2.4 CAN Interface Communications

CAN (Controller Area Network) is a two-wire, serial communication bus. It eliminates polling sequences that verify task completion. Using CAN, pumps asynchronously report to the master or host when they have finished the current task.

Note: *All Tecan Centris systems use CAN controller chips compatible with Phillips Semiconductor CAN bus specification, version 2.0.*

When using the CAN interface, termination resistors (120 ohm) are necessary at both ends of the bus. The pump PCBA includes CAN termination resistor that can be enabled by installing Jumper J9.

CAN Messages

CAN messages consist of *frames*. Each frame has an 11-bit message identifier (MID) and a 4-bit length identifier. The bits:

- Indicate to which device on the bus the message is directed
- Identify the message type
- Show the direction of the message (to or from the master device)
- Represent the length of the data block. Data blocks can be from zero to eight bytes in length. Any message that requires more than eight bytes must be sent in a series of multi-frame messages. The receiving unit then assembles the separate frames into one long string.

CAN Message Construction

Each message frame begins with the Message ID (MID). The data block (up to 8 bytes in length) follows the MID and length information. The MID makes up three nibbles that are transmitted first in a message frame. The bits are grouped as shown in Figure 3-1, ’CAN Message Structure”.

Figure 3-1 *CAN Message Structure*

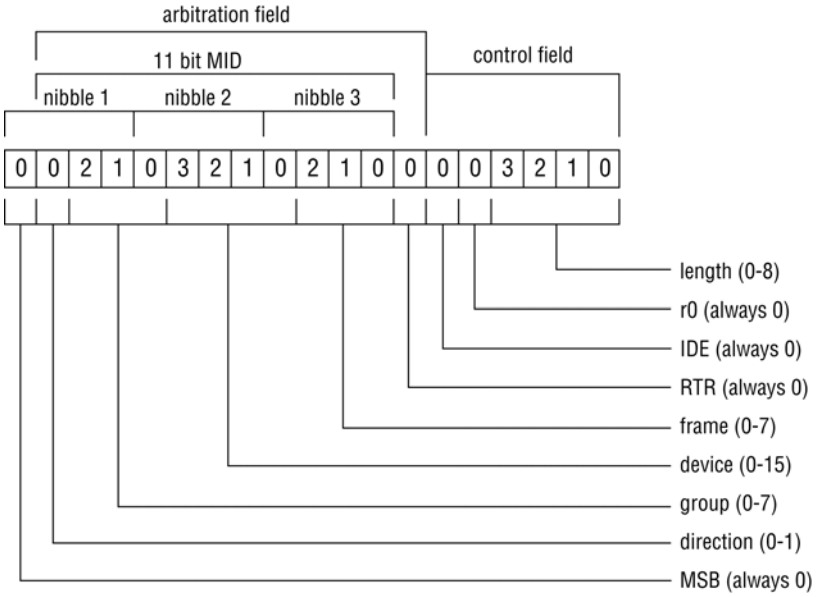

Direction

The direction bit lets the devices on the bus know whether the current message is to or from the master. “0” means that the message is from master to slave; “1” means the message is from the slave to the master.

Note: *Peer-to-peer messaging is not supported.*

Group

Each device type on the CAN bus has a group assignment (0-7). The Centris is assigned to group 2. Group number “1” is reserved for the boot request procedure.

Device

This is the address of the module in the particular group. Each group can have up to 16 devices. The address value is 0 to 15.

Frame

This lets the device know what type of message is coming. See “CAN Frame Types” in this chapter.

RTR

This bit is not used in Tecan Systems’ CAN implementation and should always be set to 0.

IDE

This is always set to 0 for standard format frames.

r0

Reserved bit, set to 0.

Length

This is the length of the data block in the message. Data blocks can be from zero to eight bytes in length.

CAN Data Block

The data block tells the pump what to do. Pump commands are sent in ASCII just like in RS-232 or RS-485. For command strings that are more than eight bytes in length, multi-frame messages are used. This permits long program strings to be sent as with the other communications interfaces (remember that the Centris command buffer size is 255 characters).

CAN Frame Types

The frame types allow each device to know what type of command is coming in and enables faster processing of commands. Pumps respond to the frame types described below.

“On-the-Fly” Commands (V and T), Type 0

Normal commands use a frame type 1 (i.e., “Action Commands”). Since commands sent over the CAN bus with a particular frame type must complete before a subsequent command using the same frame type can be issued, a different ID must be used when issuing an “on-the-fly” command. For this reason, “on-the-fly” commands must be issued over the CAN bus with a frame type of “0” (zero).

Action Frames, Type 1

This frame type is used for action commands, such as Initialization commands, Movement commands, Valve commands, or to set pump operating parameters. When multi-frame messages are used to send an action command, this frame is the end message sent to the pump.

Common Commands, Type 2

This frame type is used for commands that are common to every device on the bus. The frame type is set to 2 and the command is a single ASCII character in the data block. The single ASCII character is described below.

ASCII (HEX)	Command	Description
30	0	Reset mode. This resets the pump and begins the boot request procedure. This is equivalent to power cycling the pump. This acts like a [!] command.
31	1	Start loaded command. Just like sending an [R] command after a string has been loaded.
32	2	Clear loaded command. This clears out the command buffer. This acts like a [C] command.
33	3	Repeat last command. This command does the same thing as the [X] command.
34	4	Stop action immediately. This acts like a [T] command.

Multi-Frame Start Message, Type 3

This frame type lets the pump know that the next message is longer than the 8-byte maximum for each frame. Subsequent frames follow to complete the message.

Multi-Frame Data, Type 4

This frame type is used to identify a frame in the middle of a multi-frame message. The last frame of a multi-frame message for action commands must be type 1. The last frame of a multi-frame message response from the pump for report commands is type 6.

Note: *There is no type 5 frame.*

Report/Answer Commands, Type 6

This frame type is used to get information back from the pump. It is similar in operation to the report and query commands (i.e., [?], [:] etc.) used in the OEM and DT protocols. Sending a numeric valve (in ASCII) is equivalent to [? [n]] used in the OEM and DT protocols. For all other report or query commands, the actual command character is sent followed by parameters, if any.

When the pump responds to a query, the first byte of the data block is the status byte. It is defined like the status byte in the RS-232 and RS-485 protocols. The next byte is a null character. The remaining six bytes are for the response in ASCII. If the pump is only reporting current status, the message is only two bytes long. If the reply consists of more than six bytes, multi-frame messages are used.

CAN Response

All messages of frame type 0, 1, and 2 are acknowledged with an empty message having data length of zero. Messages of frame type 6 do not generate acknowledge messages.

The device sends an answer frame after completing the command string execution. The answer frame contains the command string execution status. The first two bytes of the data block in answer frame are the status bytes. The first byte contains an error code (same error codes used with the RS-232 and RS-485 protocols) added to 0x20h. The second byte always contains the value 0x60h. The remaining six bytes are for the response in ASCII. If the pump is only reporting current status (Action, Set, or Common command), the message is only two bytes long. If the reply consists of more than six bytes (Query or Report), multi-frame messages are used.

Heartbeat Message

When the device is configured with the heartbeat message enabled [U60], the device transmits a report frame periodically with the data bytes containing the status of the device. The interval between messages can be configured using the [b] command. See Section 3.6.5, Extended Error Codes for details on heartbeat message format.

Handling of Pump Boot Requests

When the pump is first powered up or receives a system reset command (frame type 2, command 0), the pump notifies the host of this condition by sending a boot request message at 100 millisecond intervals until it receives a proper response. The group number is 1 for the boot request message. The frame type is 2 when the pump sends messages to the host, and the frame type must be 0 when the host replies to the boot request.

Example 1. The pump is set to address 0

Pump sends:

Dir	Group	Device	Frame	RTR	Length
1	001	0000	010	0	0000

Host acknowledges:

Dir	Group	Device	Frame	RTR	Length	Node ID	Slave ID
0	001	0000	000	0	0010	0010 0000	0010 0000

Host acknowledges the boot request with:

Dir = 0	Host to slave
Group = 1	Boot request response group
Device = 0	Always 0 in boot response
Frame = 0	Boot request response frame
RTR = 0	Always 0
Length = 2	Two data bytes in return message

Note:
Boot MID is the same for all nodes

Node ID	Group ID (2) + Pump Address (0)	“ ”	00h	Must respond with Group & Address
Slave ID	Same as Node ID (hex 20)	“ ”	00h	

Example 2. The pump is set to address 6

Pump sends:

Dir	Group	Device	Frame	RTR	Length
1	001	0110	010	0	0000

Host acknowledges:

Dir	Group	Device	Frame	RTR	Length	Node ID	Slave ID
0	001	0000	000	0	0010	0010 0110	0010 0110

Host acknowledges the boot request with:

Dir = 0	Host to slave	**Note**: Boot MID is the same for all nodes
Group = 1	Boot request response group	
Device = 0	Always 0 in boot response	
Frame = 0	Boot request response frame	
RTR = 0	Always 0	
Length = 2	Two data bytes in return message	

Node ID	Group ID (2) + Pump Address (6)	“&”	Hex	26
Slave ID	Same as Node ID (hex 26)		Hex	26

The pump saves the Node ID to use for message filter Group ID.

Note: *The slave ID does not have to be the same as the node ID. The pump can be assigned any number between 0 and 0x7F (127) for the slave ID.*

CAN Host and Pump Exchanges

When a slave pump receives a command, finishes a command, encounters an error condition, or responds to a query, it sends an answer frame to the host using the same frame type as the command it belongs to. The answer frame format is device dependent. Generally, it has the following format:

[MID><DLC><Answer>

[MID>

11-bit message identifier. The direction bit is 1. The group number and the frame type are the same as received. Device ID is the slave message ID assigned by the host.

<DLC>

4-bit data length code

<Answer>

Data bytes block. The first byte of the data block is always the status byte, which is an error code (same error codes used with the RS-232 and RS-485 protocols) added to 0x20h. The second byte is always 0x60h. The remaining bytes contain the response in ASCII format. If the reply consists of more than six bytes, multi-frame messages are used.

Note: *Only one command of a given frame type can be in progress at any one time; e.g., after issuing a command to a slave pump with frame type = 1, the master must wait for the answer with frame type = 1 before issuing the next command with frame type = 1. If the user insists on sending the command, a command overload status results. The [F] command is an exception to this rule for sending commands on the fly.*

Several commands with different frame types can be in progress at the same time; e.g., an action command and a query command.

Following are typical exchanges between the host and slave for action commands, multi-frame commands, common commands, and query commands.

Action Command

The host commands [ZR] to a pump, and the pump is set to address 0.

Host sends:					
0	XXXXXXX	001	0	0010	ZR
Dir	Slave ID	Frame Type	RTR	DLC	Data bytes
Pump acknowledges:					
1	XXXXXXX	001	0	0000	
Dir	Slave ID	Frame Type	RTR	DLC	
After executing the command, pump reports status:					
1	XXXXXXX	001	0	0010	<20h><60h>
Dir	Slave ID	Frame Type	RTR	DLC	Data bytes

Note: *The mixed formats ASCII and hexadecimal are used in the data bytes block. The hexadecimal number is bracketed (< >). The rest of the fields are displayed in binary format.*

Multi-Frame Command

The host commands [Z3S5gIA3000OgHD300G10G5R] to a pump, and the pump is set to address 0.

Host sends:

0	XXXXXXX	011	0	1000	Z3S5gIA3
Dir	Slave ID	Frame type	RTR	DLC	Data bytes
0	XXXXXXX	100	0	1000	000OgHD3
Dir	Slave ID	Frame type	RTR	DLC	Data bytes
0	XXXXXXX	001	0	1000	00G10G5R
Dir	Slave ID	Frame type	RTR	DLC	Data bytes

Pump acknowledges:

1	XXXXXXX	001	0	0000	
Dir	Slave ID	Frame type	RTR	DLC	

After executing the command, pump reports status:

1	XXXXXXX	001	0	0010	<20h><60h>
Dir	Slave ID	Frame type	RTR	DLC	Data bytes

Note: *For multi-frame commands, the pump only acknowledges the last frame.*

Common Command

After the host has sent command [A1000A0] to the pump, it sends command 1 of frame type 2 to a pump and makes the pump move. The pump is set to address 0.

Host sends:

0	010	0000	010	0	0001	1
Dir	Group	Device	Frame type	RTR	DLC	Data bytes

Query Command

The host commands Q of frame type 6 to a pump, and the pump is set to address 1.

Host sends:

0	XXXXXXX	110	0	0010	Q
Dir	Slave ID	Frame Type	RTR	DLC	Data bytes

Pump reports:

1	XXXXXXX	110	0	0010	<20h><60h>
Dir	Slave ID	Frame Type	RTR	DLC	Data bytes

Report Command

The host sends command report 63 of frame type 6 to a pump, and the pump is set to address 1.

Host sends:

0	XXXXXXX	110	0	0010	63
Dir	Slave ID	Frame Type	RTR	DLC	Data bytes

Pump reports:

Frame 1 – Type 3

1	XXXXXXX	011	0	1000	<20h><60h><CENTRI>
Dir	Slave ID	Frame Type	RTR	DLC	Data bytes

Frame 2 – Type 4

1	XXXXXXX	100	0	1000	<S-V1.000>
Dir	Slave ID	Frame Type	RTR	DLC	Data bytes

Frame 3 – Type 6

1	XXXXXXX	110	0	1000	<–07/2008>
Dir	Slave ID	Frame Type	RTR	DLC	Data bytes

Note: *For a multi-frame reply, the start frame is type 3, the middle frame is type 4, and the last frame is type 6.*

3.3 Using the Centris Command Set

The Centris pump features a robust command set which allows a wide range of parameters to be defined by the user. Many of the commands have default values; however, the default values may not provide the optimal settings for your application. Take a moment to familiarize yourself with each command in order to obtain the best performance for your application.

For a quick summary of all commands, see Appendix E, “Command Quick Reference”.

When problems are detected, the Centris pump sends an error code. The error codes are described in “Error Codes” at the end of this chapter.

Note: *Some commands are not used in the same way in serial and CAN communication interfaces. For a list of CAN commands and differences from the serial command set, see Appendix F, “Command Quick Reference”.*

3.3.1 Command Execution Guidelines

To use the commands properly, keep the following in mind:

- All commands, except Report commands and most control commands, must be followed by an [R] (execute) command.
- Single or multiple command strings can be sent to the pump.

  For example:
  - A single command such as [A6000R] moves the plunger to position 6000.
  - A *multi-command string* such as [IA6000OA0R] moves the valve to the input position, moves the plunger to position 6000, turns the valve to the output position, and finally returns the plunger to position 0.
- The pump’s command buffer holds a maximum of 255 characters. If a command is sent without the [R] (execution) command, it is placed into the buffer without being executed. If a second command is sent with an [R] at the end before the first command is executed, the second command overwrites the first command (i.e., the first command string is erased).
- Once a command is executed, new commands are not accepted until the sequence is completed. Exceptions to this rule include “on-the-fly” commands and report commands.
- When a command is sent, the pump answers immediately if an error is detected. This is applicable even if the command is loaded partially (without an [R]). See Section 3.6, Error Codes and Pump Status for details.
- If an error occurs during command execution, the pump terminates command execution and erases the loaded command string. The host computer can query the status of the device and error code using the [Q] command.
- Response time from the reception of the last byte of a command from host to transmission of the first character (answer message or acknowledge message) from device is usually less than 5 ms.

- If the device is busy executing a command string, the status of the device (Busy or Ready) can be queried using the [Q] command with a minimum of 100 ms between commands.
- Always run liquid through the syringe and valve when issuing a move command. Failure to do so may damage the valve and syringe.

- Keep fingers out of the syringe slot while the pump is running. Failure to do so can result in injury.

Command Syntax and Notes

The syntax for each command in the command set is:

<n>	Numerical value within a given range
0–6000	Range of numerical values allowed
(n)	Default value

Note:

- *Multiple values of <n> in a single command must be separated by commas.*
- *Square brackets, [ ], are used to distinguish commands and should not be sent as part of the command strings.*
- *Commands are case-sensitive.*

3.3.2 Pump Configuration Commands

Centris pumps are preconfigured at the factory to the default settings. The firmware, however, allows the user to configure the pump to meet his or her specific requirements. Configuration options available to the user include valve type, baud rate, communication protocol, auto-run mode, and syringe volume.

U<n> ***Write Pump Configuration to Non-Volatile Memory***

The [U] command is used to write configuration information to the non-volatile memory. The pumps are configured during the manufacturing process but can be reconfigured at any time with the following [U] commands.

Table 3-5 *Write Pump Configuration Command Values*

Value<n>	Description
0	No valve.
1	3-way valve (Y-valve) (default)
2	4-way valve
7	6-port distribution valve
8	9-port distribution valve
9	4-port dual-loop valve
11	3-port distribution valve
12	12-port distribution valve
20	Enable diagnostics (self-test) if address = 15 (default)
21	Disable diagnostics (self-test) if address = 15
30	Set run from NVRAM mode
31	Clear run from NVRAM mode (default)
35	Auto-detect serial communication protocol (default)
36	Use OEM serial communication protocol
37	Use DT serial communication protocol
38	Enable line sync character at start of message only (default)
39	Disable line sync characters
40	Enable line sync characters at start and end of message
41	Set baud rate to 9600 (default)
47	Set baud rate to 38400
51	Set CAN Baud rate to 100 Kbaud (default)
52	Set CAN Baud rate to 125 Kbaud
53	Set CAN Baud rate to 250 Kbaud
54	Set CAN Baud rate to 500 Kbaud
55	Set CAN Baud rate to 1 Mbaud
60	Enable Heartbeat message (CAN)
61	Disable Heartbeat message (CAN) (default)

Table 3-5 *Write Pump Configuration Command Values (cont.)*

Value<n>	Description
90	Set syringe volume - 250 µL
91	Set syringe volume - 1250 µL (default)
92	Set syringe volume - 5000 µL
93	Set syringe volume - 50 µL
94	Set syringe volume - 100 µL
95	Set syringe volume - 500 µL
96	Set syringe volume - 1000 µL
97	Set syringe volume - 2500 µL
98	Set syringe volume - 12500 µL

Note: *[U] commands take effect on the pump's next power-up.*

Note: *If the address is set to F (15), installing jumper J11 overrides [U21] and forces the pump into self-test mode. Please see the table below for examples of self-test behavior.*

Jumper J11 present	Self-test enabled (U20/U21)	Actual operation (address 15)
No	Yes (U20, default)	Self-test
No	No (U21)	User control
Yes	No (U21)	Self-test
Yes	Yes (U20)	Self-test

Note: *Installing J8 forces the baud rates to default values of 9600 and 100K. These settings are maintained until jumper J8 is removed and the pump completes an on/off cycle.*

Caution! *Please be sure that the firmware and hardware configurations match, especially with respect to valve and syringe configuration. Failure to do so may damage the pump.*

3.4 Initialization

Initialization verifies correct operation and position of the syringe and valve. It is required before issuing move commands to the valve or syringe. The input and output positions of the valve are assigned depending on the initialization parameters.

The plunger initializes with the minimum force required to move. The top of the syringe is recognized when upward movement of the plunger causes an overload condition (hard stop). After reaching hard stop, the plunger backs off according to the initialization gap setting and sets this position as home (A0) for subsequent plunger moves.

Caution! *Initialization of the plunger motor results in a small amount of fluid movement. This pumping is from and then back into the default input tubing line for a given valve configuration. Take care that the pump is properly plumbed and that this plunger movement does not result in spills.*

3.4.1 Initialization Commands

Note: *Not all initialization speeds are suitable for all syringe configurations. Centris pumps with large syringes, or operating in instruments with narrow flow restrictions generating backpressure, may require initialization at slow initialization speeds to avoid triggering initialization errors.*

Z<n_1>, <n_2>, <n_3> Initialize Plunger and Valve Drive (CW Polarity)

The [Z] command initializes the plunger drive and homes the valve in a clockwise direction. Valve ports are numbered 1–X, starting in a *clockwise* direction at the first port after the syringe port.

n_1 = Set initialization speed
n_2 = Set initialization input port
n_3 = Set initialization output port

The parameters are described below.

Z Parameter	Value	Description
<n_1>	4–25	Initializes at the speed code [n]. See the [S] command for list of speed codes (default 7).
<n_2>	0	Sets initialization input port to port 1 (default)
	1–X	Sets initialization input port for distribution valves, where X is the number of ports on the valve.
<n_3>	0	Sets initialization output port to port X, where X is the number of ports on the valve. (default)
	1–X	Sets initialization output port for distribution valves, where X is the number of ports on the valve.

Initialization sequence:

- Initialize the valve; seek the index flag in CW direction.
- Set the valve to the designated input port, moving in CW direction.
- Home the plunger to mechanical stop. This is the plunger in absolute 0 position (?0).
- Move the plunger down by k increments (init offset).
- Apply the backlash (K increments down, K increments up). This is the plunger's home (A0) position (?1).
- Set the valve to the designated output port, moving in CW direction.

Y <n_1>, <n_2>, <n_3> Initialize Plunger and Valve Drive (CCW Polarity)

The [Y] command initializes the plunger drive and homes the valve in a *counter-clockwise* direction. Valve ports are numbered 1-X in a counter-clockwise direction starting with the first port after the syringe port.

n_1 = Set initialization speed
n_2 = Set initialization input port
n_3 = Set initialization output port

The parameters are described below.

Y Parameter	Value	Description
<n_1>	4–25	Initializes at the speed code [n]. See [S] command for list of speed codes (default 7).
<n_2>	0	Sets initialization input port to port 1 (default)
	1–X	Sets initialization input port for distribution valves, where X is the number of ports on the valve.
<n_3>	0	Sets initialization output port to port X, where X is the number of ports on the valve. (default)
	1–X	Sets initialization output port for distribution valves, where X is the number of ports on the valve.

Initialization sequence:

- Initialize the valve. Seek the index flag in CCW direction.
- Set the valve to the designated input port, moving in CCW direction.
- Home the plunger to mechanical stop. This is the plunger in absolute 0 position (?0).
- Move the plunger down by k increments (init offset).
- Apply the backlash (K increments down, K increments up). This is the plunger's home (A0) position (?1).
- Set the valve to the designated output port, moving in CCW direction.

W<n> ***Initialize Plunger Drive***

The [W] command initializes the plunger drive only (commonly used for valveless pumps). Because the valve is not initialized, only plunger force and/or speed can be set. If the device is configured with a valve, [W] works only if the valve is already initialized and not in a bypass position.

W Parameter	Value	Description
<n>	4–25	Initializes at the speed code [n]. See [S] command for list of speed codes (default 7).

Initialization sequence:

- Home the plunger to a mechanical stop. This is the plunger in absolute 0 position (?0).
- Move the plunger down by k increments (init offset).
- Apply the backlash (K increments down, K increments up). This is the plunger's home (A0) position (?1).

w<n_1>, <n_2> *Initialize Valve Drive*

The [w] command initializes the valve drive only. Because the plunger is not initialized, only the initialization port can be set. If the device is configured with no valve [U0], the [w] command gives error #8 – Valve not configured.

n_1 = Set port
n_2 = Set valve homing and port numbering direction

The parameters are described below.

w Parameter	Value	Description
<n_1>	1–X	Set valve position after initialization, where X is the number of ports on the valve (default 1).
<n_2>	0	Valve homes in a *clockwise* direction; valve ports numbered in a *clockwise* direction (default)
	1	Valve homes in a *counterclockwise* direction; valve ports numbered in a *counterclockwise* direction.

z *Simulated Plunger Initialization*

The [z] command simulates an initialization of the plunger drive, however, no mechanical initialization occurs. The current position of the linear encoder is set as the home position (A0). This command does not initialize the valve drive.

This command can be used after a plunger overload error, to regain control of the pump. After recovering from the overload condition using the [z] command, the pump must be reinitialized using the
Z<n_1>, <n_2>, <n_3>
or
Y<n_1>, <n_2>, <n_3>
commands to set the true home position. Step loss detection is disabled until the next plunger initialization command is issued.

Caution! *Incorrect use of this command can damage the device.*

3.5 Operating Commands

3.5.1 Valve Commands

Valve commands position the input and output channels to the specified ports. Similar valve commands cause different actions depending on whether you are using non-distribution valves or distribution valves.

With ***non-distribution valves***, any combination of two adjacent valve ports, including or excluding the syringe port, may be used. With ***distribution valves***, the syringe port is a common port, always included as one of the two valve ports in use.

The initialization command [Z], [Y], or [w] determines:

- The direction in which the valve homes during initialization (clockwise or counterclockwise)
- The direction in which the ports are numbered, starting with the syringe port (clockwise or counterclockwise)

After initialization, the direction in which the valve moves is specific to the valve type and command.

With ***non-distribution valves***, the [I], [O], [B], or [E] command specifies the combination of valve ports to be connected. The valve moves following the shortest path available.

For example, in Figure 3-3, if the 3-port non-distribution valve has been initialized with the [Z] command, the ports are numbered as shown in the top diagram (clockwise). Issuing an [O] command aligns the syringe port with port 2, as shown.

Figure 3-2 shows an accurate rendering of the 3-port non-distribution valve. Figure 3-3 shows simplified drawings to illustrate the valve positions.

Figure 3-2 *3-Port Non-Distribution Valve*

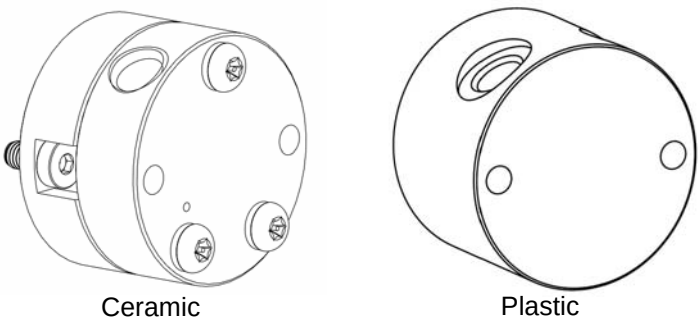

Figure 3-3 *Valve Position Examples for 3-Port Non-Distribution Valves*

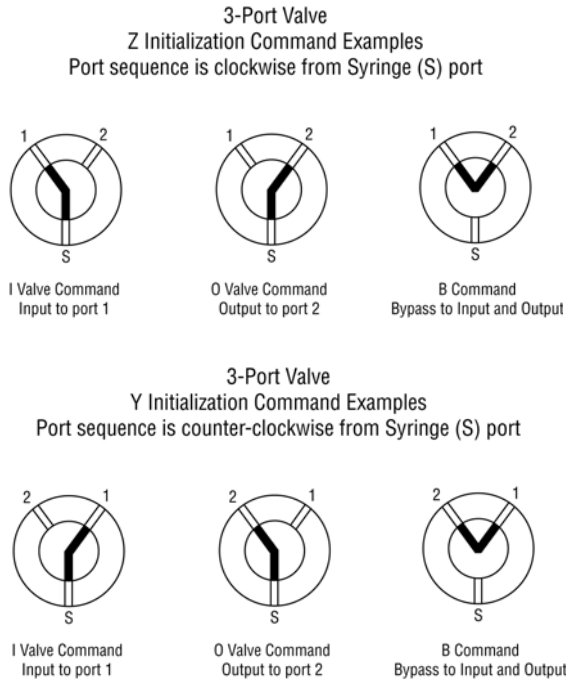

With ***distribution valves***, the direction in which the valve moves is determined by the valve command. It does not necessarily follow the shortest path.

- The [I] command moves the valve in a clockwise direction.
- The [O] command moves the valve in a counterclockwise direction.

Note: *Use of [I] and [O] in distribution valves is by convention, and does not pertain to input or output characteristics.*

Because the syringe port is always a common port with distribution valves, the [B] (Bypass) and [E] (Extra) commands have no particular bypass or “extra” function. However, the commands are supported and move to the specified port by the shortest path.

For example, in Figure 3-5, if the 3-port distribution valve has been initialized with the [Y] command, the ports are numbered as shown in the bottom diagram (counterclockwise). Issuing an [O3R] command aligns the syringe port with port 3, as shown.

Figure 3-4 shows an accurate rendering of the 3-port distribution valve. Figure 3-5 shows a simplified drawing to illustrate the valve positions.

Figure 3-4 *3-Port Distribution Valve*

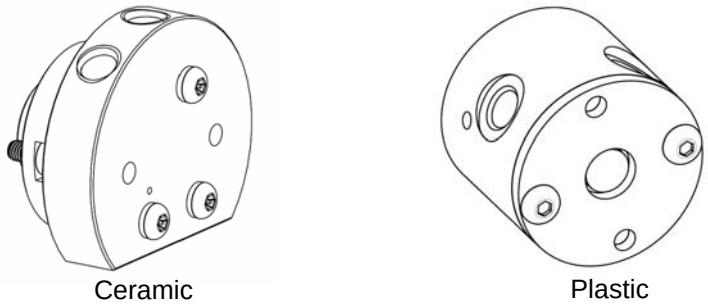

Figure 3-5 *Valve Position Examples for 3-Port Distribution Valves*

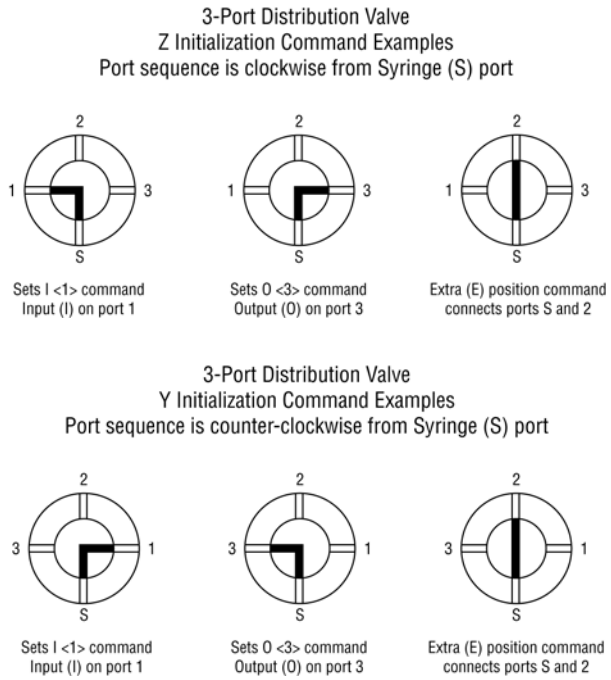

Following are more detailed descriptions of the various valve commands and what they do.

I *Move Valve to Input Position (Non-distribution Valves)*

The [I] command moves the valve to the input port set by the initialization command, following the shortest path.

I<n> ***Move Valve Clockwise to Port n (Distribution Valves)***

The [I<n>] command sets the valve position to port [n], moving in a *clockwise* direction. This command is independent of input or output characteristics.

O ***Move Valve to Output Position (Non-distribution Valves)***

The [O] command moves the valve to the output port set by the initialization command, following the shortest path.

O<n> ***Move Valve Counterclockwise to Port n (Distribution Valves)***

The [O<n>] command sets the valve position to port [n], moving in a *counter-clockwise* direction. This command is independent of input or output characteristics.

B ***Move Valve to Bypass (Non-distribution Valves)***

The [B] command connects the input and output positions, bypassing the syringe. The valve moves following the shortest path.

E ***Move Valve to Extra Position (4-Port Non-distribution Valve)***

The [E] command connects the extra position in the 4-port valve, bypassing the syringe. The valve moves following the shortest path.

Note: *The [B] and [E] commands are useful when flushing fluid lines for non-distribution valves. If a Valve command is issued to a valveless pump, the command is ignored.*

Caution! *When the valve is in the Bypass position without an open path to the syringe port, plunger moves are not allowed. Sending a plunger movement command causes an error 11 (plunger move not allowed).*

Figure 3-6 shows an accurate rendering of the 4-port non-distribution valve. Figure 3-7 shows simplified drawings to illustrate the valve positions.

Figure 3-6 *4-Port Non-Distribution valve*

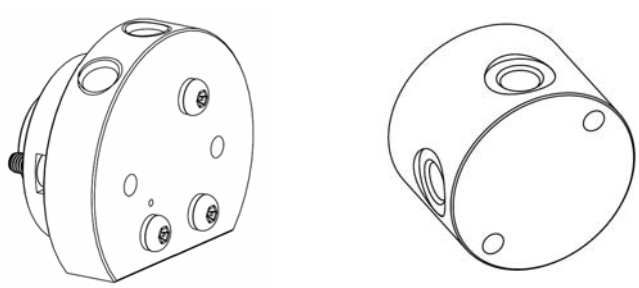

Ceramic Plastic

Figure 3-7 *Valve Position Examples for 4-Port Non-Distribution Valves*

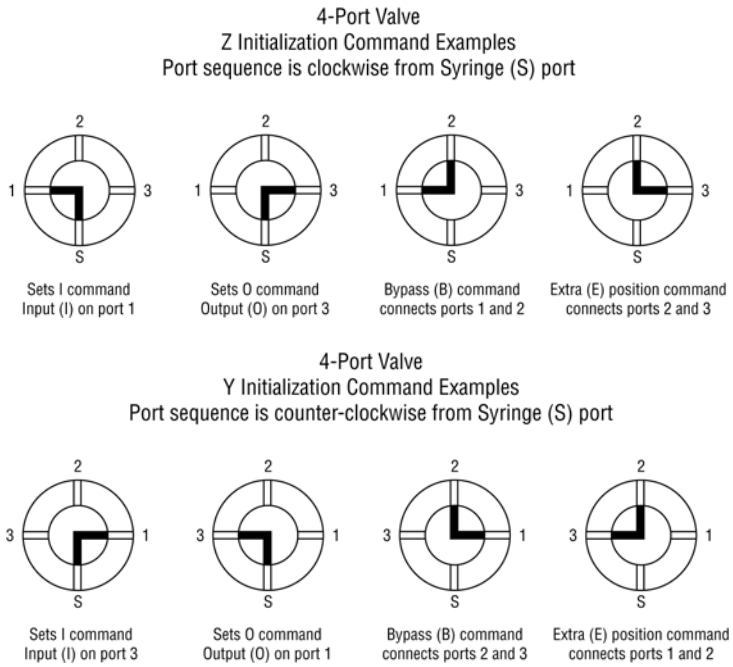

Figure 3-8 shows an accurate rendering of the 4-port dual-loop valve. Figure 3-9 shows simplified drawings to illustrate the valve positions.

Figure 3-8 *4-Port Dual-Loop Valve*

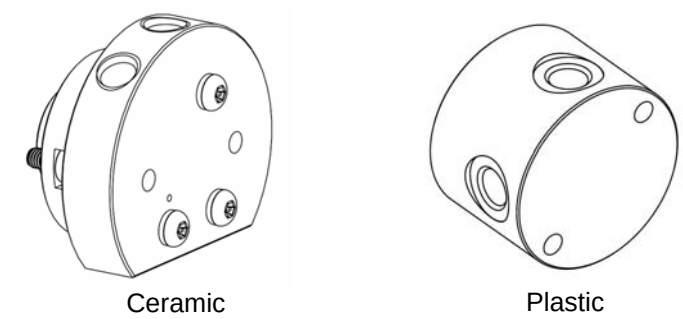

Figure 3-9 *Valve Position Examples for 4-Port Dual-Loop Valves*

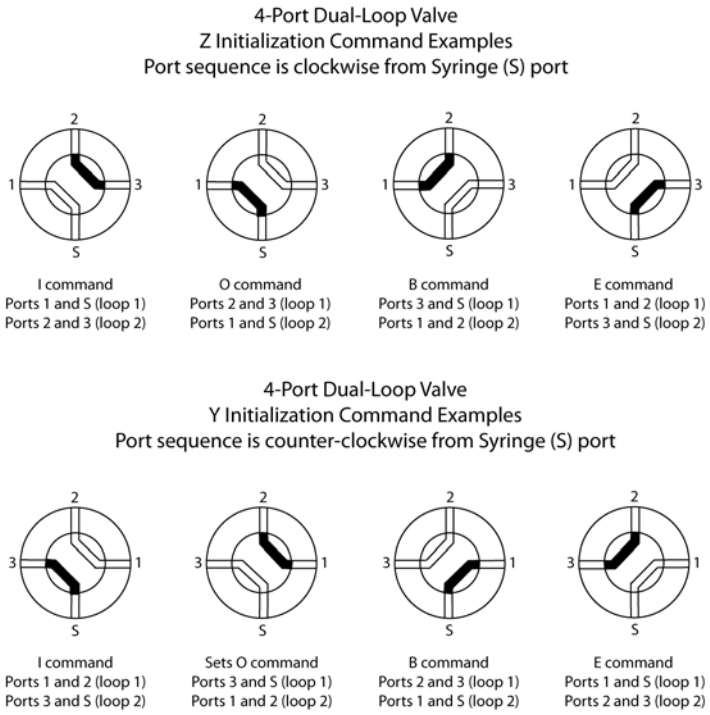

Figure 3-10 shows an accurate rendering of the 6-port distribution valve (left) and 6-port distribution valve with chamfer (right). Figure 3-11 shows simplified drawings to illustrate the valve positions.

Figure 3-10 *6-Port Distribution Valve (left) and 6-Port Distribution Valve with Chamfer (right)*

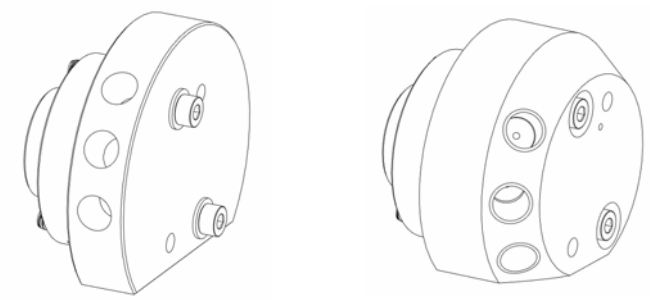

Figure 3-11 *Valve Position Examples for 6-Port Distribution Valves*

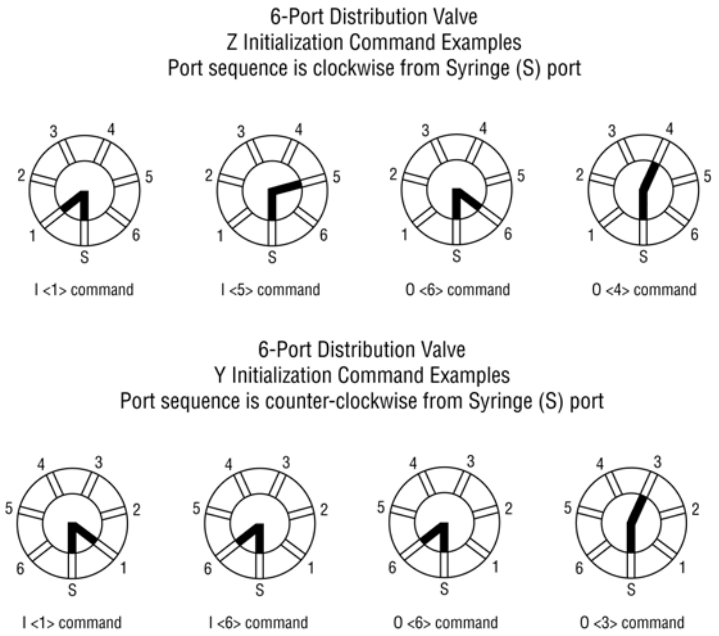

Figure 3-12 shows an accurate rendering of the 9-port distribution valve. Figure 3-13 shows simplified drawings to illustrate the valve positions.

Figure 3-12 *9-Port Distribution Valve*

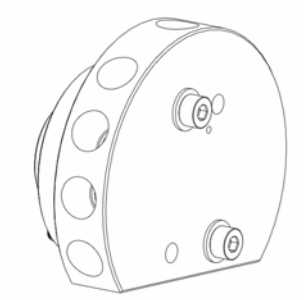

Figure 3-13 *Valve Position Examples for 9-Port Distribution Valves*

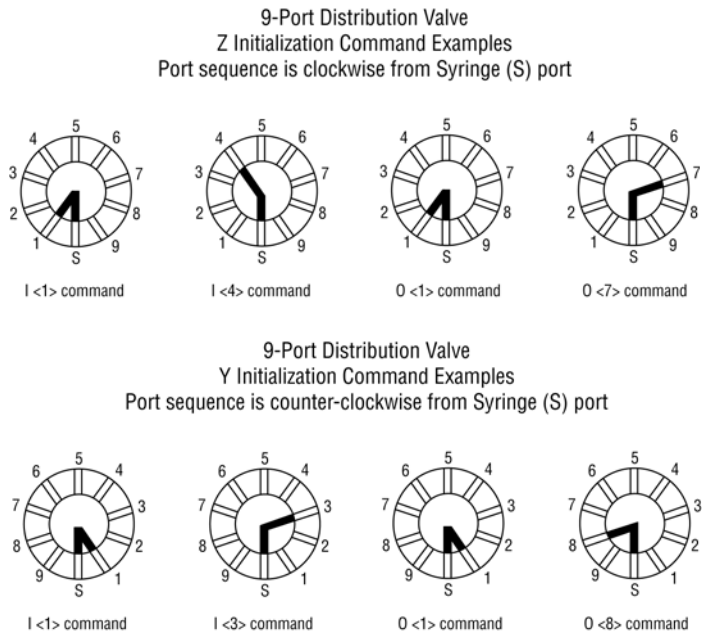

Figure 3-14 shows an accurate rendering of the 12-port distribution valve (with [Z] initialization), with visible ports numbered for reference. Figure 3-15 shows simplified drawings to illustrate the valve positions.

Figure 3-14 *12-Port Distribution Valve (with Z initialization)*

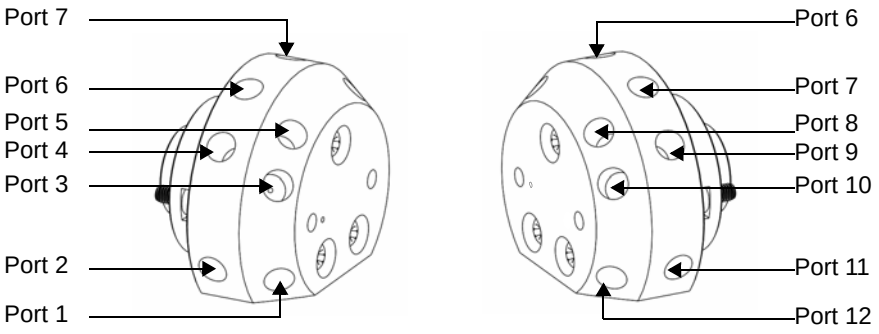

Figure 3-15 *12-Port Distribution Valve*

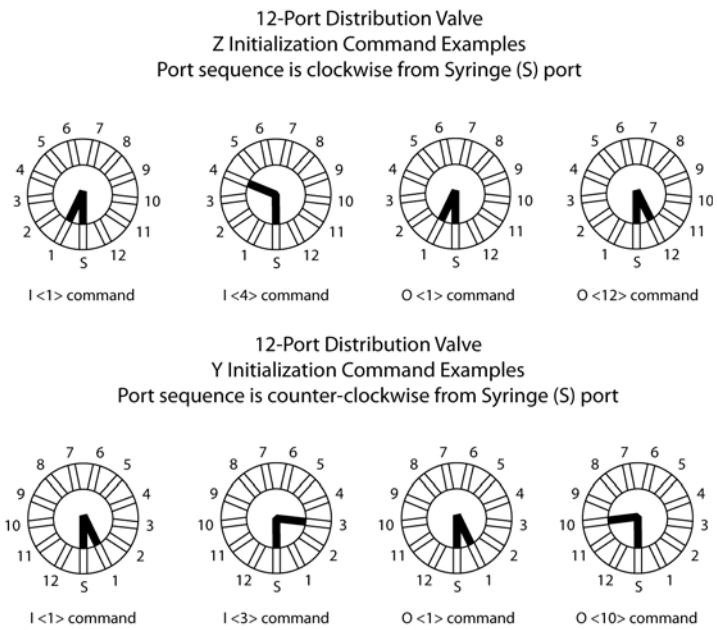

3.5.2 Plunger Movement Commands

Plunger move commands require an execute command [R]. Plunger move commands may be embedded within a command string. Plunger move commands may not be executed when the valve is in the bypass position.

The usable travel for the plunger is 30 mm, which corresponds to 181,490 increments. The total maximum plunger **Range** (default) is 184,000 increments.

When plunger moves are issued in microliters, the number of increments to move is calculated based on the configured syringe volume (**SyringeVol**). The syringe volume can be configured using the [U9x] command and can be queried using [?17] command.

$$\text{programmed increments} = \frac{\text{desired volume}}{\text{syringe volume}} * 181{,}490 = \text{total increments}$$

For example, for a volume of 250 µL with a 1.25 mL syringe:

$$\frac{250\ \mu L}{1250\ \mu L} * 181{,}490 = 36{,}298 \text{ total increments}$$

Note: *The available programmable range for plunger moves allows a small number of extra steps beyond full stroke (181,490 increments) for air gaps or other liquid handling uses. Pump performance is characterized up to 181,490 increments.*

A<n_1>, <n_2> Absolute Position

The [A] command moves the plunger to the absolute position <n_1>, specified in either increments or microliters. The device responds with a BUSY status when queried during a plunger move.

Parameter <n_2>	Parameter <n_1>	Default <n_1>	Description
0 (default)	0 - **Range**	0	Absolute position in increments
1	0.000 - **SyringeVol**	0	Absolute position in microliters. Up to 3 decimal places are allowed.

For example:

- [A300] moves the syringe plunger to absolute position 300 (same as A300,0).
- [A300,1] moves the syringe plunger to 300µl as defined by the programmed syringe volume.
- [A12.75,1] moves the syringe plunger to absolute position 12.75µl, as defined by the programmed syringe volume.

P<n_1>, <n_2> Relative Pickup

The [P] command moves the plunger downward (aspirate/pickup) based on the specified input parameter. The new position is the previous position plus <n_1>. The [P] command returns error 3 (invalid operand) if the final plunger position is greater than the maximum range or syringe volume. The device responds with a BUSY status when queried during a plunger move.

Parameter <n_2>	Parameter <n_1>	Default <n_1>	Description
0 (default)	0 - **Range**	0	Relative position in increments
1	0.000 - **SyringeVol**	0	Relative position in microliters. Up to 3 decimal places are allowed.

For example:

- The syringe plunger is at the home position [A0]. [P300] moves the syringe down 300 increments. [P600] moves the plunger down an additional 600 increments to an absolute position of 900 increments.
- The syringe plunger is at the home position [A0]. [P300,1] moves the syringe down 300µl. [P600,1] moves the plunger down an additional 600µl to an absolute position of 900µl.

D<n_1>, <n_2> Relative Dispense

The [D] command moves the plunger upward (dispense) based on the specified input parameter. The new position is the previous position minus <n1>. The [D] command returns error 3 (invalid operand) if the final plunger position would be less than 0. The device responds with a BUSY status when queried during a plunger move.

Parameter <n_2>	Parameter <n_1>	Default <n_1>	Description
0 (default)	0 - **Range**	0	Relative position in increments
1	0.000 - **SyringeVol**	0	Relative position in microliters. Up to 3 decimal places are allowed.

For example:

- The syringe plunger is at position 3000. [D300] moves the plunger up 300 increments to an absolute position of 2700 increments.
- The syringe plunger is at position 1000µl. [D300,1] moves the syringe plunger up 300µl to an absolute position of 700µl. [P700,1] moves the plunger up an additional 700µl to the position of 0µl.

3.5.3 Set Commands

Set commands require an execute command [R] and may be embedded within a command string. Set commands are used to control various settings, including the speed of the plunger. Plunger movement is divided into three phases:

- **Ramping Up.** Plunger movement begins with the start speed and accelerates with the programmed ramp-up slope to the constant or top speed.
- **Constant or Top Speed**. The plunger moves at the constant or top speed. Plunger speed can be programmed in increments/s or µL/s [V] or in preprogrammed Set Speeds [S]. The actual time the plunger travels is dependent on the ramping up and down. If the plunger move is short, it may never reach top speed.
- **Ramping Down.** The plunger will decelerate based on the programmed ramp-down slope. To enhance fluid break-off, the cutoff speed command [c] can be used to define the end speed of the plunger just before it stops.

Note: *Start speed, top speed, and cutoff speed can be controlled using volume or increment based commands (µL/s or increments/s, respectively).*

L<n_1>, <n_2> Set Slope

During the beginning and end of a move, the plunger speed ramps up and down using the Slope command:

Parameter	Value	Default	Description
<n_1>	1...40	8	Select plunger drive ramp-up slope. Slope = <n_1> * 160,000 [Inc/Sec^2]
<n_2>	1...40	8	Plunger drive ramp-down slope. Slope = <n_2> * 160,000 [Inc/Sec^2]

Note: *Not all programmable slope values are suitable for all syringe sizes and applications. Users must determine the appropriate settings for their applications.(See Section 4.2, Optimizing Centris Pump Performance.)*

v<n_1>, <n_2> Set Start Speed

Set the plunger drive top speed in Inc/sec or µL/sec.

Note: *If the speed is specified in µL/sec (n_2 = 1):*

a) The equivalent speed in Inc/Sec is calculated based on the configured syringe volume and rounded to 1 decimal place. This is set as the new start speed.

b) If no <n_1> parameter is specified, the start speed is set to default speed in Inc/Sec.

Parameter <n_2>	Parameter <n_1>	Default <n_1>	Description
0 (default)	800..32000	1600	Set start speed in increments per second.
1	If SyringeVol = 50 µl, 0.221…8.816 If SyringeVol = 100 µl, 0.441…17.632 If SyringeVol = 250 µl, 1.102…44.080 If SyringeVol = 500 µl, 2.203…88.160 If SyringeVol = 1000 µl, 4.405…176.320 If SyringeVol = 1250 µl, 5.507…220.400 If SyringeVol = 2500 µl, 11.013…440.801 If SyringeVol = 5000 µl, 22.025…881.603 If SyringeVol = 12500 µl, 55.062…2204.009	N/A See note b above	Set start speed in microliters per second. Up to three decimal places are allowed.

V<n_1>, <n_2> Set Top Speed

Set the plunger drive top speed in Inc/Sec or µl/sec. This command may be sent while a command string is already executing (On-The-Fly Speed Change).

Note: *If the speed is specified in µl/sec (n_2 = 1):*

a) The equivalent speed in Inc/Sec is calculated based on the configured syringe volume and rounded to 1 decimal place. This is set to the new top speed.

b) If no <n_1> parameter is specified, the start speed is set to default speed in Inc/Sec.

Parameter <n_2>	**Parameter <n_1>**	**Default <n_1>**	**Description**
0 (default)	1.0…200,000.0	80000.0	Set top speed in increments per second. Up to one decimal place is allowed.
1	If SyringeVol = 50 µl, 0.001…55.099 If SyringeVol = 100 µl, 0.001…110.198 If SyringeVol = 250 µl, 0.002…275.497 If SyringeVol = 500 µl, 0.003…550.994 If SyringeVol = 1000 µl, 0.006…1101.989 If SyringeVol = 1250 µl, 0.007…1377.486 If SyringeVol = 2500 µl, 0.014…2754.973 If SyringeVol = 5000 µl, 0.027…5509.946 If SyringeVol = 12500 µl, 0.066…13774.867	N/A See note b above	Set top speed in microliters per second. Up to three decimal places are allowed.

Note: *The above table shows programmable top speeds. Not all programmable speeds are possible or suitable for all applications, especially for syringe volumes > 1 mL. Users must determine the appropriate speeds for their applications. (See Section 4.2, Optimizing Centris Pump Performance.) In Tecan testing using a representative tubing configuration to aspirate and dispense, the maximum top speed before plunger overload was >1000µl/sec.*

Changing Speed on the Fly

Speed changes can be made while the syringe plunger is moving using the [V] command. This is called “changing speed on the fly.” When changing speed on the fly in CAN, use frame type 0.

Note: *If the Set speed is changed on the fly during plunger move, the following restrictions apply:*

1. If current speed and new speed are both above 800 Inc/sec, the device ramps up or down to the new speed according to the current ramp-up and ramp-down slope settings.
2. On-The-Fly speed changes are allowed only if the current and new speed values are within one of the following speed ranges:
    - 1.0 - 50,000.0 Inc/Sec
    - 50,000.1 - 100,000,.0 Inc/Sec
    - 100,000.1 - 200,000.0 Inc/Sec
3. The top speed set on the fly is retained after the move is completed. That speed is used for all subsequent moves until a new value is specified using the [V] or [S] commands.

c<n_1>, <n_2> Set Cutoff Speed

Set the plunger drive cutoff speed in Inc/Sec or µl/second.

Note: *If the speed is specified in µl/sec (n_2 = 1):*

a) The equivalent speed in Inc/Sec is calculated based on the configured syringe volume and rounded to 1 decimal place. This is set as the new cutoff speed.

b) If no <n_1> parameter is specified, the cutoff speed is set to default speed in Inc/Sec.

Parameter <n_2>	Parameter <n_1>	Default <n_1>	Description
0 (default)	800..64000	1600	Set cutoff speed in increments per second.
1	If SyringeVol = 50 µl, 0.221…17.631 If SyringeVol = 100 µl, 0.441…35.263 If SyringeVol = 250 µl, 1.102…88.159 If SyringeVol = 500 µl, 2.203…176.319 If SyringeVol = 1000 µl, 4.405…352.638 If SyringeVol = 1250 µl, 5.507…440.798 If SyringeVol = 2500 µl, 11.013…881.597 If SyringeVol = 5000 µl, 22.025…1763.194 If SyringeVol = 12500 µl, 55.062…4407.987	N/A See note b above	Set cutoff speed in microliters per second. Up to three decimal places are allowed.

S<n> ***Set Speed***

Set the plunger drive set speed. All speed values are set in increments per second.

Note: *These speed settings do not cover the full range of speeds the plunger can travel. They are commonly used speeds provided for the convenience of the user. All times are approximate and are based on default values for slope, start, and cutoff speeds. These times will vary with different ramping, start, and cutoff speeds. For information on determining timing for specific applications, see Appendix B, "Plunger Information."*

Parameter	Validity	Default	Description
<n>	0-50	7	Select speed code from the speed code table.

Table 3-6 *Speed Codes*

Speed Code (S)	Top Speed (V) (increments/s)	Approx. Seconds/ Stroke
0	200000	1.06
1	180000	1.15
2	160000	1.26
3	140000	1.40
4	120000	1.60
5	100000	1.89
6	90000	2.09
7	80000	2.33
8	70000	2.65
9	60000	3.07
10	50000	3.67
11	40000	4.57
12	30000	6.07
13	20000	9.09
14	10000	1816
15	9000	20.17
16	8000	22.69
17	7000	25.93
18	6000	30.25
19	5000	36.30
20	4000	45.37
21	3000	60.50
22	2000	90.75
23	1000	181.50
24	900	201.70
25	800	226.90

Speed Code (S)	Top Speed (V) (increments/s)	Approx. Seconds/ Stroke
26	700	259
27	600	302
28	500	363
29	400	454
30	300	605
31	200	907
32	100	1815
33	90	2017
34	80	2269
35	70	2593
36	60	3025
37	50	3630
38	40	4537
39	30	6050
40	20	9075
41	10	18149
42	9	20166
43	8	22686
44	7	25927
45	6	30248
46	5	36298
47	4	45373
48	3	60497
49	2	90745
50	1	181490

K<n> *Set Backlash Compensation Increments*

The [K] command sets the number of backlash increments and adds backlash compensation on aspiration. This command can be used to adjust aspirate and dispense volumes, especially for multi-dispense applications.

K Parameter	Value of <n>	Description
<n>	0–4000	Sets number of backlash increments Default values: ◆ 0 (Centris with ceramic syringe) ◆ 2000 (Centris with glass syringe*) ◆ 2300 (Centris with ceramic syringe and wash option) * Note: for operation with large glass syringes (e.g. 5 mL and 12.5 mL), it is recommended to set backlash compensation at K4000 for optimum liquid handling performance.

Note: *To maintain optimum liquid handling performance over the specified life of the product, backlash compensation is required. This command is useful to eliminate any mechanical backlash that may increase over the life of the pump.*

k<n> **Set Initialization Gap Increments**

The [k] command sets the plunger drive offset from the hard stop position reached during initialization.

<n> = 0–4000 (1600 is the default)

Caution! *Changing this setting to a value at or near 0 can increase the wear to syringe components and increase the chance of a plunger overload error.*

J<n> *Set Auxiliary Outputs*

The [J] command sets the TTL output lines. This command can be used by customers for communication between the pump and other devices or between pumps.

The syntax for this command is:

[J<n>]

where <n> = 0–7 (0 is the default).

In the following table of values, clear = low, 0V and set = high, 5V.

n	Output #1	Output #2	Output #3
0	clear	clear	clear
1	set	clear	clear
2	clear	set	clear
3	set	set	clear
4	clear	clear	set
5	set	clear	set
6	clear	set	set
7	set	set	set

><n$_1$>, <n$_2$> Set User Data and User Data Location

The [>] command loads a byte of user data into non-volatile memory.

The syntax for this command is:

[><n$_1$>, <n$_2$>]

where <n$_1$> = 0-15 (0 is the default location in non-volatile memory)

and <n$_2$> = 0-255 (0 is the default data to load into non-volatile memory).

3.5.4 Interaction of Speed Commands

The Start Speed [v], Top Speed [V], and Cutoff Speed [c] commands interact according to the following rules:

[v] < [V]

[c] < [V]

1 The Start Speed should always be less than or equal to the Top Speed. If the Start Speed [v] is greater than the Top Speed, the Start Speed will be set equal to the Top Speed.

2 The Cutoff Speed [c] should always be less than or equal to the Top Speed [V]. If Cutoff Speed is greater than Top Speed, the Cutoff Speed will be set equal to the Top Speed.

Note: *The above modification to Start and Cutoff speed is temporary. The device will report the user programmed value when queried.*

3.5.5 Control Commands

R ***Execute Command or Program String***

The [R] command tells the pump to execute a new or previously loaded but unexecuted command string. This command also causes the resumption of a halted [H] command string.

Commands containing [R] at the end of the string executes immediately. If the command or program string is sent without the [R], it is placed in the command buffer.

Sending the [R] alone executes the last unexecuted command in the buffer. Sending another [R] does not repeat the program string (i.e., the string has been executed).

Note: *The [R] command (frame type 1) is valid in CAN communication. An equivalent command is ASCII 1 for frame type 2.*

X ***Execute the Last Command or Program String***

The [X] command repeats the last executed command or program string.

Note: *The [X] command (frame type 1) is valid in CAN communication. An equivalent command is ASCII 3 for frame type 2.*

G<n> ***Repeat Command Sequence***

This command repeats a command or program string the specified number of times. If a GR or a G0R is sent, the sequence is repeated until a Terminate command [T] is issued. The G command can be used to nest up to 20 loops and can be repeated up to 30,000 times.

The syntax for this command is:

[G<n>]

where <n> = 0-30000

For example, [A3000A0G10R] moves the syringe plunger to position 3000 then back to position 0. This sequence is repeated 10 times.

g ***Mark the Start of a Repeat Sequence***

The [g] command is used in conjunction with the [G] command. The [g] command marks the beginning of a repeat sequence (loop) that occurs within a program string (i.e., the entire string is not repeated). Both the [g] and [G] commands can be used to nest up to 20 loops.

Table 3-7, Example Program String shows the various segments of the command string [A0gP50gP100D100G10G5R].

Table 3-7 *Example Program String*

Command Segment	Description
A0	Move plunger to position 0.
g	Outer loop start.
P50	Move plunger down 50 increments.
g	Inner loop start.
P100	Move plunger down 100 increments.
D100	Move plunger up 100 increments.
G10	Inner loop, repeat 10 times.
G5	Outer loop, repeat five times.
R	Execute command string.

M<n> ***Delay Command Execution***

The [M] command delays execution of a command in milliseconds to the closest multiple of ten. This command is typically used to allow time for liquid in the syringe and tubing to stop oscillating, thereby enhancing precision. The syntax for this command is:

[M<n>]

where <n> = 10–30,000 milliseconds (default 10)

When a delay is active, device will report BUSY. When device is active, issuing:

- [R] command terminates the delay and executes the remaining command(s) (if any) immediately.
- [T] command terminates the delay and command execution is halted. Subsequent [R] command will execute the remaining command(s) (if any) immediately.
- [X] command returns error 14 with device status as BUSY.

Sending a new command string when a delay in previous string is active will cause the new string to execute.

H<*n_1*>, <*n_2*> Halt Command Execution

Used with a program string to halt execution of the string. When halted, device will report READY. When in halted state, issuing a:

- [R] command or transitioning the digital input (based on value of <n_1>) will execute the remaining commands in the string (if any).
- [T] command will terminate the command execution.
- [X] command will cause command string to execute from the beginning.

Parameter	Validity	Default	Description
<n_1>	0	0	Waits for [R] or for either digital input to transition based on <n_2>.
	1		Waits for [R] or for digital input #1 to transition based on <n_2>.
	2		Waits for [R] or for digital input #2 to transition based on <n_2>.
	3		Waits only for [R] command.
<n_2>	0	0	Active Low - Transition from HIGH to LOW (5 →0 Volts).
	1		Active High - Transition from LOW to HIGH (0 →5 Volts).

Note: *Sending a new program string while a previous program string is halted causes the new program string to execute.*

The status of the TTL input lines can also be read using [?30] and [?31]. These commands are described in “Report Commands” later in this chapter.

The TTL inputs signals are de-bounced with a 20 milliseconds filter to prevent electrical noise from triggering a false transition.

T ***Terminate Command***

Gracefully terminates plunger moves in progress [A], [P], [D], initialization commands [Z], [Y] and [W], and delays [M]. Any other individual command will run to completion before the termination takes place. Terminates both single commands and command strings.

If [T] command is issued when a delay is in progress due to [M] command, the delay is terminated and command string is put in “Halt” state. Commands after delay command [M] can be resumed using a [R] command.

Sending an execute last command [X] after a terminate command will cause the program string to execute from the beginning.

Note: Issuing [T] command when the plunger is in movement will cause the plunger to ramp down to the cutoff speed before it stops, but with a high ramp-down rate. This is done to terminated plunger movement without any step loss.

Note: *The [T] command does not terminate valve move commands.*

Note: *The [T] command (frame type 0) is valid in CAN communication. An equivalent command is ASCII 4 for frame type 2.*

! ***Reset Command***

The reset command performs a software reset, restarting the application firmware after an orderly shutdown. This command may not be embedded within a command string. This command requires an [R] to execute.

F ***Execute Command on the Fly***

The [F] command is similar to the [R] command and tells the pump to execute the command immediately without affecting the currently loaded command string. The commands that can be issued with the [F] command are [S], [V], [v], [c], [L], [K], [k], [J], and [>]. Only one command can be issued at a time with [F].

For commands that affect plunger moves followed by the [F] command, only the [V] command takes effect immediately, even if the plunger movement is active. All others take effect with subsequent plunger moves.

C ***Clear Command Buffer***

The [C] command clears the currently loaded command string. In CAN, this command is equivalent to sending ASCII 2 with frame type 2.

b<n> ***Set CAN heartbeat message periodicity (CAN communication only)***

The [b] command sets the repeat interval for the heartbeat message. This is valid only when the pump is using the CAN communication interface and the heartbeat message is enabled by the [U60] command. The syntax for this command is:

[b<n>]

where <n> = 0-20 (0 is default)

The resolution for <n> is 0.5 seconds. For example, [b2] sets the heartbeat message periodicity to 1 second. If the period is set to 0, the heartbeat message transmission is disabled.

3.5.6 Non-Volatile Memory (EEPROM) Commands

i ***Write device data to non-volatile memory***

This command writes all device data from the working memory into the non-volatile memory. Settings for the following commands can be stored: [V], [v], [c], [L], [K], and [k].

r — *Read system and device data from non-volatile memory*

This command reads device data from either the non-volatile memory (NVRAM) or factory default flash (FRAM) settings. Data for the following commands are read: [V], [v], [c], [L], [K], and [k]. Note that restoring the factory default settings from the flash memory copies these values to the working memory and would be lost after a power cycle. To transfer these values into the non-volatile memory, an [i] command needs to be given following the [r] command.

The syntax for this command is

[r<n>]

where <n> = 0,1 (default 0).

Value of <n>	Description
0	Read system and device data from non-volatile memory
1	Read system and device data from flash memory (factory default)

s<n_1><n_2> Load Program String into Non-Volatile Memory

The non-volatile memory in the Centris pump can store a program string thus providing the user with the option of computer-free operation. The pump can be configured to run stored programs using the [U30] command. See “Pump Configuration Commands” earlier in this chapter.

The [s] command is placed at the beginning of a program string to load the string into the non-volatile memory. The syntax for this command is:

[s<n_1><n_2>]

where <n_1> = 0–15, <n_2>=command string to load

Up to 16 program strings (numbered 0 through 15) can be loaded into the non-volatile memory. Each string can use up to 128 characters. For example, [IA3000OA0R] requires 9 bytes.

Example Program String: [s8ZS1gIA3000OA0GR]

Command Segment	Description
s8	Loads string into program 8 of non-volatile memory (Address switch position 8)
Z	Initializes pump
S1	Sets plunger speed
g	Marks start of loop
I	Turns valve to input position
A3000	Moves plunger to position 3000
O	Turns valve to output position
A0	Moves plunger to position 0
G	Endlessly repeats loop
R	Executes command string

e<n> ***Execute Non-Volatile Memory Program String***

Non-volatile memory command strings are executed by sending an [e] command. The executing program string can be terminated using the [T] command.

[e<n>]

where <n> = 0–15 (the string number)

Note: *An Initialization command should always be included in the non-volatile memory command string if the pump is used in standalone mode.*

U30 ***Set Run from Non-Volatile Memory Auto Mode***

The [U30] command sets the “Run from Non-Volatile Memory Auto Mode” flag in the non-volatile memory and begins operating the pump in stand alone mode. The pump runs one of 16 command strings <n> as selected by the address switch,

where <n> = 0–F

U31 ***Clear Run From Non-Volatile Memory***

The [U31] command clears the “Run from Non-Volatile Memory Auto Mode” flag in the EEPROM and begins operating in the default mode.

Linking Program Strings in Non-Volatile Memory

Non-volatile memory program strings can be linked by ending one program string with an [e] command that refers to a second program string.

Example Program Strings:

[slZgIA3000OA0G5e2R]

[s2gIA3000OgHD300G10GR]

The first string loads an initialization and prime sequence into program 1 of the non-volatile memory (address switch position 1). It then links to string 2 in the non-volatile memory.

The second string loads an aspirate and dispense sequence into program 2 of the non-volatile memory. The second non-volatile memory program string fills the syringe, then performs 10 dispenses of 300 increments each. The dispenses are triggered by an [R] command. This string is repeated endlessly until the pump is powered down.

In this example, if the Centris is set to run from non-volatile memory via the U30 command and set to address 1, upon power-up the pump automatically initializes, primes, and performs the multiple dispenses until it is again powered down or sent a T terminate command.

3.5.7 Report Commands

Report commands do not require an [R] command.

Note: *In CAN communication, frame type 6 is used to retrieve information from the pump. For more information, see Appendix F, "Command Quick Reference".*

Q ***Query Status and Error Bytes***

The [Q] command reports the pump status and error code.

The syntax for this command is:

[Q<n>]

where n = 0–3 (0 is the default).

Command	Description
Q or Q0	Returns pump status and error code. This is the standard command for device status polling. See Section 3.6.1, Status Byte for more information.
Q1	Returns plunger status and error code. See Section 3.6.5, Extended Error Codes for more information.
Q2	Returns valve status and error code. See Section 3.6.5, Extended Error Codes for more information.
Q3	Returns other device status and error code. See Section 3.6.5, Extended Error Codes for more information.

&<n> ***Report Firmware Revision and Version (invalid in CAN communication)***

The [&] command reports the firmware part number and revision (n = 0) and version (n = 1).

: ***Report Error Log***

The [:] command reports an error log. The last 100 errors are stored in NVRAM and can be indexed by <n>, where <n> = 1–100.

= ***Report Last Command Character***

The [=] command reports the last command character. The last 1000 received command characters are stored in NVRAM and can be indexed by <n>, where <n> = 1–1000.

< <n> ***Report user data stored in location <n>***

The [<] command reports the user data stored by the [>] command in the location specified by <n>, where <n> = 0–15.

Table 3-8 *Report Commands*

Command	Description
? or ?0	Reports the absolute position of the plunger in increments. This is the absolute position from the hard stop and including the initialization gap increments.
?1	Reports the current plunger position in increments. This is the plunger set by a previous [A], [P], or [D] command
?2	Reports the plunger encoder position in mm (approximate using linear encoder.)
?3	Reports the plunger initialization gap steps in increments
?4	Reports the number of backlash steps in increments

Command	Description
?6	Reports the start speed in increments per second
?7	Reports the top speed in increments per second
?8	Reports the cutoff speed in increments per second
?9	Reports the plunger drive ramp-up slope code setting
?10	Reports the plunger drive ramp-down slope code setting
?16	Reports the plunger maximum range in increments
?17	Report the syringe volume in micro-liters.
?18	Report the plunger absolute position in microliters
?20	Reports valve position ([i], [o], [b] or [e]) or (“1” – <n>)
?23	Reports the firmware part number and revision string. same as [&0].
?29	Reports the pump status (1 = busy or 0 = ready). This command is similar to the [Q0] command, but appends the status to the pump response to enable status queries in CAN communication. The error code returned with this command is the last registered error code.
?30	Reports status of digital input #1 (0 = 0Volts, 1 = 5Volts).
?31	Reports status of digital input #2 (0 = 0Volts, 1 = 5Volts).
?36	Report start speed in micro-liters per second
?37	Report top speed in micro-liters per second
?38	Report cutoff speed in micro-liters per second
?40	Reports total operating time in minutes
?41	Reports number of device power-ups
?42	Reports the total number of pump initializations [Z], [Y], [W] (absolute)
?43	Reports the total number of pump initializations since last device power up or reset. [Z], [Y], [W]
?44	Reports the total distance of plunger movement in meters (calculated)
?45	Reports the total number of plunger movements (absolute). Initialization moves are not included.
?46	Reports the total number of plunger movements since the last device power up or reset. Initialization moves are not included.
?47	Reports the total number of valve movements (absolute). Initialization moves are not included.
?48	Reports the total number of valve movements since the last device power up or reset. Initialization moves are not included.

Command	Description
?50	Reports the current power supply voltage in volts
?51	Reports the highest recorded power supply voltage in volts
?52	Reports the lowest recorded power supply voltage in volts
?53	Reports the real-time pump temperature in °F
?54	Reports the highest recorded temperature in °F
?55	Reports the lowest recorded temperature in °F
?60	Reports the number of firmware downloads
?61	Reports the application firmware compilation time. Format: hh:mm:ss
?62	Reports the application firmware compilation date. Format: mmm-dd-yyyy
?63	Reports the actual downloaded firmware version string. Format: ‘CENTRIS-Vx.yyy-MM/YYYY’. Same as [&1].
?64	Reports the boot firmware part number and revision string. Format:’xxxxxxxx Rev xx’
?65	Reports the checksum of the application firmware
?67	Reports the command buffer status (0 = Buffer empty, 1 = Buffer not empty).
?76	Reports the pump configuration in ASCII text (see below)
?80..95	Reports the command string in FRAM loaded via [s] command ?80 returns s0...?95 returns s15.
?96	Reports the self-test command string
?99	Reports the currently loaded command string

Table 3-9 *?76 Configuration Report Command Response Format*

Field #	Category	ASCII Text	Description
?76 response format = ‘field1|field2|field3|field4’ Each field is separated by a ‘|’ character.			
1	Valve type	‘3 WAY’	3-way valve (Y type)
		‘4 WAY’	4-way valve
		‘3+PL’	3-port distribution valve (90-Degrees)
		‘6+’	6-port distribution valve
		‘9+’	9-port distribution valve
		‘12+’	12-port distribution valve
		‘DUAL’	Dual-loop valve
2	Serial baud rate	‘9600’	9600 baud
		‘38400’	38400 baud
3	CAN baud rate	‘100K’	100K baud
		‘125K’	125K baud
		‘250K’	250K baud
		‘500K’	500K baud
		‘1M’	1M baud
4	Device serial protocol	‘AUTO’	Auto detect serial communication protocol
		‘OEM’	OEM serial communication protocol only
		‘DT’	DT serial communication protocol only
5	Syringe Volume	‘50uL’	Syringe volume - 50µL
		‘100uL’	Syringe volume - 100µL
		‘250uL’	Syringe volume - 250µL
		‘500uL’	Syringe volume - 500µL
		‘1000uL’	Syringe volume - 1000µL
		‘1250uL’	Syringe volume - 1250µL
		‘2500uL’	Syringe volume - 2500µL
		‘5000uL’	Syringe volume - 5000µL
		‘12500uL’	Syringe volume - 12500µL

3.5.8 Diagnostics Commands

d ***Perform device diagnostics***

The [d] command performs device diagnostics and returns the result. The syntax for this command is:

[d<n>]

where <n> = 0–2 (no default).

<n>	Description
0	Plunger force test. Reports the minimum current required in milliamps, for the plunger motor to move without step-loss.
1	Valve force test. Reports the minimum current required in milliamps, for the valve motor to move without step-loss.
2	Priming confirmation. Reports the number of increments moved after moving the valve to a non-port position. The device needs to be initialized before performing this test.

Note: *After running any of the above diagnostic tests, the device must be initialized before continuing normal operation.*

@<n> ***Clear Diagnostics log***

The [@] command clears the diagnostics log data based on the parameter. The pump stores the diagnostics data for use by qualified service personnel for advanced troubleshooting. The data should not be deleted unless a reset is desired after a service activity by trained personnel. The syntax for this command is:

[@<n>]

where <n> = 0–2 (0 is default).

<n>	Description
0	Clears the Min/Max voltage.
1	Clears the Min/Max temperature.
2	Clears all device counters. This includes: a. No. of device initializations b. No. of plunger movements c. No. of valve movements d. Total plunger distance moved

3.6 Error Codes and Pump Status

The error code and pump status (ready or busy) is returned in the response message for every command sent to the device when using the serial communication interface. The pump status is not available when using the CAN communication interface.

The [Q] command can be used to read the error code for the last executed command and to query pump status. The user should send a [Q] command before sending a program string or individual command to ensure that the pump has completed the previous command successfully.

3.6.1 Status Byte

The status byte has the following format:

Serial Interface:

Bit 7	Bit 6	Bit 5	Bit 4	Bit 3	Bit 2	Bit 1	Bit 0
0	1	RDY	0	ERR3	ERR2	ERR1	ERR0

RDY = 0 The device is busy and will only accept report and terminate commands.

RDY = 1 The device is ready and will accept new commands.

CAN Interface:

Bit 7	Bit 6	Bit 5	Bit 4	Bit 3	Bit 2	Bit 1	Bit 0
0	0	1	0	ERR3	ERR2	ERR1	ERR0

Note: *The device status bit is available only in the serial communication interface. To obtain the device status in CAN, use the [?29] command.*

The last four bits represent the error code. In serial communication, commands addressed to multiple pumps at once cannot be used to obtain pump status; pumps must be queried separately.

Note: *In serial communication, the answer block for all commands contains a status bit and can be used to determine pump status (busy or ready). In CAN communication, the pump responds with an answer message and error code upon completion of the currently loaded command or command string.*

3.6.2 Error Codes

Error codes describe problem conditions that may be detected in the device (excluding error code 0). Error codes are returned in the least significant four bits of the status byte. If an error occurs, the pump stops executing commands, clears the command buffer, and returns the status byte with the appropriate error code.

Some errors continue to appear, such as plunger overloads, until they are cleared by the initialization command. On a plunger overload, the device will not execute another syringe move command until the device is reinitialized.

Table 3-10 *Error Codes*

Error Code	Error Type	Description
0	-	Error Free Condition.
1	Type 2	Initialization Error. This error occurs when the pump fails to initialize. Check for blockages and loose connections before attempting to reinitialize. The pump will not accept commands until it has been successfully initialized. This error can only be cleared by successfully initializing the pump.
2	Type 1	Invalid Command. This error occurs when an unrecognized command is issued. Correct the command and operation will continue normally.
3	Type 1	Invalid Operand. This error occurs when an invalid parameter <n> is given with a command. Correct the parameter and pump operation will continue normally.
7	Type 2	Device Not Initialized. This error occurs when the pump is not initialized. To clear the error, initialize the pump.
8	Type 1	Valve Configuration Invalid. This error occurs if the valve is configured to “NONE” and [Z], [Y], [I], [O], [B], or [E] commands are sent or valve does not support the [B] or [E] positions. Set the correct valve configuration.
9	Type 3	Plunger Overload. This error occurs when movement of the syringe plunger is blocked by excessive backpressure. The pump must be reinitialized before normal operation can resume.
10	Type 3	Valve Overload. This error occurs when the valve drive loses increments by blockage or excess backpressure. The pump must be reinitialized before normal operation can resume. Sending another Valve command reinitializes the valve and sets it to the correct location. Continual valve overload errors are an indication the valve should be replaced.
11	Type 1	Plunger Move Not Allowed. Plunger move commands are not allowed when the valve is in the bypass position or valve has not been initialized.

Error Code	Error Type	Description
12	Type 1	Extended Error Present. Use command [Q<n>] to read the extended error code. See section “Extended Error Codes” for details on extended errors
13	Type 1	NVMEM access failure. Unable to read or write to the NVRAM.
14	Type 4	Command buffer empty or executed (cannot use [R]) or not ready for repeat (cannot use [X]). Also, if the command buffer is empty or command strings in NVRAM are empty, issuing ?99 or ?80…?95 returns this error code.
15	Type 4	Command Buffer Overflow. This error occurs when new commands are sent to the pump before it has completed the execution of current command. Commands in the buffer must be executed before more commands can be sent.

Table 3-11 *Error Codes and ASCII and Hexadecimal Values*

Error Code	Status byte (Serial)						Description
	Hexadecimal		Decimal		ASCII		
	Ready	Busy	Ready	Busy	Ready	Busy	
0	60h	40h	96	64	’	@	No Error
1	61h	41h	97	65	a	A	Initialization Error
2	62h	42h	98	66	b	B	Invalid Command
3	63h	43h	99	67	c	C	Invalid Operand
7	67h	47h	103	71	g	G	Device Not Initialized
8	68h	48h	104	72	h	H	Invalid Valve Configuration
9	69h	49h	105	73	i	I	Plunger Overload
10	6Ah	4Ah	106	74	j	J	Valve Overload
11	6Bh	4Bh	107	75	k	K	Plunger Move Not Allowed
12	6Ch	4Ch	108	76	l	L	Extended Error Present
13	6Dh	4Dh	109	77	m	M	Nvmem Access Failure
14	6Eh	4Eh	110	78	n	N	Command Buffer Empty or Not Ready
15	6Fh	4Fh	111	79	o	O	Command Buffer Overflow

Note: *Ready/Busy status applies only for serial communication. For CAN, the first 4 significant bits are always set to 2 (0010'b).*

Caution! *All errors reported by the pump should be captured by the user software and the physical cause corrected before continuing operation. Failure to do so may result in damage to the pump or adversely affected pump performance, and void the warranty*

3.6.3 Error Types

There are four error types, which are described below.

Immediate Errors, Type 1

These errors are returned with the answer block immediately. When a valid command is sent, the pump will continue to function normally. In this case, the [Q] command is not required.

Note: *There is no need to reinitialize the pump following this error type.*

Initialization Errors, Type 2

This error is returned if the pump fails to initialize or if a plunger move command is sent without prior initialization the plunger. To ensure that the pump initializes successfully, send a [Q] command after the Initialization command.

- If the [Q] command indicates both a successful initialization and that the pump is ready, subsequent move commands can be sent.
- If the [Q] command indicates the pump has not initialized, the pump must be reinitialized until the [Q] command indicates successful initialization.
- If initialization is not successful, a "Device Not Initialized" error is returned as soon as the next move command is sent. A successful re-initialization must be executed before subsequent move commands can be sent.

Overload Errors, Type 3

These include the "Plunger Overload" and "Valve Overload" errors (errors 9 and 10). If the pump returns a plunger overload error, the pump must be reinitialized before continuing. If the pump reports a valve overload error, further plunger moves will not be allowed until the valve is successfully initialized again. The pump will automatically perform valve initialization if a valve move command is issued after the occurrence of a valve overload.

Command Buffer Error, Type 4

These include the "Command buffer empty/not ready" (Error 14) and "Command buffer overflow" (Error 15). Error 15 occurs if a move command, set command (except [V]), or valve command is sent while the pump is busy executing a previously loaded command. The pump ignores the new command and issues

Error 15. The [Q] command allows the controller to determine when the command execution is complete and the pump is ready to accept new commands.

Error 14 occurs if the command buffer is empty and an execute command [R] or repeat last command [X] is sent or a report command is used to read the loaded command string [?99] or any of the stored command string from NVRAM [?80…?95].

Note: *There is no need to reinitialize the pump following this error type.*

Report commands, Terminate command [T] (or in CAN, command type 2, data byte ASCII-4), and the Set Top Speed command [V] will not return an error 15. Report commands are considered valid commands while the pump is busy. As the pump can change speed while the plunger is moving, the [V] commands will not return a “Command Overflow” error.

3.6.4 Heartbeat message

The heartbeat message is an answer frame sent over CAN periodically based on the interval selected using the [b] command. The heartbeat message can be enabled or disabled using the [U60] or [U61] command, respectively. This function is disabled by default and is not available in the serial communication interface.

The heartbeat message consists of three or more bytes; the first two bytes are reserved for plunger and valve errors and the following characters are for general device errors. Since more than one device error can exist at the same time, the device errors are sent in multiple ASCII characters.

The error codes and description for plunger, valve, and device errors in the heartbeat message are identical to the extended error code.

3.6.5 Extended Error Codes

Extended error codes provide additional information regarding the error condition. These include additional error codes not included in the standard error codes of the status message. If the pump returns an extended error code (Error 12) in the status message, this means there is an error condition not specified in the standard error codes. The extended error code can be read using the [Q<n>] command. The extended error code includes errors specific to the plunger, valve, and general device errors.

The last 100 error codes can be read using the [:<n>] command. The response is an error string whose format is the same as the heartbeat message response, where the first two characters are reserved for plunger and valve, respectively, and the following ASCII characters correspond to general device errors.

Plunger Errors

The table below lists all extended error codes for plunger and reason for error generation. This can be read using the [Q1] command and is also the first byte in the heartbeat message response.

Table 3-12 *Plunger Error Codes*

Error Code	ASCII character	Error Message/ Description	Caused by
0	@	No plunger errors detected	Plunger initialization complete. No plunger errors detected and plunger is ready for operation
1	A	Plunger initialization error	Initialization commands [Z], [Y], or [W] failed
7	G	Plunger not yet initialized	[A], [P] or [D] issued before plunger initialization command
9	I	Plunger overload	Step loss detected for [A], [P], or [D]
11	K	Plunger move not allowed	[A], [P], or [D] issued when valve is in bypass position or valve not initialized
27	[	Plunger move terminated	Plunger move terminated due to Terminate command
33	a	No plunger steps detected	No plunger movement detected on linear encoder for [Z], [Y], [W], [A], [P,] or [D] command
34	b	Step loss detected	Step loss detected on linear encoder for [Z], [Y], [W], [A], [P], or [D] command
35	c	Plunger Home flag error	Plunger Home flag not detected during [Z], [Y], or [W] command
36	d	Plunger drive reference voltage check failure	Built-in self test- Plunger drive reference voltage check failure or incorrect
37	e	Plunger diagnostics error	Error while executing plunger diagnostics [d0]

Valve Errors

The table below lists all extended error codes for valve and reason for error generation. This can be read using the [Q2] command and is also the second byte in the heartbeat message.

Table 3-13 *Valve Error Codes*

Error Code	ASCII character	Error Message/ Description	Caused by
0	@	No valve errors detected	Valve initialization complete. No valve errors detected and valve is ready for operation
1	A	Valve initialization error	Initialization commands [Z], [Y], [w], [I], [O], [B, and [E] failed
7	G	Valve not initialized	[A], [P], [D], or [W] issued before valve initialization command
8	H	Valve not configured	Valve not configured (Type = NONE) and [Z], [Y], [I], [O], [B], or [E] received
10	J	Valve overload	Valve overload for [I], [O], [B], or [E] command
40	h	Valve move terminated	Valve move terminated due to terminate command
41	i	No valve steps detected	No valve movement detected on valve encoder for [Z], [Y,] [W], [I], [O], [B], and [E] command
42	j	Step loss detected	Step loss detected on valve encoder for [Z], [Y,] [w] [I,] [O[, [B], and [E]
43	k	Valve Index slot error	Valve index slot not detected during [Z, [Y, or w or when [I,] [O], [B], or [E] is sent without initializing valve
44	l	Valve drive reference voltage check failure	Built-in self test - Valve drive reference voltage check failure or incorrect
45	m	Valve diagnostics error	Error while executing valve diagnostics

Device Errors

The table below lists all general extended error codes for the pump and reason for error generation. This can be read using the [Q3] command and is also the third byte in the heartbeat message. If more than one error is present, they are sent in a string.

Table 3-14 *Device Error Codes*

Error Code	ASCII character	Error Message/ Description	Caused by
0	@	No device errors detected after initialization.	Plunger and valve initialization complete. No errors detected and device ready for operation
1	A	Initialization error	Plunger or valve initialization error
7	G	Device not yet initialized	Plunger and valve not initialized since last reset
17	Q	FRAM or boot code check-sum failure	FRAM checksum fail. Factory default loaded or boot code checksum failure (can-not launch boot code)
20	T	Power-on self test fail	Power-on self test failed – memory test, voltage, reference voltage check ,etc.
21	U	Watchdog reset	Watchdog reset triggered due to internal error
22	V	Low voltage	Low line voltage detected during normal operation
23	W	Boot code checksum failure	Boot code checksum failure (cannot launch boot code)

In addition to the above, the following error codes are reported when reading error log using the [:<n>] command:

Error Code	ASCII character displayed	Error Message/ Description	Caused by
2	B	Invalid command	Invalid command or command type (CAN)
3	C	Invalid operand	Wrong command parameters received for a command
13	M	FRAM access error	Write/read verify to FRAM failed
15	O	Command overflow	Move command to valve or plunger received when move already in progress
16	P	Command not implemented	Command not implemented in firmware
18	R	Too many loops or loop command nesting imbalance	Too many loop nesting or loop command nesting imbalance; fewer [G] commands than [g] in commands in the string
19	S	Internal command execution error	Error in executing command due to internal error

Error Reporting Examples

[A400000R]	Returns an invalid parameter error (error 3) immediately after the command.
[A3000A350000R]	Returns an invalid parameter error (error 3) immediately after the command. Does not move the plunger.
[t2000R]	Returns an invalid command error (error 2) immediately after the command. Does not move plunger.
[A100t2000R]	Returns an invalid command error (error 2) immediately after the command. Does not move plunger.
Valve in Bypass [A100R]	Returns an error (error 11) immediately after the command. Does not move plunger.

Note: *For all error conditions, when queried using the [Q] command, the last registered error code is returned irrespective of the type of error.*

4 Setting Up the Centris Pump for Your Application

The Centris pump is capable of providing precision pumping in a wide variety of hardware and fluid systems. The interplay of fluid viscosity, aspiration and dispense speeds, and system geometry (syringe size, tubing inner diameter, and valve inner diameter) determine the behavior of the Centris pump in a particular application. Following is a description of the hardware, fluid, and pump control parameters to be evaluated and optimized in managing these interdependencies for optimal pump performance.

4.1 Glossary

air gap

A small volume of air at the end of the output tubing or sandwiched between two fluids in the pump system tubing. Air gaps may be created by aspirating air (programmed air gaps) or by the spring action of the fluid system (inertial air gaps).

aspirate/dispense tubing

Connects the valve output port to a sample source and destination. To ensure good breakoff, aspirate/dispense tubing tends to have a smaller I.D. than reagent tubing, and a necked-down or tapered end.

backlash

Mechanical play in the syringe drive created by accumulated mechanical clearances.

backpressure

The pressure which must be exceeded to move fluid through tubing. Backpressure is created by a combination of fluid inertia and friction.

breakoff

Describes how the last droplet of fluid exits the end of the output tubing following a dispense. Rapid or sharp breakoff means that the droplet exits cleanly with high inertia.

breakup

Undesired air gaps created by overly rapid aspiration.

carryover

Contamination of a volume of fluid by residual fluid from a previous aspiration or dispense. Carryover causes variability in final volume and concentration.

cavitation

Formation of air bubbles due to rapid pressure changes. Often caused by aspirating fluid into the syringe too quickly.

dilution effect

Reduction in sample or reagent concentration, caused by contact with system fluid or residual fluid from a previous aspiration or dispense.

I.D. ("inner diameter")

Diameter of the constraining wall of a fluid path.

priming

Completely filling the pump tubing and syringe with bubble-free fluid to allow sustained, reproducible pumping action. The air in an unprimed line acts as a spring, adversely affecting accuracy and precision.

reagent tubing

Connects the valve input port to a reagent source. Reagent tubing is used to fill the pump syringe; it tends to have a larger I.D. than aspirate/dispense tubing, and a blunt-cut end which extends into the reagent.

system fluid

A fluid used to prime the pump system that does not act as sample or reagent. Typically the system fluid is de-ionized water or a wash buffer and is isolated from sample or reagent fluid by an air gap to avoid intermixing.

syringe speed profile

Typically, the syringe plunger begins moving slowly, then ramps up to top speed. This allows the plunger to start moving gradually, without overloading the motor, and still provide maximum flowrate. The syringe plunger stops by ramping down in speed. This results in the most reproducible fluid breakoff for accurate dispensing.

Figure 4-1 *Syringe Speed*

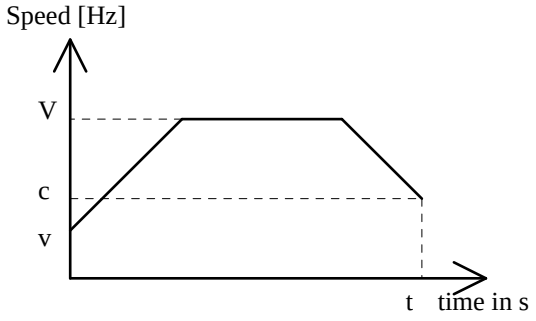

start speed [v]

The speed at which the syringe plunger starts moving.

top speed [V]

The maximum speed at which the syringe plunger moves.

cutoff speed [c]

The speed of the syringe plunger just before stopping.

slope [L]

Acceleration (deceleration) of the syringe plunger between start speed, top speed, and cutoff speed.

volume calculation

The volume aspirated or dispensed when the syringe plunger moves a specified number of increments depending on the syringe size. To determine the number of increments required to aspirate or dispense a given volume, use the following formula:

$$\text{\# of increments} = \frac{\text{pump resolution x volume}}{\text{syringe size}}$$

For example, to aspirate 100 µL using a Centris pump with 250 µL syringe,move the plunger as follows:

$$\frac{181{,}490 \text{ increments x } 100\ \mu\text{L}}{250\ \mu\text{L}} = 72{,}596 \text{ increments}$$

4.2 Optimizing Centris Pump Performance

Caution! *Run the pump only in the upright position. Do not move the pump valve or syringe plunger without first wetting or priming the pump.*

For command details, see Chapter 3, “Software Communication”.

To optimize Centris pump performance, follow these steps:

1 Check chemical compatibility.

Refer to a chemical compatibility chart to determine if the fluids in your application are compatible with the Centris syringe and valve materials. If not, a system fluid is required. Complete the optimization procedure with the fluids you will use in your final system.

Note that the system fluid is used to prime the syringe and tubing from inlet to outlet. After the tubing is primed (and before any sample or reagent is aspirated), an air gap must be taken into the aspirate/dispense tubing to separate the system fluid from subsequently aspirated sample or reagent. Air gaps should be aspirated slowly to avoid break-ups, and they should be

approximately one-tenth the volume of the aspirated fluid—or at least 10 µL—to avoid any dilution effect. Similar air gaps should separate each aspirated fluid when performing multiple aspirates with no intervening dispenses, in order to prevent premature mixing and/or contamination. In addition, the aspirate/dispense tubing must be long enough to hold the total aspirate volume without coming in contact with the valve or syringe.

2 Select syringe size.

Determine your volume and flowrate requirements. Select a syringe that accommodates the smallest and largest volumes to be dispensed without refill, as well as the desired flowrate for your application (see **top speed [V]** in Chapter 3, “Software Communication”). While smaller syringes allow better accuracy and precision for small volume dispenses, a larger syringe allows more aliquots when multiple aspirations or dispenses are required.

As a general rule for aspirate/dispense applications, aspirate speeds are relatively slow (50-200 µL/sec) and dispense speeds are relative fast (400-700 µL/sec). These values are useful as a starting point but should be optimized for each liquid handling application.

Note: *Flow rates depend greatly on the liquids, fluid path, flow restrictions, syringe size, dispense type (contact vs. free), and other application-specific limitations.*

3 Select tubing.

In tubing selection, the general rule is that smaller syringes work best with smaller I.D. tubing and larger syringes with larger I.D. tubing. The ceramic valves used with the Centris pump have an internal flow path diameter of 1 mm (0.039”). The exception is the 3-port valve, which has a flow path of 1.5 mm (0.059”). Plastic valves used with the Centris pump have an internal flow path diameter of 1.5 mm. For aspirate/dispense tubing a thermal-drawn tip or tapered tip is most common, providing good breakoff and excellent accuracy and precision for most applications. A necked-down tip may be used when aspirating very small volumes of sample, i.e., < 5 µL. A blunt-cut tip is better suited for large volume applications. For a description of the various types of tubing, see Appendix A, “Ordering Information”.

4 Make pump connections.

Connect power and communications cables to the pump, install syringe and tubing. Place the end of the input tubing in a reservoir of particle-free fluid; place the end of the output tubing in a waste reservoir. The Cavro Integration Kit is available for easy set up of your pump with power, cabling, and Fusion software.

5 Check communications to the pump.

– Open Cavro Fusion or other control software.
– Send any report command ([&], for example). Successful communication returns the revision number and a “Ready” status.

Possible errors:

– No response. Check for loose or incorrectly connected cables, or connection to the wrong computer COM port. Retry.

6 Initialize pump and set initialization speed.

– Send the command [ZR] to initialize the pump. Successful initialization moves the syringe plunger to the position “0” (fully dispensed) and returns a “Ready” status.

Possible errors:

– Error 1 (initialization error). Check for tubing blockage and reinitialize. If you are using very narrow I.D. tubing or pumping a viscous fluid, the initialization speed may need to be reduced. Repeat initialization using the [ZnR] command with an increasing <n> value until initialization is successful.

Caution! *To ensure robust initialization over the life of the Centris pump, set the initialization speed parameter <n> higher than the absolute minimum value for successful initialization.*

7 Prime the syringe and tubing lines.

– Send the command [IA181490OA0R] to pull fluid through the valve input position and into the syringe.

– Inspect the pump tubing for bubbles and re-prime until all bubbles are completely gone.

If bubbles remain after several priming strokes, check to ensure the fittings are tight and the syringe is tight within the valve. A tool may be needed to achieve an airtight seal between the fittings and the value.

Possible errors:

– Error 9 (plunger overload). See step 8.

8 Check aspirate/dispense.

Send the command [IA181490A0R] to aspirate a full syringe stroke (181490 increments) from input and dispense it to output.

Possible errors:

Error 9 (plunger overload). The stepper motor is unable to move the syringe plunger, probably because of excessive backpressure caused by excessive flowrate, narrow tubing I.D., or valve or tubing blockage. Note whether the error occurred during aspiration or dispensing. To differentiate between blockage and flowrate limitation, reduce syringe plunger speed by sending the above command preceded by progressively lower speed commands [V]. Repeat with decreasing plunger speed until the pump aspirates and dispenses successfully.

9 Set plunger speeds.

Optimized liquid handling performance requires plunger speed settings to be optimized for your specific liquid-handling application. This includes selection of the start speed, top speed, cutoff speed, and slope settings (see also Backlash Compensation command in Section 3.5.3, Set Commands.

For slow flow applications, the selection of speeds is based primarily on application requirements. For pipetting applications where throughput is not application limited, the fastest achievable settings are often preferred.

For such applications, aspiration is relatively slow (to avoid cavitation) and dispensing is relatively fast (to promote fluid breakoff). For contact dispense

steps (pipetting probe submerged in target solution), the dispense speed should be slow to achieve the smoothest and most accurate performance.

Based on the total system friction for your application (liquid path restrictions, fluid viscosity, and target volumes), the maximum theoretical flow rate may or may not yield the best performance. Excessively high flow rates may exceed available plunger force and trigger plunger overload errors or may cause fluids to leak around the syringe plunger/barrel interface.

Start speed, top speed, and slope all influence the maximum speed. To increase throughput, begin with default speeds for each value and increase [v], [V], and [L] (in that order) to reduce cycle times.

An aspirate speed that is too fast may be seen by a delay time of aspirated volume from the source bottle/tube after the aspirate move is complete (cavitation) and associated with inaccurate dispenses. It may also present itself through the temporary separation of the ceramic syringe piston from its magnetic coupling. In this case, the syringe retention clasp holds the syringe piston and the magnetic coupling is typically restored at the end of the aspirate step. The aspirate speed should be slowed down to prevent this from occurring.

A dispense speed that is too fast may be marked by plunger overload errors or inaccurate fluid dispense volumes. A slower slope may be used to ramp a large system friction load to a maximum speed without overloading the available plunger force and step loss detection.

Determine the maximum value for each speed for your specific application. Select values that are safely reduced from your empirically derived maximum values. This prevents differences between pumps, host instruments, or variation with time from inducing plunger overload errors not initially triggered during optimization testing.

Deceleration slope and cutoff speed settings are optimized based on dispense characteristics for the most reproducible droplet breakoff. To optimize cutoff speed, start with a relatively high cutoff speed value and monitor the dispense for any errors or liquid splattering.

Another condition that affects breakoff is the formation of inertial air gaps. This is seen as a small air gap inside the tubing at the tip. This occurs to a greater extent with high flow rates and it enhances the breakoff of liquid from the tip of the tubing. If an inertial air gap is not desired in the application, lowering the cutoff speed and/or the top speed removes the inertial air gap. However, this may not give a clean breakoff of the fluid.

In some instances it may not be possible improve fluid breakoff. Clean breakoff is important to accuracy and precision. It is a concern especially when using slow speeds, because drops usually adhere to the tip. Increasing the cutoff speed and deceleration ramp (slope) may also improve the fluid breakoff. Smaller I.D. tubing may improve breakoff, especially for smaller syringes.

Note: *It may not be possible to achieve good fluid breakoff under any conditions for some fluids, especially with smaller syringes or dispense volumes. For these applications, contact dispensing is recommended.*

4.3 Chemical Compatibility

Each application presents different possible chemical interactions. Before permanent installation, test equipment with the intended chemicals under the specific conditions of your application.

Caution! *Failure to test chemicals used in individual applications may result in damage to the pump and/or test results.*

DANGER! *Variations in chemical behavior during handling due to factors such as temperature, pressure and concentration can cause equipment to fail, even if it passed initial testing.* ***SERIOUS INJURY MAY RESULT****. Use suitable guards and/or personal protection when handling chemicals.*

The wetted materials used in the Centris pump are:

- Ceramic (Alumina) for ceramic valves and syringes
- Borosilicate glass for glass syringes
- PCTFE and PTFE for plastic valves
- PTFE for insert seal between syringe and valve and plunger seal for glass syringes

Please use a publicly available chemical compatibility chart or other similar reference resource to evaluate the suitability of these pump materials for your application prior to use.

4.4 Helpful Hints

To maintain performance, keep the following in mind when operating the Centris pump:

- Wipe up all spills immediately.
- Pumping hot or cold fluids may cause leaks, the result of differing coefficients of expansion of materials in the fluid path.
- In addition, performance of the Centris is verified at room temperature. Operation at higher or lower temperatures may limit performance or life of the Centris pump or its wetted components.
- To avoid accelerated wear or binding of the precision ceramic components used in the Centris pump, only filtered fluids should be used. Tecan recommends a maximum particle size of 0.3 µm.

Caution! *After determining the final valve and tubing configuration for your application, plug any unused valve ports before final use. This prevents accidental spills and unwanted chemical exposure.*

Caution! *Exercise caution when running crystalline or sticky reagents through the Centris pump. These compounds can cause the ceramic surfaces to bind if they are left to dry and can shorten the life of plastic valves or glass syringes. When using these types of reagents, please be sure to flush the syringe and valve with DI water or other cleaning solution after each use. Failure to do so can irreversibly damage the ceramic components and cause pump errors and/or shortened component life. For applications using saline or sticky reagents, please see Appendix G, "Centris Ceramic Syringe Wash Option"*

5 Maintenance

Although required maintenance may vary with your application, the following procedures are recommended for optimal performance of the Centris pump.

Perform maintenance tasks in these intervals:

- Daily
- Weekly
- Periodically

5.1 Daily Maintenance

To ensure proper operation of the Centris pump, perform these tasks daily:

- Inspect the pump(s) for leaks, and correct any problems.
- Wipe up all spills on and around the pump.
- Flush the pump(s) thoroughly with distilled or deionized water after each use and when the pump is not in use to prevent binding of the syringe and valve components.

Note: *Do not allow the pump(s) to run dry for more than a few cycles.*

5.2 Weekly Maintenance

The fluid path of the Centris pump must be cleaned weekly to remove precipitates such as salts, eliminate bacterial growth, and so on. Any of the three following cleaning procedures can be used:

- Weak detergent
- Weak acid and base
- 10% bleach

The procedures using these solutions are described in the following sections.

5.2.1 Weak Detergent Cleaning

To clean the pump with weak detergent, follow these steps:

1. Prime the pump with a weak detergent solution (e.g., 2% solution of CONTRAD®) and allow the solution to remain in the pump with the syringe fully lowered for 30 minutes.
2. After the 30-minute period, remove the reagent tubing from the detergent and cycle all the fluid from the syringe and tubing into a waste container.

3 Prime the pump a minimum of 10 cycles with distilled or de-ionized water. Leave the fluid pathways filled for storage.

Note: *CONTRAD® 100 can be purchased through Fisher Scientific. Order catalog number 04-355-27 for a 1 gallon container.*

5.2.2 Weak Acid-Base-Sequence Cleaning

To clean the pump with weak acid and base, follow these steps:

1. Prime the pump with 0.1 N NaOH and allow the solution to remain in the pump(s) for 10 minutes with the syringes fully lowered.
2. Flush the pump with distilled or deionized water.
3. Prime the pump with 0.1 N HCl, and allow the solution to remain in the pump for 10 minutes with the syringes fully lowered.
4. After a 10-minute period, remove the reagent tubing from 0.1 N HCl solution and cycle all the fluid from the syringes and tubing into a waste container.
5. Prime the pump a minimum of 10 cycles with distilled or deionized water.

5.2.3 10% Bleach Cleaning

To clean the pump with 10% bleach, follow these steps:

1. Make a solution of 10% bleach by adding one part of commercial bleach to nine parts of water.
2. Prime the pump with the 10% bleach and allow the solution to remain in the pump with the syringes fully lowered for 30 minutes.
3. After the 30-minute period, remove the reagent tubing from 10% bleach solution and cycle all the fluid from the syringes and tubing into a waste container.
4. Prime the pump a minimum of 10 cycles with distilled or deionized water.

5.3 Periodic Maintenance

Tubing, syringe fittings, and valves require periodic maintenance. If they become worn, you are likely to notice these symptoms:

- Decreased precision and accuracy
- Variable or moving air gap
- Leakage
- Syringe or valve overload error messages

If any of these symptoms occurs and it is not obvious which component is causing the problem, it is easiest and most economical to replace the pump's input and output tubing. The maintenance frequency depends on the duty cycle, fluids used, and instrument care.

Caution! *Without adequate flushing of the syringe after operation, ceramic syringe components can become seized due to the formation of salt crystals or the accumulation of sample residue. If this occurs, the syringe can be carefully removed and soaked in DI water in a sonicating bath for 30 minutes to attempt to restore functionality. A broken or irrevocably seized syringe will need to be replaced. See instructions in Section 5.3.3, Replacing a Syringe.*

5.3.1 Quality Control Assurance

Check the accuracy and precision of the Centris pump on a regular basis.

Tecan Systems recommends checking both accuracy and precision gravimetrically, using an analytical balance with the capability to measure to 0.01 mg. For volumes less than 10µl, a photometric measurement method should be used instead of gravimetric methods.

The syringe can be checked by programming in the desired volume and determining the weight of fluid dispensed.

To determine precision and accuracy, run a minimum of 20 replicates. The Mean, Standard Deviation, and Coefficient of Variation (see formula below) can then be calculated. The calculations to determine accuracy must take into account the specific gravity of water, which is dependent upon temperature. In addition, to prevent a false reading caused by fluid adhering to the tip of the aspirate tubing, a small amount of surfactant should be added to the water (e.g., Fluorad® at a 0.01% concentration).

% Coefficient of Variation = (Standard Deviation/Mean) * 100

$$\textbf{\%CV} = \left(\frac{\sqrt{\frac{1}{n-1}\left\{\sum_{i=1}^{n} X_i^2 - n\overline{X}^2\right\}}}{\overline{X}} \right) * 100$$

$$\textbf{\% Accuracy} = \left[\frac{\left(\frac{\overline{X}}{sg}\right) * 100}{Vol_{expected}} \right] - 100$$

where:

sg = specific gravity of H_20 @ 25°C = 0.99707

$Vol_{expected}$ = Expected volume to be dispensed

n = number of replicate

X = individual result

$\overline{X}$ = mean of all results

5.3.2 Replacing Dispense or Reagent Tubing

To replace dispense or reagent tubing, follow these steps:

1 To remove the tubing, use a 5/16" wrench and gently loosen the fittings.

2 Unscrew the fittings and remove the tubing.

3 To install new tubing, insert the fitting into the valve and tighten it finger tight.

4 Using a 5/16" wrench, turn the fitting another ¼ to ½ turn.

5.3.3 Replacing a Syringe

To remove or replace a syringe, carefully follow these steps. Please see Note: for details.

1 Initialize the pump.

2 Lower the plunger drive by sending the command [A80000R]. The plunger drive cannot be moved by hand without tools. If power is not applied, the plunger drive can be manually lowered by using a 2.5mm hex driver on the bottom of the drive lead screw.

3 For ceramic syringes, open the syringe retention clasp to release the base of the syringe plunger. Do not remove the ball bearing.

4 Unscrew the syringe thumb screw from the valve.

5 Remove the syringe assembly (barrel and piston) from the pump, taking care not to touch the ceramic material of the piston or to let the piston and barrel come apart.

Caution! *The smooth surfaces of the ceramic components in the syringe will not prevent the piston from falling out of the barrel. Exercise great caution with the handling, removal, or reinstallation of the syringe to prevent damage to the ceramic components or contamination of the surrounding work area.*

Note: *250 µL and 1.25 mL ceramic syringes can be removed without lowering the plunger drive from the home position. In this case, after the syringe retention clasp is opened, the ball bearing should be carefully removed while supporting the syringe piston to prevent it from dropping and becoming damaged. After the ball is removed, the syringe can be carefully unscrewed from the valve and removed. Once removed, the ball bearing and surrounding area can be easily wiped with water or gentle cleaners to clean before reuse.*

To install a ceramic syringe:

1. Insert the plunger end of the syringe carefully into the carriage mechanism. with the magnetic coupling in contact with the ball bearing. Close the clasp.
2. Extend the syringe barrel up to the valve and tighten the thumb screw. To make a good seal, tighten the syringe until the cap insert material first makes contact with the bottom of the valve sealing surface and then tighten another 1/8 to 1/4 turn.

Figure 5-1 *Ceramic Syringe Replacement*

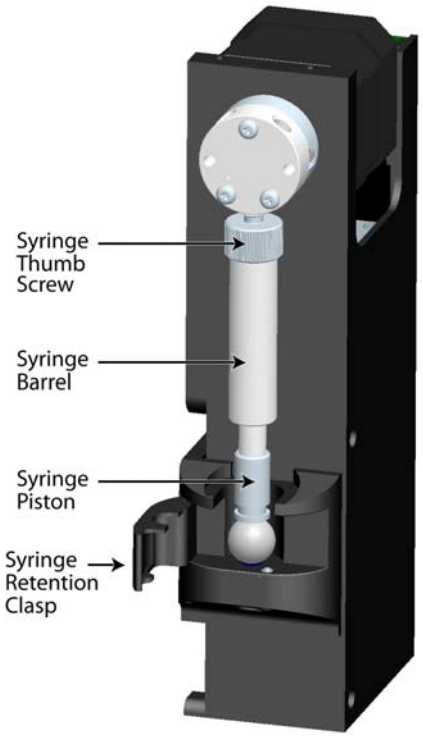

To install a glass syringe:

1 Insert the ball end of the syringe carefully into the capture mechanism as shown in Figure 5-2.

Figure 5-2 *Inserting the ball end of the glass syringe*

2 Lift the capture mechanism and syringe barrel to screw the syringe into the valve as shown in Figure 5-3. Tighten the syringe 1/4 turn past initial contact of the Teflon insert into the valve for a liquid seal.

Figure 5-3 *Screwing the glass syringe into the valve*

3 Tighten the knurled thumbscrew to secure the ball end of the syringe within the syringe capture mechanism as shown in Figure 5-4. Be sure that the ball is fully secured when tightened.

Figure 5-4 *Fully tightened syringe thumbscrew*

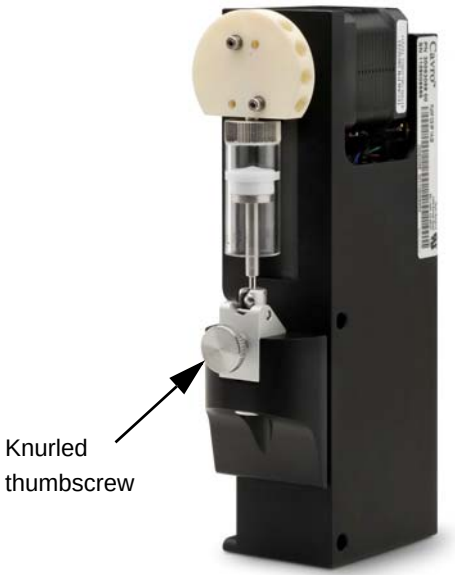

Note: *To obtain optimal performance and maximum syringe life, follow the syringe cleaning and maintenance procedures described in this chapter.*

Note: *Be sure to reconfigure the pump firmware when changing the syringe volume. Failure to do so will prevent correct use of volume-based aspirate and dispense commands. See Section 3.3.2, Pump Configuration Commands, for instructions on reconfiguring the pump.*

5.3.4 Replacing the Centris Valve

To replace the Centris valve, follow these steps:

1. Remove as much fluid as possible from the system by cycling the pump and using air as the system fluid.
2. Initialize the pump using the [ZR] command so that the valve motor shaft is in the correct position.
3. Issue an [A80000R] command to move the plunger down.
4. Remove the syringe and tubing.
5. Loosen the valve mounting screws, then remove the valve from the pump.
6. Install the new valve by placing it on the front panel so the screw holes and alignment pin (if present) line up. The valve coupler fitting mates to the valve motor shaft. Tighten the valve mounting screws.
7. Reinstall the syringe.

Caution! *Be sure to reconfigure the pump firmware when changing valve types. Failure to do so may damage the valve. See Section 3.3.2, Pump Configuration Commands, for instructions on reconfiguring the pump.*

Note: *Use care when handling the syringe plunger to avoid leaving residue.*

5.4 On-Site Replacements

5.4.1 Replacing the Printed Circuit Assembly (PCA)

To replace the printed circuit assembly, follow these steps:

1. Power off the pump.
2. Remove the screws that hold the printed circuit board to the pump.
3. Note the cable connection locations and unplug the cables from the board.
4. Plug the cables into the new board.
5. Install the new board and screw it into place.

6 Power on and reinitialize the pump.

Caution! *Take care during removal of the PCA to avoid contact between the valve encoder and the optical sensor at the top of the PCA.*

Note: *After PCA replacement, you must configure the PCA according to the configuration of your Centris valve type, baud rate, syringe size, backlash, etc.*

Figure 5-5 *Centris Pump Printed Circuit Assembly*

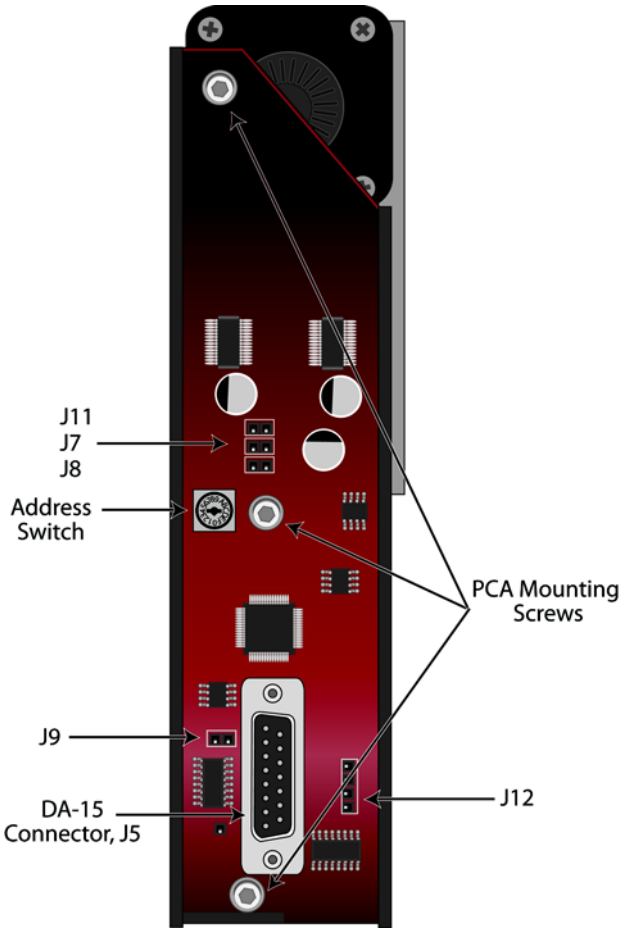

6 Technical Service

For information or questions regarding ordering or operating the Centris syringe pump, please contact Tecan Systems Technical Service using one of the methods listed below.

By phone	408-953-3100 or 800-231-0711
By fax	408-953-3101
By e-mail	helpdesk-sy@tecan.com

Technical support is available 7:00 a.m. to 5:30 p.m. PST, Monday – Friday.

Our mailing address is:

Tecan Systems, Inc.
2450 Zanker Road
San Jose, CA 95131
USA

When calling for technical service, have the following information ready:

- Part number
- Serial number
- Model type
- Description of the problem

This page has been intentionally left blank.

A Ordering Information

There are hundreds of available configurations of the Cavro® Centris Pump. Please contact your local Tecan representative to select the configuration that is best for your needs.

A.1 Centris Spare Parts

The following spare parts are available:

- Syringes
- Valves
- Printed circuit boards
- Syringe capture ball bearing
- Mounting kit
- Wash Option spares kits
- Interconnect tubing

Table A-1 *Ceramic Syringes*

Part Number	Description
30038200	Syringe, 250 µL
30038201	Syringe, 1.25 mL
30038202	Syringe, 5.0 mL

Table A-2 *Glass Syringes*

Part Number	Description
20730070	Syringe, 50 µL, black seal
20730071	Syringe, 100 µL, black seal
20731069	Syringe, 250 µL, PTFE
20728661	Syringe, 500 µL, PTFE
20728662	Syringe, 1.0 mL, PTFE
20737755	Syringe, 1.0 mL, black seal
20728663	Syringe, 2.5 mL, PTFE
20728664	Syringe, 5.0 mL, PTFE
30064652	Syringe, 12.5 mL, PTFE

Table A-3 *Ceramic Valves*

Part Number	Description
30035942	Ceramic valve, 3-port (1/4-28” fitting)
30038156	Ceramic valve, 4-port (1/4-28” fitting)
30038154	Ceramic valve, 4-port dual loop (1/4-28” fitting)
30038158	Ceramic valve, 3-port distribution (1/4-28” fitting)
20737492	Ceramic valve, 6-port distribution (1/4-28” fitting)
30037295	Ceramic valve, 6-port distribution with chamfer (1/4-28” fitting)
20737494	Ceramic valve, 9-port distribution (1/4-28” fitting)
30038160	Ceramic valve, 12-port distribution (1/4-28” fitting)

Table A-4 *Plastic Valves*

Part Number	Description
20729370	Plastic valve, 3-port (1/4-28” fitting)
20731305	Plastic valve, 3-port (M6 fitting)
20736658	Plastic valve, 4-port Teflon (1/4-28” fitting)
20736656	Plastic valve, 4-port Teflon (M6 fitting)
20738638	Plastic valve, 4-port Dual Loop (1/4-28” fitting)
30059594	Plastic valve, 3+, Teflon (1/4-28” fitting)
30061823	Plastic valve, 3+, Teflon (M6 fitting)

Table A-5 *Printed Circuit Board Assembly*

Part Number	Description
30051985	PCBA, Centris 232/485/CAN

Table A-6 *Pump Evaluation Software*

Part Number	Description
20740504	Integration kit with Fusion software (Basic)

Table A-7 *Miscellaneous Parts*

Part Number	Description
30038198	Ceramic syringe capture ball bearing (pkg. of 3)
30038197	Mounting kit
30051986	Ceramic Wash Option Field Service Kit, 5ml
30051987	Ceramic Wash Option Field Service Kit, 1.25ml
30051988	Ceramic Wash Option Field Service Kit, 250µl

Table A-8 *Interconnect Tubing*

Part Number	Description	Material	Length (Inches)	ID (Inches)	Tube End(s)
20001067	Reagent tube	TFE	16”	.063”	1/4-28” to blunt cut
20004333	Aspirate/dispense tube	TFE	33”	.055”	Necked
20004410	Aspirate/dispense tube	FEP	40”	.031”	Thermal drawn
20004609	Reagent tube	FEP	12”	.027”	1/4-28” to blunt cut
20005133	Aspirate/dispense tube	FEP	29”	.031”	Thermal drawn
20005723	Aspirate/dispense tube	FEP	33”	.031”	Necked
20005729	Reagent tube	TFE	21”	.031”	1/4-28” to blunt cut
20005402	Aspirate/dispense coiled tube	FEP	64”	.027”	Thermal drawn
20006865	Interconnect tube	FEP	3”	.054”	1/4-28” to 1/4-28”
20720592	Reagent tube	TFE	61.5”	.063”	1/4-28” to blunt cut
20720595	Aspirate/dispense tube	FEP	61.5”	.055”	Necked
20720597	Aspirate/dispense tube	FEP	60”	.031”	Thermal drawn
20721370	Reagent tube	TFE	27”	.055”	1/4-28” to blunt cut
20724275	Aspirate/dispense tube	FEP	22”	.051”	1/4-28” to M6
20724780	Aspirate/dispense tube	FEP	39”	.076”	1/4-28” to 1/4-28”
20725788	Interconnect tube	FEP	8”	.051”	1/4-28” to 1/4-28”
20725876	Aspirate/dispense tube	FEP	30”	.059”	1/4-28” to M6
20725896	Interconnect tube	TFE	20”	.060”	1/4-28” to 1/4-28”
20726172	Aspirate/dispense tube	TFE	24”	.060”	1/4-28” to 1/4-28”

Note: *Custom tubing lengths, ends, and fittings are available upon request.*

A.2 Mating Connector Suppliers

Tecan Systems does not sell mating connectors beyond those found on its evaluation unit. For customer convenience, a list of DA-15 mating connectors and their suppliers is provided below.

Table A-9 *DA-15 Mating Connectors*

Manufacturer	Description	Manufacturing Part Number
Cable Connector, Receptacle		
AMP	15 pin female - solder cup, receptacle	747909-2
Cinch	15 pin female - solder cup, receptacle	DA-15S
Cable Connector, Housing		
AMP	Plastic housing with locks	207908-4
Cinch	Plastic housing with locks	SDH-15GL-CS
Circuit Board Connectors		
AMP	15 pin female - straight for 0.62 to 0.93 mm thick PCB	745411-1
Flat Ribbon		
3M	15 pin female - 15 pin flat ribbon receptacle	89815-8000
3M	15 pin female - strain relief	3448-8D15A

This page intentionally left blank.

B Plunger Information

B.1 Plunger Time Calculations

Following are calculations for determining Centris plunger move timing. Four different cases are presented below.

1 Start, top, and cutoff speeds are equal, or top speed is less than 50 Hz.
2 Typical move with ramp up, constant speed and ramp down.
3 Move is too small to reach cutoff speed.
4 Move is too small to reach top speed.

Note: *Plunger move times are calculated assuming backlash compensation has been set to zero; K<n> where <n> = 0.*

Table B-1 *Symbol Definitions*

Symbol	Name	Unit
v	Start Speed	Increments/s (Hz)
V	Top Speed	Increments/s (Hz)
V_n	Theoretical Top Speed	Increments/s (Hz)
c	Cutoff Speed	Increments/s (Hz)
L	Slope	160,000 Increments/s^2
A	Move Steps	Increments
t_1	Ramp Up Time	Seconds
t_2	Constant Speed Time	Seconds
t_3	Ramp Down Time	Seconds
t	Total Move Time	Seconds
A_1	Ramp Up Steps	Increments
A_2	Constant speed Steps	Increments
A_3	Ramp Down Steps	Increments

Note: *Cutoff speed cannot be less than start speed.*

B.1.1 Move Calculations

Case 1. Start, Top, and Cutoff Speeds are Equal or Top Speed is Less than 800 Hz

Case 1 is used when $v = V = c$ or $V < 800$

Diagram of move:

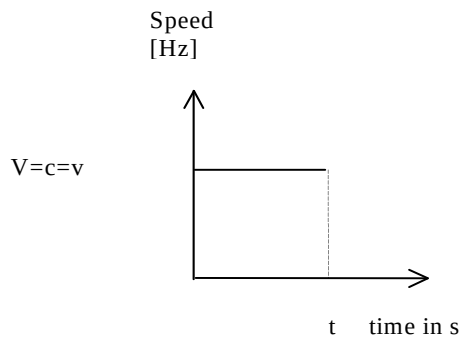

Calculation:

v = 900 Hz	L = 14
V = 900 Hz	A = 6000 increments
c = 900 Hz	

Total Move Time:

$t = \frac{A}{V} = \frac{6000}{900} = 6.67$ seconds

Case 2. Ramp Up, Constant Speed, Ramp Down

Case 2 is used when $A_1 + A_3 < A$

Diagram of Move:

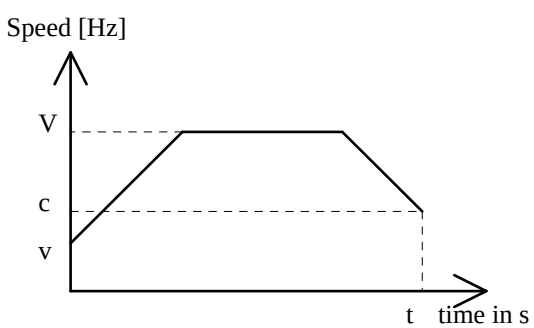

Calculation:

v = 800 Hz L = 14

V = 116,000 Hz A = 120,000 increments

c = 1000 Hz

Ramp Up Increments

$$A_1 = \frac{V^2 - v^2}{2L} = \frac{116000^2 - 800^2}{2 \times 14 \times 160000} = \text{3003 increments}$$

Ramp Down Increments

$$A_3 = \frac{V^2 - c^2}{2L} = \frac{116000^2 - 1000^2}{2 \times 14 \times 160000} = \text{3003 increments}$$

If $A_1 + A_3 < A$ (3003 + 3003 < 120000) then:

Ramp Up Time

$$t_1 = \frac{V - v}{L} = \frac{116000 - 800}{14 \times 160000} = \text{0.051 seconds}$$

Ramp Down Time

$$t_3 = \frac{V - c}{L} = \frac{116000 - 1000}{14 \times 160000} = \text{0.051 seconds}$$

Constant Speed Increments

$A_2 = A - A_1 - A_3 = 120000 – 3003 – 3003 = 113,994$ increments

Constant Speed Time

$$t_2 = \frac{A_2}{V} = \frac{113994}{116000} = 0.983 \quad \text{seconds}$$

Total Move Time

$t = t_1 + t_2 + t_3 = 0.051 + 0.983 + 0.051 = 1.085$ seconds

Case 3. Move Too Small to Reach Cutoff Speed

Case 3 is used when $V_n < c$

Diagram of Move:

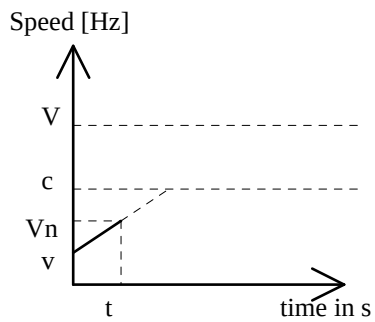

Calculation:

v = 800 Hz	L = 14
V = 11600 Hz	A = 4 increments
c = 1800 Hz	

Theoretical Top Speed

$$V_n = \sqrt{2AL + v^2} = \sqrt{2 \times 4 \times 14 \times 160000 + 800^2} = 4308 \text{ Hz}$$

Total Move Time

$$t = \frac{V_n - v}{L} = \frac{4308 - 800}{14 \times 160000} = 0.002 \text{ seconds}$$

Ramp Up Increments

$A_1 = A = 4$ increments

Case 4. Move Too Small to Reach Top Speed

Case 4 is used when $V_n < V$ and $V_n > c$

Diagram of Move:

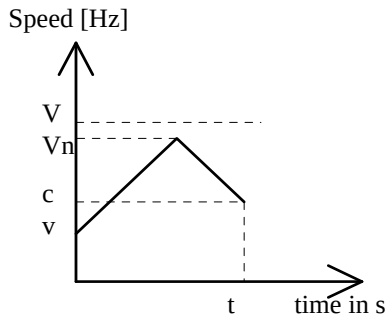

Calculation:

v = 800 Hz L = 14

V = 116000 Hz A = 2000 increments

c = 1800 Hz

$$V_n = \sqrt{AL + \frac{v^2 + c^2}{2}} = \sqrt{2000 \times 14 \times 160000 + \frac{800^2 + 1800^2}{2}} = 66947 Hz$$

Ramp Up Increments

$$A_1 = \frac{V_n^{\ 2} - v^2}{2L} = \frac{66947^2 - 800^2}{2 \times 14 \times 160000} = 1000 \text{ increments}$$

Ramp Down Increments

$$A_3 = \frac{V_n^{\ 2} - c^2}{2L} = \frac{66947^2 - 1800^2}{2 \times 14 \times 160000} = 1000 \text{ increments}$$

Total Move Time

$$t = \frac{2V_n - v - c}{L} = \frac{(2 \times 66947) - 800 - 1800}{14 \times 160000} = 0.06 \text{ seconds}$$

This page has been intentionally left blank.

C ASCII Chart of Codes for U.S. Characters

Table C-1 *ASCII Chart of Codes for U.S. Characters*

Decimal	Hexadecimal	Character or Function	Decimal	Hexadecimal	Character or Function
0	00	none	25	19	EM
1	01	SOH	26	1A	SUB
2	02	STX	27	1B	ESC
3	03	ETX	28	1C	FS
4	04	EOT	29	1D	GS
5	05	ENQ	30	1E	RS
6	06	ACK	31	1F	US
7	07	BEL	32	20	SP
8	08	BS	33	21	!
9	09	HT	34	22	"
10	0A	LF	35	23	#
11	0B	VT	36	24	$
12	0C	FF	37	25	%
13	0D	CR	38	26	&
14	0E	SO	39	27	' (apostrophe)
15	0F	SI	40	28	(
16	10	DLE	41	29	)
17	11	DC1	42	2A	*
18	12	DC2	43	2B	+
19	13	DC3	44	2C	, (comma)
20	14	DC4	45	2D	- (en dash)
21	15	NAK	46	2E	. (period)
22	16	SYN	47	2F	/
23	17	ETB	48	30	0
24	18	CAN	49	31	1

Decimal	Hexadecimal	Character or Function	Decimal	Hexadecimal	Character or Function
50	32	2	78	4E	N
51	33	3	79	4F	O
52	34	4	80	50	P
53	35	5	81	51	Q
54	36	6	82	52	R
55	37	7	83	53	S
56	38	8	84	54	T
57	39	9	85	55	U
58	3A	:	86	56	V
59	3B	;	87	57	W
60	3C	<	88	58	X
61	3D	=	89	59	Y
62	3E	>	90	5A	Z
63	3F	?	91	5B	[
64	40	@	92	5C	\ (backslash)
65	41	A	93	5D	]
66	42	B	94	5E	^ (control)
67	43	C	95	5F	— (emdash)
68	44	D	96	60	` (tick)
69	45	E	97	61	a
70	46	F	98	62	b
71	47	G	99	63	c
72	48	H	100	64	d
73	49	I	101	65	e
74	4A	J	102	66	f
75	4B	K	103	67	g
76	4C	L	104	68	h
77	4D	M	105	69	i

Decimal	Hexadecimal	Character or Function	Decimal	Hexadecimal	Character or Function
106	6A	j	117	75	u
107	6B	k	118	76	v
108	6C	l	119	77	w
109	6D	m	120	78	x
110	6E	n	121	79	y
111	6F	o	122	7A	z
112	70	p	123	7B	{ (left brace)
113	71	q	124	7C	| (vertical bar)
114	72	r	125	7D	} (right brace)
115	73	s	126	7E	~ (tilde)
116	74	t	127	7F	DEL

This page has been intentionally left blank.

D Centris Pump Specifications

Table D-1 *Centris Pump Specifications*

Note: *Specifications listed here are subject to change without notice.*

Dimensions	Height	184 mm (7.25 in)
	Width	44.5 mm (1.75 in)
	Depth	68.7 mm (2.7 in) from front panel to connector flange
	Weight	1.3 kg (2.83 lb)
Plunger Drive	Principle	TFE-coated lead screw with anti-backlash nut and linear encoder for step-loss detection
	Travel	30 mm
	Resolution	181,490 increments
	Plunger speed	Variable from less than 1.0 sec/stroke to more than 50 hr/stroke
	Precision	0.05% CV at full stroke (at 25 °C (77 °F) with 1.25 mL ceramic syringe using deionized water)
	Accuracy	0.25% deviation from expected result at full stroke (at 25 °C (77 °F) with 1.25 mL ceramic syringe using deionized water)
	Dynamic range	> 3 orders of magnitude (<0.1–100% stroke)
	Life expectancy	5 million moves (per Tecan life test protocols)
Ceramic Syringes	Barrel material	Alumina ceramic
	Plunger material	Alumina or Zirconia ceramic
	Plunger end cap material	PTFE
	Syringe sizes	250 µL, 1.25 mL, and 5.0 mL
Glass Syringes	Barrel material	Borosilicate glass
	Plunger end cap material	PTFE
	Syringe sizes	50 µL, 100 µL, 250 µL, 500 µL, 1.0 mL, 1.25 mL, 2.5 mL, 5.0 mL, and 12.5 mL
Valve Drive	Principle	Stepper motor with optical encoder for positioning feedback
	Turn Time	300ms between adjacent ports

Ceramic Valves	Material	Alumina ceramic
	Fittings	1/4–28 tubing and syringe ports
	Flow path diameter	1.0mm (1.5mm for 3-port valve)
	Valve options	3-port 4-port 4-port dual-loop 3-port distribution 6-port distribution 6-port distribution chamfer 9-port distribution 12-port distribution
Plastic Valves	Material	PCTFE and PTFE
	Flow Path Diameter	1.5 mm
	Valve Options	3-port 4-port 4-port dual-loop 3-port distribution
Power Requirements	Voltage	24 VDC ± 10%
	Current (peak)	1.5 A (typical), 2.5 A (max)
	Current (continuous)	1.0 A (typical)
Interface	Types	RS-232, RS-485, and CAN
	Baud rates	9600 or 38400 (RS-232 and RS-485) 100K, 125K, 250K, 500K, and 1M CAN
	Format	Data bits: 8 Parity: No Stop bit: 1 Half duplex
Communications	Addressing	Up to 16 individual addresses available
	Communications	Data terminal and OEM protocol (with error recognition)
Firmware		Programmable plunger speeds Programmable ramps Change speed on the fly Absolute or relative positions Programmable delays Programmable loops Terminate moves Monitoring and logging diagnostics Programmable non-volatile memory
Digital Inputs		Two TTL level inputs with 4.7k pull-ups

Digital Outputs		Three outputs, CMOS (HC) level
Environmental	Operating temperature (mechanism)	15–50°C (59° – 122°F)
	Operating humidity (mechanism)	20–80% RH at 40°C (104°F)
	Storage temperature	-20°–70°C (-4°–176°F), after fluid purge
Safety and Regulatory Compliance		The Centris is a UL recognized component (standard UL61010A-1): Tecan Systems' UL customer file number is E164638, and Tecan's Quality System is ISO 13485 Certified. This device meets the requirements set by the European Union's Directive 2002/95/EC on the Restriction of Hazardous Substances (RoHS).

This page has been intentionally left blank.

E Command Quick Reference

E.1 Pump Configuration Commands

Command	Value of <n>	Description
U	0	No valve
	1	3-way valve (3-port/Y-valve) (default)
	2	4-way valve (4-port)
	7	6-port distribution valve
	8	9-port distribution valve
	9	Dual-loop valve
	11	3-port distribution valve
	12	12-port distribution valve
	20	Set pump to self-test mode if address=15 (default)
	21	Clear self-test mode
	30	Set run from NVRAM mode
	31	Clear run from NVRAM mode (default)
	35	Auto-detect serial communication protocol (default)
	36	Use OEM serial communication protocol
	37	Use DT serial communication protocol
	38	Enable line sync character at start of message only (default)
	39	Disable line sync characters
	40	Enable line sync characters at start and end of message
	41	Set serial baud rate to 9600 baud (default)
	47	Set serial baud rate to 38400 baud
	51	Set CAN baud rate to 100 Kbaud (default)
	52	Set CAN baud rate to 125 Kbaud
	53	Set CAN baud rate to 250 Kbaud
	54	Set CAN baud rate to 500 Kbaud
	55	Set CAN baud rate to 1 Mbaud
	60	Enable Heartbeat message for CAN
	61	Disable Heartbeat message for CAN (default)
	90	Set syringe volume - 250 µL
	91	Set syringe volume - 1250 µL (default)
	92	Set syringe volume - 5000 µL

Command	Value of <n>	Description (cont.)
	93	Set syringe volume - 50 µL
	94	Set syringe volume - 100 µL
	95	Set syringe volume - 500 µL
	96	Set syringe volume - 1000 µL
	97	Set syringe volume - 2500 µL
	98	Set syringe volume - 12500 µL

E.2 Initialization Commands

Command	Value of <n>	Description
Z<n_1>, <n_2>, <n_3>	<n_1> 4–25 = Initializes at the defined speed	Initializes the plunger drive and homes the valve in a *clockwise* direction
	<n_2> 0 = Sets initialization input port to Port 1 1–X = Sets initialization input port for distribution valves, where X is the number of ports on the valve	Sets initialization input port
	<n_3> 0 = Sets initialization output port to Port X 1–X = Sets initialization output port for distribution valves, where X is the number of ports on the valve	Sets initialization output port

Command	Value of <n>	Description
Y<n_1>, <n_2>, <n_3>	<n_1> 4–25 = Initializes at the defined speed	Initializes the plunger drive and homes the valve in a *counter-clockwise* direction
	<n_2> 0 = Sets initialization input port to Port 1 1–X = Sets initialization input port for distribution valves, where X is the number of ports on the valve	Sets initialization input port
	<n_3> 0 = Sets initialization output port to Port X 1–X = Sets initialization output port for distribution valves, where X is the number of ports on the valve	Sets initialization output port
W<n>	<n_1> 4–25 = initializes at the defined speed	Initializes the plunger drive only (commonly used for pumps without valve)
w<n_1>, <n_2>	<n_1> 1–X = Sets initialization port where X is the number of ports on the valve	Initializes the valve drive only
	<n_2> 0 = Valve moves in a *clockwise* direction; valve ports numbered in a *clockwise* direction 1 = Valve moves in a *counterclockwise* direction; valve ports numbered in a *counterclockwise* direction	Initializes the valve drive only
z		Simulates initialization and sets the current position of the linear encoder as the home position

E.3 Valve Commands

Command	Description
I	Moves valve to input position via shortest path (non-distribution valves)
I <n>	Moves valve clockwise to port <n> (distribution valves)
O	Moves valve to output position via shortest path (non-distribution valves)
O <n>	Moves valve counterclockwise to port <n> (distribution valves)
B	Moves valve to bypass position via shortest path (non-distribution valves)
E	Moves valve to extra position via shortest path (non-distribution valves)

E.4 Plunger Movement Commands/Status Bit Reports

Command	Value of <n>	Description
A<n_1>, <n_2>	<n_1> = 0-Range if <n_2> = 0. <n_1> = 0.000 - syringe volume if <n_2> = 1.	Moves the plunger to Absolute position <n_1>, where n1 is specified in increments or in microliters
P<n_1>, <n_2>	<n_1> = 0-Range if <n_2> = 0. <n_1> = 0.000 - syringe volume if <n_2> = 1.	The [P] commands moves the plunger down the specified number of increments or microliters relative to its current position
D<n_1>, <n_2>	<n_1> = 0-Range if <n_2> = 0. <n_1> = 0.000 - syringe volume if <n_2> = 1.	The [D] commands moves the plunger up the specified number of increments or microliters relative to its current position

E.5 Set Commands

Command	Value of <n>	SyringeVol	Description	Default value
L<n_1>, <n_2>	<n_1> 1...40	N/A	Select plunger ramp-up slope	(8)
	<n_2> 1...40		Select plunger ramp-down slope	(8)
v<n_1>, <n_2>	<n_1> 800–32000 if <n_2> = 0		Set start speed (inc/sec)	(1600)
	<n_1> 0.221…8.816 if <n_2> = 1.	50 µl	Set start speed in microliters per second. Up to three decimal places are allowed.	
	<n_1> 0.441…17.632 if <n_2> = 1.	100 µl		
	<n_1> 1.102…44.080 if <n_2> = 1.	250 µl		N/A
	<n_1> 2.203…88.160 if <n_2> = 1.	500 µl		
	<n_1> 4.405…176.320 if <n_2> = 1.	1000 µl		
	<n_1> 5.507…220.400 if <n_2> =1.	1250 µl		
	<n_1> 11.013…440.801 if <n_2> = 1.	2500 µl		
	<n_1> 22.025…881.603 if <n_2> =1.	5000 µl		
	<n_1> 55.062…2204.009 if <n_2> = 1.	12500 µl		

Command	Value of <n>	SyringeVol	Description	Default value
V<n_1>, <n_2>	<n_1> 1.0–200000 if <n_2>=0		Set top speed (inc/sec)	(80000)
	<n_2> 0.001…55.099 if <n_2>=1	50 µl	Set top speed in micro-liters per second. Up to three decimal places are allowed.	N/A
	<n_2> 0.001…110.198 if <n_2>=1	100 µl		
	<n_2> 0.002…275.497 if <n_2>=1	250 µl		
	<n_2> 0.003…550.994 if <n_2>=1	500 µl		
	<n_2> 0.006…1101.989 if <n_2>=1	1000 µl		
	<n_2> 0.007…1377.486 if <n_2>=1	1250 µl		
	<n_2> 0.014…2754.973 if <n_2>=1	2500 µl		
	<n_2>0.027…5509.946 if <n_2>=1	5000 µl		
	<n_2> 0.066…13774.867 if <n_2>=1	12500 µl		
c<n_1>, <n_2>	<n_1> 800–64000 if <n_2>=0		Cutoff speed (increments/s)	(1600)
	<n_1> 0.221…17.631 if <n_2> =1.	50 µl	Set cutoff speed in micro-liters per second. Up to three decimal places are allowed.	
	<n_1> 0.441…35.263 if <n_2> =1.	100 µl		
	<n_1> 1.102…88.159 if <n_2> = 1.	250 µl		N/A
	<n_1> 2.203…176.319 if <n_2> =1.	500 µl		
	<n_1> 4.405…352.638 if <n_2> =1.	1000 µl		
	<n_1> 5.507…440.798 if <n_2> = 1.	1250 µl		
	<n_1> 11.013…881.597 if <n_2> =1.	2500 µl		
	<n_1> 22.025…1763.194 if <n_2> =1.	5000 µl		
	<n_1> 55.062…4407.987 if <n_2> =1.	12500 µl		
S<n>	<n> 0–50		Speed code	(7)

Command	Value of <n>	SyringeVol	Description	Default value
K<n>	<n> 0–4000		Number of backlash increments	(0)
k<n>	<n> 0–4000		Initialization gap increments	(1600)
J<n>	<n> 0–7		Sets or clears specific digital outputs	(0)
>$<n_1>$, $<n_2>$	$<n_1>$ 0–15		User data in NVRAM location	(0)
	$<n_2>$ 0–255		User data to load into NVRAM.	(0)

E.6 Control Commands

Command	Value of <n> or $<n_1>$	Default value	Description
R			Executes a previously loaded but unexecuted command string
X			Repeats last command string
G<n>	0–50000		Repeats command sequence
g			Marks start of a repeat sequence
M<n>	10–30000	10	Delay in milliseconds
H$<n_1>$, $<n_2>$	0–3	0	Halts command string execution based on parameters specified for $<n_1>$ and $<n_2>$
T			Terminates command
!			Reset command
F			Executes single command on the fly
C			Clears command buffer

E.7 Non-Volatile Memory (EEPROM) Commands

Command	Value of <n>	Description
s$<n_1>$, $<n_2>$	<n1> = 0–15 <n2> = command string to load	Loads command string into location in NVRAM
e<n>	0–15	Executes command string from NVRAM
i		Writes device data to non-volatile memory
r<n>	0	Restores device data from NVRAM
	1	Reads system and device data from FLASH memory (factory default)

E.8 Report Commands

Command	Description
Q or Q0	Report Pump Status (serial only) and the last registered error code in the status byte (serial and CAN)
Q1	Report Plunger Extended Error Code
Q2	Report Valve Extended Error Code
Q3	Report Device Extended Error Code
&<n>	Reports device firmware part number and revision (n = 0) and firmware version (n = 1)
:<n>	Report Error Log <n> 1–100 (n=1 returns the most recent error)
= <n>	Reports last command character received <n> 1–1000 (n=1 returns the most recent error)
< <n>	Reports user data stored in NVRAM <n> <n> 0–15
? or ?0	Reports absolute plunger position in increments (from hard stop)
?1	Reports current plunger position in increments (from home position)
?2	Reports plunger encoder position in mm (approx.)
?3	Reports plunger initialization gap steps in increments
?4	Reports number of backlash steps in increments
?6	Reports start speed in increments per second
?7	Reports top speed in increments per second
?8	Reports cutoff speed in increments per second
?9	Reports plunger drive ramp-up slope code setting
?10	Reports plunger drive ramp-down slope code setting
?16	Report the plunger maximum range in increments
?17	Report the Syringe Volume in micro-liters
?18	Report plunger absolute position in micro-liters
?20	Reports valve position ([i], [o], [b], or [e]) or (“1” – <n>)
?23	Reports the firmware part number and revision string (same as [&0])
?29	Reports the pump status (1=Busy or 0=Ready) and last registered error code
?30	Reports status of digital input #1 (0 = 0Volts, 1 = 5Volts)
?31	Reports status of digital input #2 (0 = 0Volts, 1 = 5Volts)
?36	Report start speed in micro-liters per second
?37	Report top speed in micro-loiters per second
?38	Report cutoff speed in micro-liters per second
?40	Reports total operating time in minutes
?41	Reports number of device power-ups
?42	Reports the total number of pump initializations (absolute) ([Z],[Y],[W])
?43	Reports the total number of pump initializations since last device power up or reset. ([Z],[Y],[W])

Command	Description
?44	Reports the total distance of plunger movement in meters (calculated)
?45	Reports the total number of plunger movements (absolute). Initialization moves are not included.
?46	Reports the total number of plunger movements since last device power up or reset. Initialization moves are not included.
?47	Reports the total number of valve movements (absolute). Initialization moves are not included.
?48	Reports the total number of valve movements since last device power up or reset.
?50	Reports Current power supply voltage In volts
?51	Reports highest recorded power supply voltage in volts
?52	Reports lowest recorded power supply voltage in volts
?53	Reports real-time pump temperature in ºF
?54	Reports highest recorded temperature in ºF
?55	Reports lowest recorded temperature in ºF
?60	Reports number of firmware downloads
?61	Reports application firmware compilation time. Format: ‘hh:mm:ss’
?62	Reports application firmware compilation date. Format: ‘mmm-dd-yyyy’
?63	Reports the actual downloaded firmware version string. Format: ‘CENTRIS-Vx.yyy-MM/YYYY” ‘. Same as [&1].
?64	Reports boot firmware part number and revision string. Format: ‘xxxxxxxx Rev xx’
?65	Reports the checksum of the application firmware
?67	Reports command buffer status (0 = Buffer empty, 1 = Buffer not empty).
?76	Reports pump configuration in ASCII text
?80..95	Reports Command String in FRAM loaded via [s] command ?80 returns s0…?95 returns s15
?96	Reports self-test command string
?99	Reports currently loaded command string

E.9 Diagnostic Commands

Command	Value of <n>	Description
d<n>	0	Plunger force test. Reports the minimum current required in milli-amps, for the plunger motor to move without step-loss.
	1	Valve force test. Reports the minimum current required in milli-amps, for the valve motor to move without step-loss.
	2	Priming confirmation. Reports number of increments moved after moving valve to a non-port position. The device needs to be initialized before performing this test.
@<n>	0	Clear Min/Max voltage.
	1	Clear Min/Max temperature.
	2	Clear all device counters. This includes: a. No. of device initializations b. No. of plunger movements c. No. of valve movements d. Total plunger distance moved

This page has been intentionally left blank.

F Command Quick Reference

CAN Communication Commands

Command Type	Serial Command	CAN Equivalent	
		Frame Type	CAN Command (ASCII)
Initialization	Z, Y, W, w, z	1	Z, Y, W, w, z
Plunger movement	A, P, D	1	A, P, D
Valve movement	I, O, B, E	1	I, O, B, E
Set	S, V, v, c, L, K, k, J, >, s, e, U	1	S, V, v, c, L, K, k, J, >, s, e, U, b
Set (on-the-fly)	V	0	V
Control	G, g, M, H, i, r	1	G, g, M, H, i, r
Control	!	1	!
		2	0
Control	R	1	R
		2	1
Control	C	1	C
		2	2
Control	X	1	X
		2	3
Control	T	0	T
		2	4
Control (on-the-fly)	F	1	F
Report	?<n> & <n> = 0–99 for valid values of <n>	6	0 through 99 for valid values of command
Report	Q, :, =, <, &	6	Q, :, =, <
Diagnostics	d, @	1	d, @

This page has been intentionally left blank.

G Centris Ceramic Syringe Wash Option

G.1 Introduction

The Wash Option is an accessory to extend the functionality of the Centris pump configured with ceramic syringes by providing a means of keeping the pump's syringe and barrel moist, preventing build-up from saline and sticky solutions. A Wash Option is available for each syringe size.

Figure G-1 *Centris Pump with Wash Option*

G.1.1 How the Wash Options Works

The Wash Option is clamped to the base of the ceramic syringe. It has two 1/4-28 threaded ports and a drain screw. A high performance piston seal in the chamber bottom holds the wash liquid inside the reservoir. By filling the reservoir with a wash fluid such as deionized water, the syringe piston is constantly washed during operation, extending the life of the syringe in difficult applications.

Figure G-2 *Centris Wash Option*

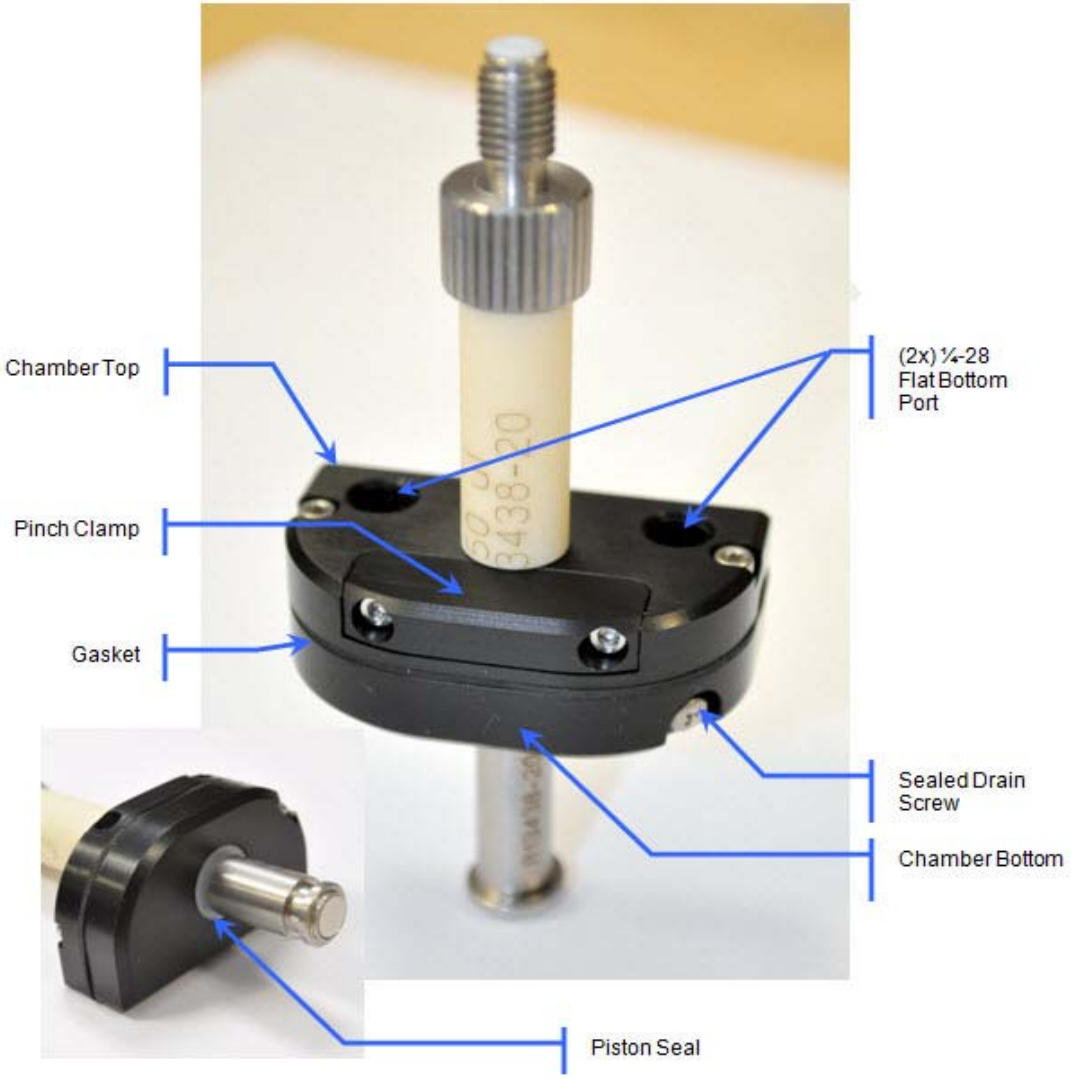

Note: *You can configure the input and output connections as you like. There is no need to use one side for input and the other for output.*

G.2 Using the Wash Option

You can configure the wash option in several ways to meet your application requirements. Following are some common Wash Option-pump configurations:

- **External Pump:** You can plumb the Wash Option to an external wash pump to periodically flush the wash fluid.
- **Using the Centris pump**: Directly fill and flush the Wash Option using the Centris pump.
- **Hand fill:** You can manually fill and flush the wash basin and plug the input and output ports.

G.2.1 Flow-Through with an External Wash Pump

You can connect Wash Options together in a single or multiple daisy-chain configuration with an external pump. For example, pumping the water for 15 seconds every 4 to 6 hours will maintain a fresh supply of wash fluid.

To configure an external pump with the Wash Option:

1. Arrange the external pump adjacent to the Centris pumps with Wash Options.
2. Connect tubing so that liquid from the source bottle of wash fluid flows through the external pump and to the Wash Option(s).
3. Connect the output tubing from the last Wash Option back to the source bottle.

Figure G-3 *Three Centris pumps with Wash Options, configured with an external pump*

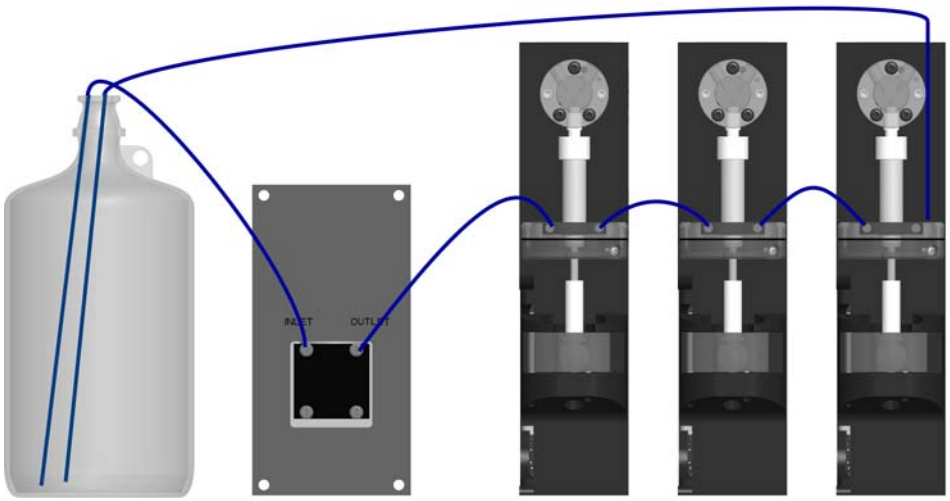

Note: *The design of the Wash Option supports placement of pumps side-by-side in a multi-pump configuration. Take care to avoid kinked tubing between neighboring pumps.*

Note: *The Wash Option can withstand pressure up to 4.5 psi. Selection and integration of an external wash pump should not exceed this limit. One suitable solution is the Cavro MiniWash pump, which produces approximately 3psi when plumbed with 1/8" flexible tubing. The Cavro MiniWash pump can be externally controlled or directly controlled by the Centris pump though the use of auxiliary digital outputs.*

G.2.2 Flow-Through using Centris Pump Mechanism

Instead of using an external pump, you can use the Centris pump mechanism and valve to flush the wash fluid. If your valve configuration has more than 2 ports, you can use one of the ports to connect the wash fluid through the wash option. In this way, using the Centris pump commands, system liquid can be aspirated into the syringe and then slowly dispensed through the Wash Option(s) to flush the fluid reservoir. If the system liquid is not appropriate as the wash fluid, such as saline buffer or sticky compounds, a wash fluid source bottle can be plumbed to the Centris valve and flushed through the Wash Option(s) and recirculated.

To configure a Centris pump with the Wash Option:

1. Connect tubing from one of the ports on the Centris port valve to the Wash Option's input port. Plumb multiple Wash Options together as necessary.
2. Connect the output tubing from the last Wash Option back to the Source bottle or to waste to avoid possible contamination of the system liquid.

Figure G-4 *Wash Option(s) configured to the Centris Pump*

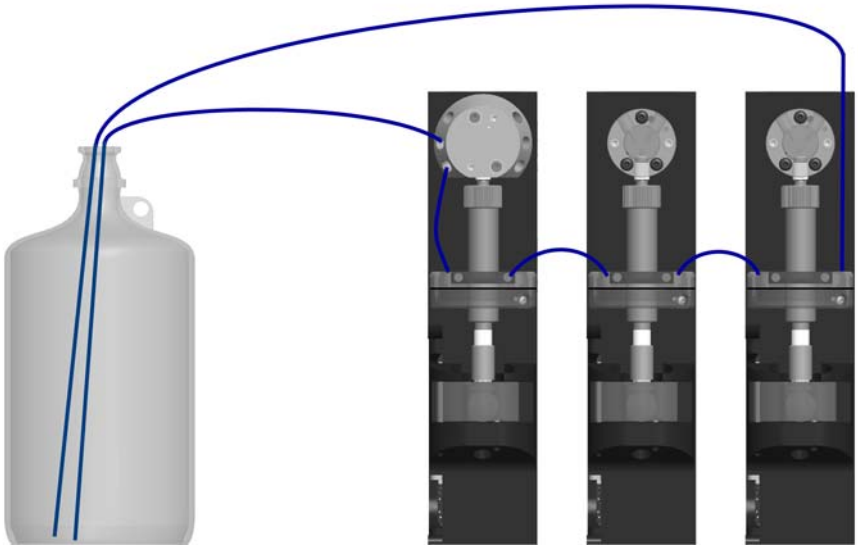

G.2.3 No-Flow Configuration

The Wash Option can be configured as a no-flow moisture reservoir where fluid is stored.

To configure the no-flow Wash Option:

1. Fill the reservoir with deionized water using a hand pipette or similar.
2. Plug the inlet and outlet ports to prevent evaporation.
3. Using the drain plug, drain or flush the Wash Option each week to prevent accumulation of salts or bacterial growth.
4. Fill with fresh wash fluid.

G.2.4 Centris Operation with a Wash Option

Note: The Centris ceramic syringes are retained by the self aligning magnetic coupling in the carriage assembly. This positions the piston during plunger moves. When operating a Centris pump with a Wash Option, the resistance of the Wash Option seal can cause the syringe piston to decouple from the magnet during aspiration. To ensure that the syringe piston recouples at the end of each aspiration, backlash compensation must be used (see Section 3.5.3, Set Commands). A setting of 2300 increments, [K2300], is suitable to ensure optimum Centris liquid-handling performance with the Wash Option. The backlash compensation setting can be set with each aspirate command string or stored to non-volatile memory using the [i] command (see Section 3.5.3, Set Commands).

G.3 Replacing the Wash Option

G.3.1 Removing the Wash Option

This procedure requires a set of metric-hex key wrenches.

To replace the Centris Wash Option:

1. If the Centris is connected to a controlling device, move the syringe to approximately mid-stroke.

   Or If the Centris is not connected to an instrument or controlling device, manually move the carriage to approximately the mid-stroke by turning the lead screw with a 2.5mm hex-key from below.

2 Using a 2mm hex-key wrench, loosen the two fasteners on the valve, shown in Figure G-5, 'Loosening Fasteners." Open the syringe retention clasp to free the syringe.

Figure G-5 *Loosening Fasteners.*

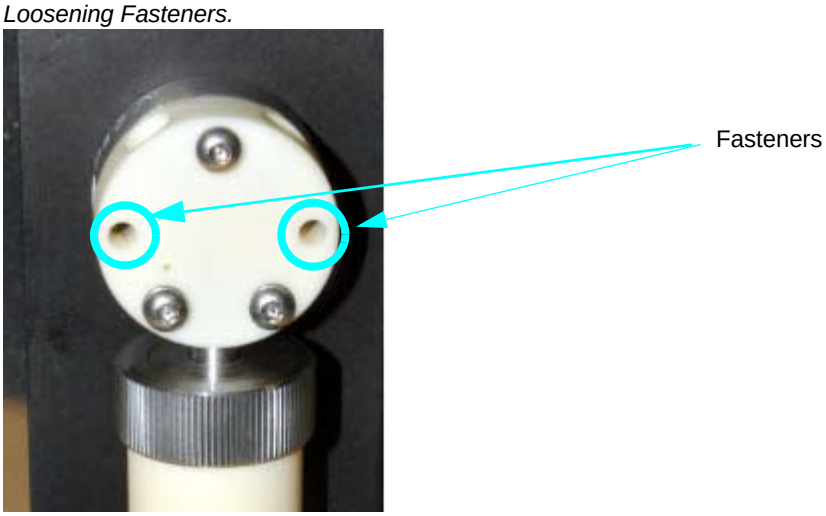

3 Remove the entire syringe and valve assembly as one unit.

Caution! *Take care not to touch the ceramic piston or to let the piston come fully out of the ceramic barrel or Wash Option. This might cause damage to the parts and impact performance.*

4 Remove the valve from the syringe assembly and set aside or clean, if necessary.

5 Install the valve into the new syringe with the Wash assembly.

Caution! *Do not over-tighten! If you over-tighten the syringe, the Teflon liner will deform into the stainless steel cap of the syringe, limiting the effectiveness of the seal.*

G.3.2 Aligning the Wash Option

After you have installed the syringe with the Wash Option, the valve and Wash Option might not be aligned. To align them:

1 Loosen both M2 screws on the front of the Wash Option and pinch clamp.

Figure G-6 *M2 Screws*

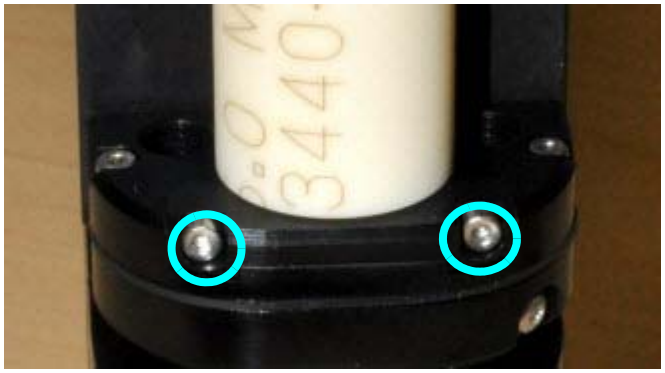

2 Holding the syringe barrel, rotate the Wash Option about the ceramic barrel until the back surfaces of the Wash Option are aligned.

Figure G-7 *Alignment of the Wash Option*

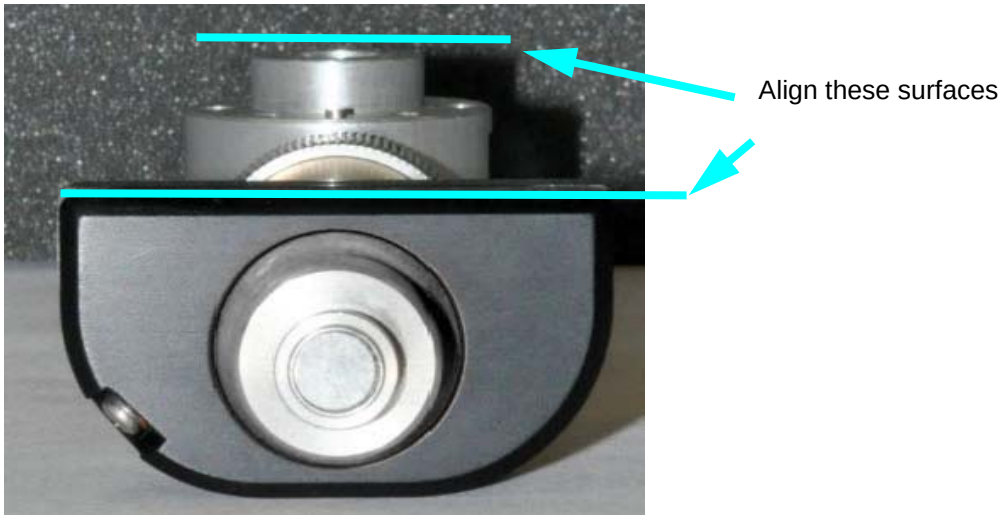

G.3.3 Installing the Assembly

After you have aligned the syringe and valve assembly, you can install it on the pump.

To install the syringe and valve assembly:

1 Hold the assembly by the valve.

2 Extend the plunger down to the ball coupling so that it is completely engaged.

3 Install the unit onto the pump using the valve interface as the main source of alignment.

Note: *you might have to manually rotate the motor shaft to be able to insert the valve.*

4 Tighten the fasteners so that they are finger-tight so that the unit is attached but can still manipulated.

Figure G-8 *Vertical Aligning the Centris Pump*

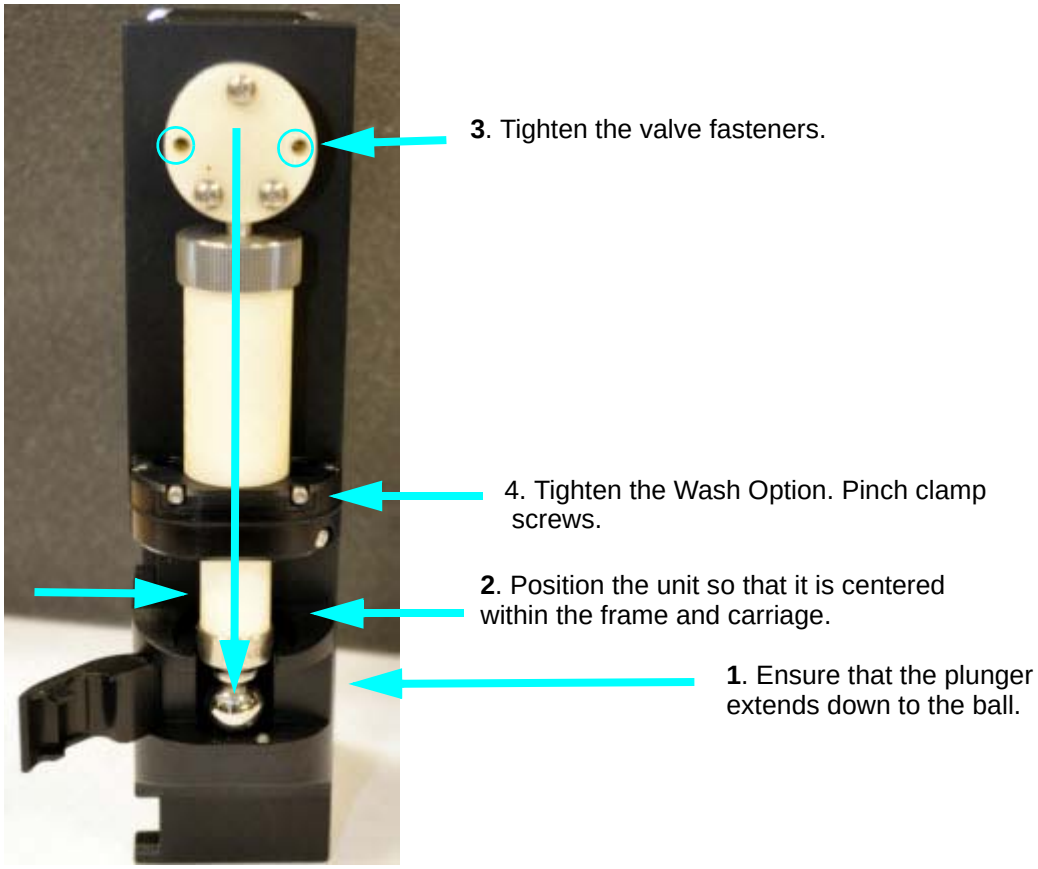

5 After verifying alignment of the valve, syringe, and Wash Option, tighten the valve and Wash Option screws to lock them into place.

Note: *Before closing the clasp lock, check to make sure that the syringe piston is in contact with the steel ball, and that the ball is in contact with the carriage.*

G.4 Maintaining the Wash Option

The Centris Wash Option seal and assembly are specified to last more than 1 million cycles. To ensure correct performance, the Wash Option should be periodically checked for leakage or evidence of salts or other contamination. If any issues are found, the Wash Option can be wiped clean or serviced with a spares kit.

G.4.1 Cleaning the Wash Option

To clean external surfaces of any salts or contamination, you can wipe the wash option with deionized water, buffered saline, water with a 10% bleach solution, or Sporicidin brand spray disinfectant.

G.4.2 Servicing the Wash Option

In the event that the Wash Option leaks or otherwise needs service, a spares kit is available for purchase (see Appendix A). This kit includes the chamber bottom, gasket, sealed drain screw, piston seal, as well as installation instructions.

G.5 Material Specifications

Table G-1 *Centris Wash Option Material Specifications*

Part	Description
Chamber top	Mat'l = 6061 T6 Aluminum Coating = Per MIL-A-8625F, TYPE II, CLASS 2, BLACK, NICKEL ACETATE SEAL. (Compatible with 10% Sodium Hypochlorite)
2x) ¼-28 Flat Bottom Port	Compatible with ¼-28 fittings for flat bottom sealing, that is. barbed, Upchurch w/ferrule, Omnifit w/ferrule, thermally flared tubing and fittings. Port depth 3.5mm (minimum).
Pinch clamp	Mat'l = 6061 T6 Aluminum Coating = Per MIL-A-8625F, TYPE II, CLASS 2, BLACK, NICKEL ACETATE SEAL. (Compatible with 10% Sodium Hypochlorite)
Gasket	Mat'l = BLK Viton® 75 Durometer
Chamber bottom	Mat'l = 6061 T6 Aluminum Coating = Per MIL-A-8625F, TYPE II, CLASS 2, BLACK, NICKEL ACETATE SEAL. (Compatible with 10% Sodium Hypochlorite)
Piston Seal	Seal Jacket Mat'l = MF4 (proprietary PTFE blend) Retaining Ring Mat'l = 300 series stainless steel. Canted Spring Mat'l = 300 series stainless steel

Specifications listed here are subject to change without notice.

Index

Symbols

report commands
- ?1 3-55

(Report start speed) 3-55

A

accuracy, determining 5-3
address switch
- overview 2-9
- setting 2-9

addressing scheme 3-1
air gap 4-1
answer frame format 3-17
ASCII codes for U.S. characters C-1
aspirate/dispense
- checking 4-5
- tubing 4-1

auxiliary inputs and outputs 2-10

B

backlash
- compensation setting 4-6
- definition 4-1

backpressure 4-1
baud rate configuration 2-9
breakoff 4-1
breakup 4-1

C

cabling
- about 2-2
- CAN diagram 2-8
- pin assignments 2-2
- RS-232 diagram 2-6
- RS-485 diagram 2-7

CAN communication protocol
- about 3-3
- action command 3-18
- common commands 3-19
- constructing messages 3-11
- frame types 3-13
- host to pump exchanges 3-17
- messages 3-11
- multi-frame command 3-19
- on-the-fly commands 3-13
- overview 3-11
- pump boot requests 3-15
- query command 3-20
- report command 3-20
- summary of commands F-1

CAN interface
- cabling diagram 2-8
- overview 2-5

carryover 4-1
cavitation 4-2
CE mark 1-2
Centris
- features 1-3
- functional description 1-4
- overview 1-1
- setting up 1-10

chemical compatibility, checking 4-3
Coefficient of Variation percentage 5-4
commands
- configuration 2-9
- control 3-48, E-6
- EEPROM E-6
- execution guidelines 3-21
- initialization 3-25, E-2
- non-volatile memory 3-51, E-6
- plunger movement 3-37, E-4
- pump configuration 3-22, E-2
- query status 3-60
- quick reference guide E-1
- report 3-54, E-7
- set (speed and acceleration) . . 3-39, E-4
- string example 3-49
- syntax 3-22
- using 3-21
- valve 3-29, E-3

communications
- checking 4-4
- interfaces 1-8, 2-4, 3-1
- protocols 3-3

configuration commands 2-9
control commands
- g (Mark start of repeat sequence) . . 3-48
- G (Repeat command sequence) . . . 3-48
- H (Halt command execution) 3-49
- list of E-6
- M (Delay command execution) 3-49
- R (Execute command) 3-48

T (Terminate command) 3-50–3-51
X (Execute last command or string) . 3-48
cutoff speed definition. 4-3

D
DA-15 connector pin assignments. 2-3
device status, determining. 3-2
dilution effect 4-2
dispense tubing, replacing. 5-4
distribution valves 3-29
DT protocol
answer block characters 3-9
command block characters. 3-9
parameters and settings 3-8
with Windows 3-10

E
EEPROM commands E-6
error codes
about. 3-60
ACSII and hex valueist 3-62
using 3-61
ESD considerations 1-4
evaluation software A-3
external connectors 1-8

F
frames
about. 3-11
CAN responses 3-15
type 0 3-13
type 1 3-13
type 2 3-14
type 3 3-14
type 4 3-14
type 5 3-14
type 6 3-14

G
glossary. 4-1

H
heartbeat messages. 3-15
hexadecimal addressing scheme
about. 3-1
in ASCII 3-2

I
initialization
forces 3-25
optimizing performance. 4-5
initialization commands
3-port and T-valve 3-25
list of. E-2
W (Initialize plunger drive) 3-27
w (Initialize valve drive). 3-28
Y (Initialize plunger & valve drive CCW) 3-26
Z (Initialize plunger & valve drive CW) 3-25
z (Simulated plunger initialization) . . 3-28
inner diameter 4-2
interconnect tubing A-4

M
maintenance
10% bleach cleaning 5-2
daily 5-1
periodic 5-3
weak acid-base-sequence cleaning . . 5-2
weak detergent cleaning 5-1
weekly. 5-1
mating connectors. A-5
message identifier (MID). 3-11
miscellaneous parts. A-3
mounting. 2-11
move calculations B-2
multiple frame types 3-18
multi-pump configurations. 1-9

N
non-distribution valves 3-29
non-volatile memory
configuration. 2-9
linking program strings 3-54
non-volatile memory commands
e (Execute string in NVM) 3-53
list of. E-6
s (Load string into NVM) 3-52
U30 (Set run from NVM auto mode). 3-53
U31 (Clear run from NVM). 3-53

O
OEM communication protocol
answer block characters 3-7
command block characters 3-4

overview 3-3
on-the-fly commands 3-13
optimizing performance 4-3, 4-7

P

part numbers
DA-15 mating connectors A-5
evaluation software A-3
interconnect tubing. A-4
miscellaneous. A-3
printed circuit board assemblies A-3
syringes. A-1–A-2
valves A-2
physical specifications D-1, G-1
plunger movement
constant speed 3-39
ramping down 3-39
ramping up. 3-39
top speed. 3-39
plunger movement commands
A (Absolute position) 3-38
D (Relative dispense) 3-39
list of. E-4
P (Relative pickup). 3-38
plunger time calculations B-1
power supply
choosing 2-1
integrating 2-1
overview 2-1
requirements 2-1
switching 2-2
precision 5-3
priming 4-2
printed circuit assembly
connectors 1-8
overview 1-7
part numbers A-3
replacing 5-9
program strings in non-volatile memory . 3-54
pump
checking communications 4-4
connection 4-4
initializing. 4-5
status 3-60
pump configuration commands
list of. E-2
U (Write pump config to NVM) 3-22

Q

quality control maintenance 5-3
query status command 3-60

R

reagent tubing
definition 4-2
replacing 5-4
regulatory considerations
about 1-2
radio interference 1-2
repeat flag. 3-5
report commands
? or ?0 (Report abs plunger position) 3-55
?2 (Report top speed) 3-55
?3 (Report cutoff speed) 3-55
?4 (Report actual plunger position) . 3-55
?6 (Report start speed). 3-56
?7 (Report top speed) 3-56
?8 (Report cutoff speed) 3-56
?9 (Report plunger drive ramp up) . 3-56
?10 (Report plunger drive ramp down) 3-56
?16 (Report plunger max range). . . 3-56
?17 (Report syringe volume) 3-56
?18 (Report plunger abs position). . 3-56
?20 (Report valve position) 3-56
?23 (Report device part number) . . 3-56
?29 (Report pump status byte). . . . 3-56
?30 (Report digital input #1 status) . 3-56
?31 (Report digital input #2 status) . 3-56
?36 (Report start speed). 3-56
?37 (Report top speed). 3-56
?38 (Report cutoff speed) 3-56
?40 (Report total op time) 3-56
?41 (Report # device power ups) . . 3-56
?42 (Report pump init absolute) . . . 3-56
?43 (Report pump inits since reset). 3-56
?44 (Report distance plunger mvmnt) 3-56
?45 (Report # plunger mvmnts abs) 3-56
?46 (Report # plunger mvmnts reset) 3-56
?47 (Report # valve mvmnts abs) . . 3-56
?48 (Report # valve mvmnts reset) . 3-56
?50 (Report voltage) 3-57
?51 (Report highest voltage) 3-57
?52 (Report lowest voltage). 3-57
?53 (Report temperature) 3-57
?54 (Report highest temperature) . . 3-57
?55 (Report lowest temperature) . . 3-57

?60 (Report # firmware downloads) . 3-57
?61 (Report firmware comp time). . . 3-57
?62 (Report firmware comp date) . . 3-57
?63 (Report firmware version). 3-57
?64 (Report firmware PN & rev) . . . 3-57
?65 (Report firmware checksum). . . 3-57
?67 (Report command buffer status) 3-57
?76 (Report ACSII pump config) . . . 3-57
?80..95 (Report command string) . . 3-57
?96 (Report self-test command string) 3-57
?99 (Report current command string) 3-57
list of E-7
RoHS compliance 1-3
RS-232 interface
cabling diagram 2-6
overview. 2-5
RS-485 interface
cabling diagram 2-7
overview. 2-5

S

safety 1-9
self-test 2-10
sequence number 3-5
set commands
C (Cutoff speed in increments) 3-43
c (Cutoff speed in pulses/sec). 3-46
interactions 3-47
L (Set slope) 3-40
list of E-4
S (Set speed) 3-44
v (Set start speed) 3-40
V (Set top speed) 3-41
slope
definition 4-3
spare parts. A-1
speed
changing on the fly 3-42
command relationships 3-47
start speed
definition 4-3
setting 4-5
symbol definitions B-1
syntax, command 3-22
syringe
components 1-5
handling 1-6
overview 1-5
part numbers A-1–A-2
plunger 1-5
priming 4-5
replacing 5-5
selecting size 4-4
sizes 1-5
speed profile. 4-2
system fluid 4-2

T

Tecan Systems, contacting 6-1
technical service 6-1
3-port valve components 1-7
top speed
definition 4-3
setting 4-5
tubing, selecting 4-4

U

unpacking 1-4

V

valve
components 1-7
configuration. 2-9
drive 1-6
overview 1-6
part numbers A-2
replacing 5-9
type 3-29
valve commands
B (Move valve to bypass) 3-32
E (Move valve to extra position) . . . 3-32
I (Move valve clockwise to port n) . . 3-32
I (Move valve to input position) 3-31
list of. E-3
O (Move valve CCW to port n) 3-32
O (Move valve to output position) . . 3-32
valve positions
3-port distribution valve. 3-31
3-port valve 3-30
4-port valve 3-33
6-port distribution valve. 3-35
9-port distribution valve. 3-36
volume calculations 4-3

W

warning symbols 1-9
wiring 2-2

This page has been intentionally left blank.