CS 61C:
Great Ideas in Computer Architecture

Lecture 12: *Control & Operating Speed*

Krste Asanović & Randy Katz

http://inst.eecs.berkeley.edu/~cs61c/fa17

Agenda

- **Finish Single-Cycle RISC-V Datapath**
- Controller
- Instruction Timing
- Performance Measures
- Introduction to Pipelining
- Pipelined RISC-V Datapath
- And in Conclusion, ...

Recap: Adding branches to datapath

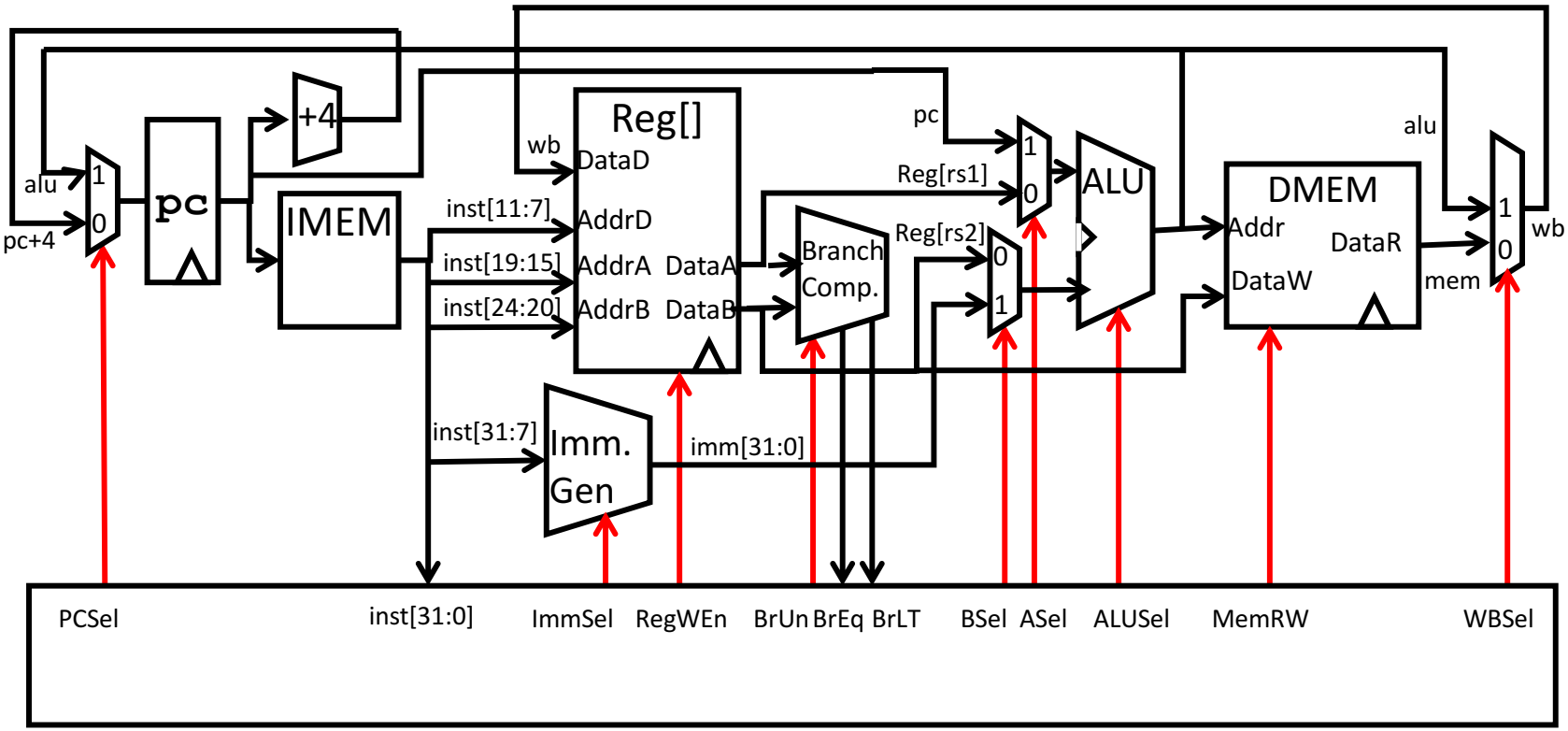

Implementing **JALR** Instruction (I-Format)

31 – 20	19 – 15	14 – 12	11 – 7	6 – 0
imm[11:0]	rs1	funct3	rd	opcode
12	5	3	5	7
offset[11:0]	base	0	dest	JALR

- JALR rd, rs, immediate
  - Writes PC+4 to Reg[rd] (return address)
  - Sets PC = Reg[rs1] + immediate
  - Uses same immediates as arithmetic and loads
    - ***no*** multiplication by 2 bytes

Adding **jalr** to datapath

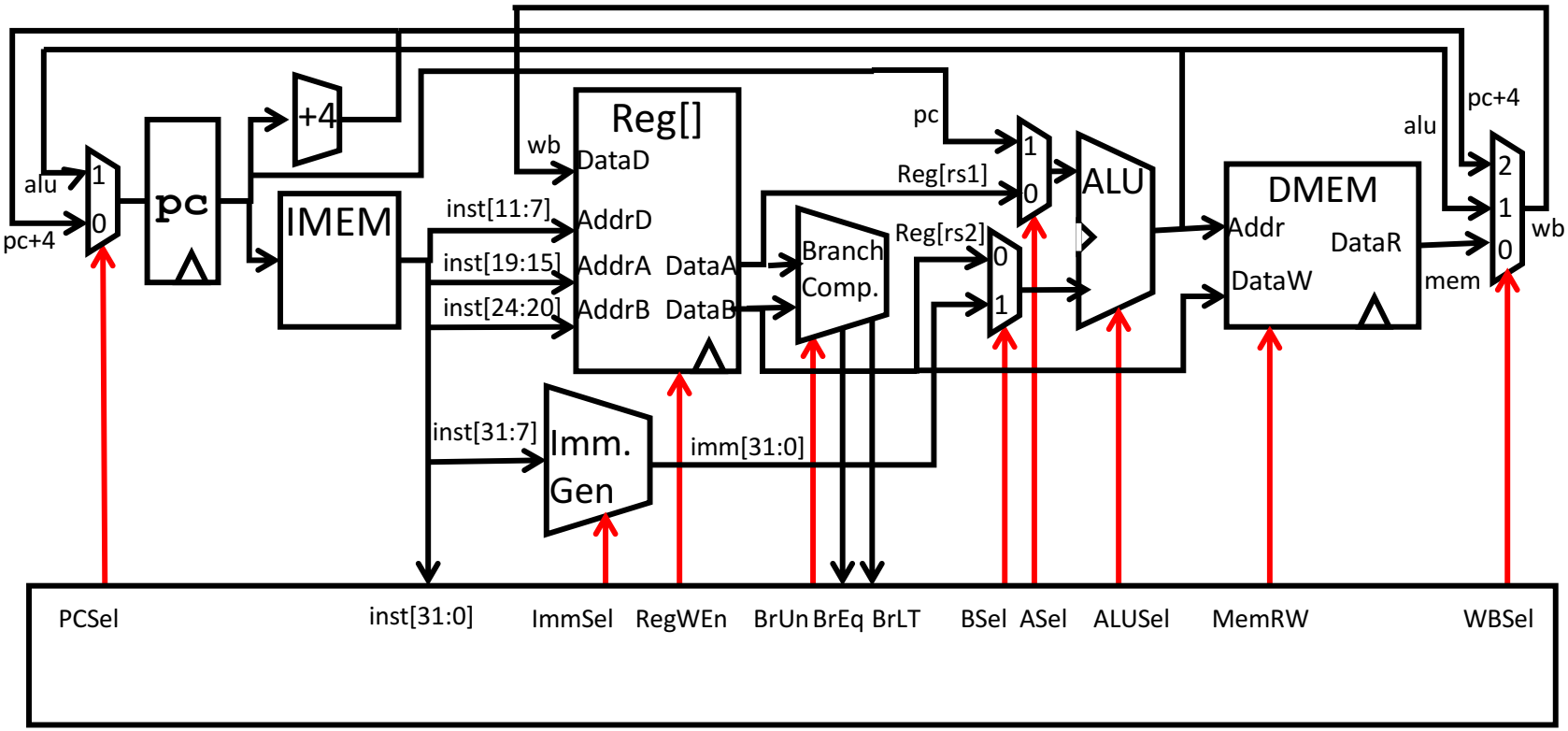

Adding **jalr** to datapath

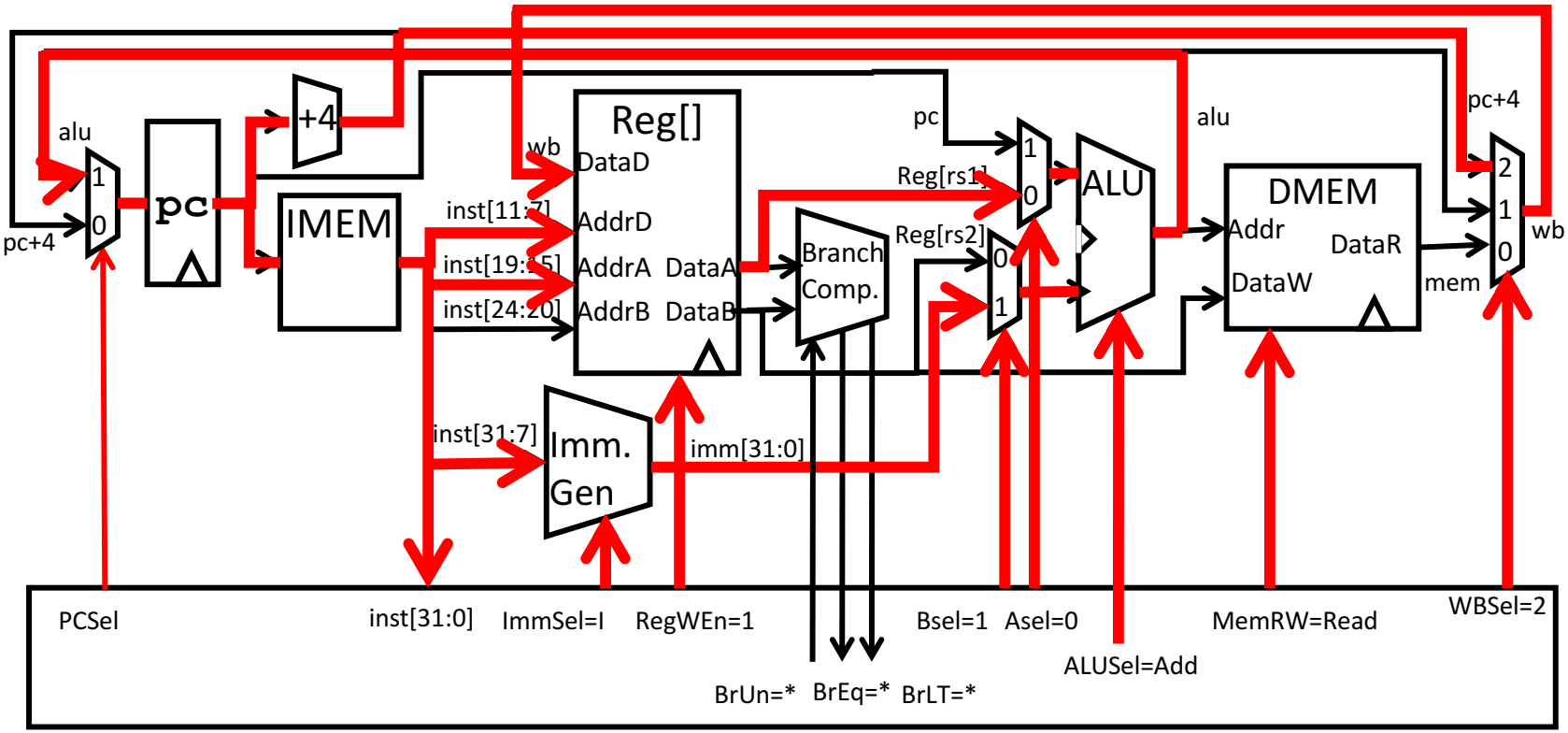

Implementing `jal` Instruction

31	30 … 21	20	19 … 12	11 … 7	6 … 0
imm[20]	imm[10:1]	imm[11]	imm[19:12]	rd	opcode
1	10	1	8	5	7
	offset[20:1]			dest	JAL

- JAL saves PC+4 in Reg[rd] (the return address)
- Set PC = PC + offset (PC-relative jump)
- Target somewhere within $\pm 2^{19}$ locations, 2 bytes apart
  - $\pm 2^{18}$ 32-bit instructions
- Immediate encoding optimized similarly to branch instruction to reduce hardware cost

Adding **jal** to datapath

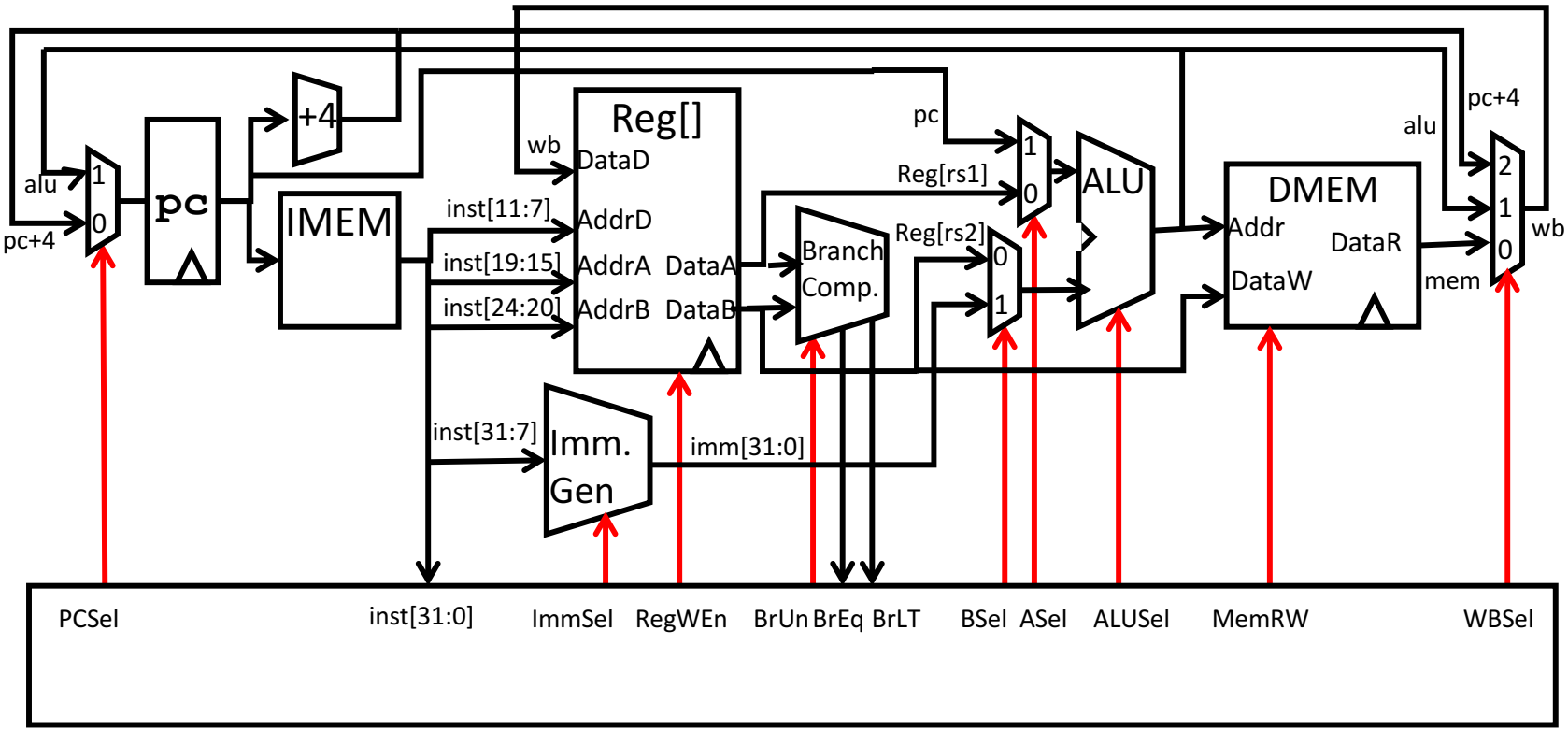

Adding **jal** to datapath

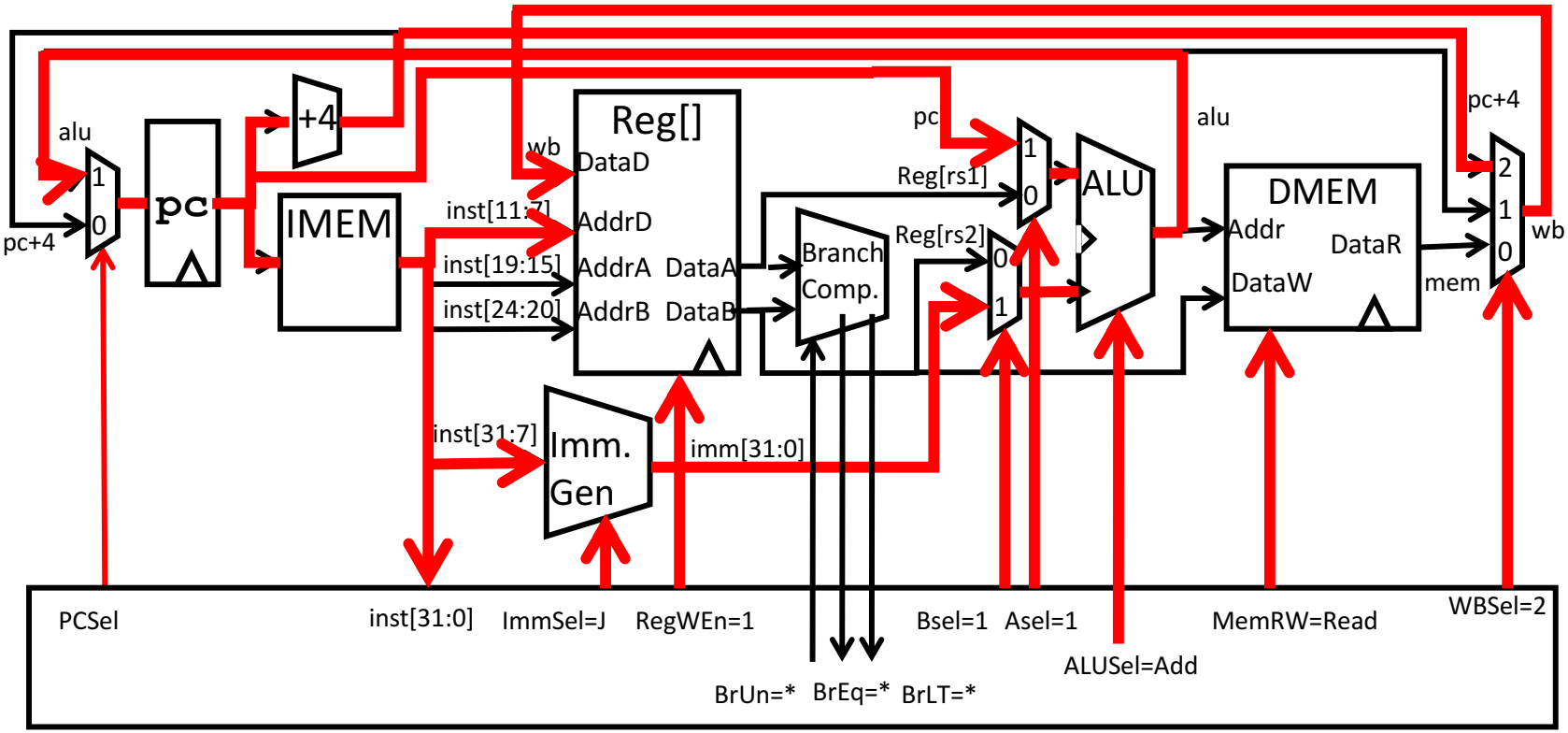

“Upper Immediate” instructions

31 … 12	11 … 7	6 … 0
imm[31:12]	rd	opcode
20	5	7
U-immediate[31:12]	dest	LUI
U-immediate[31:12]	dest	AUIPC

- Has 20-bit immediate in upper 20 bits of 32-bit instruction word
- One destination register, rd
- Used for two instructions
  - LUI – Load Upper Immediate (add to zero)
  - AUIPC – Add Upper Immediate to PC

Implementing **lui**

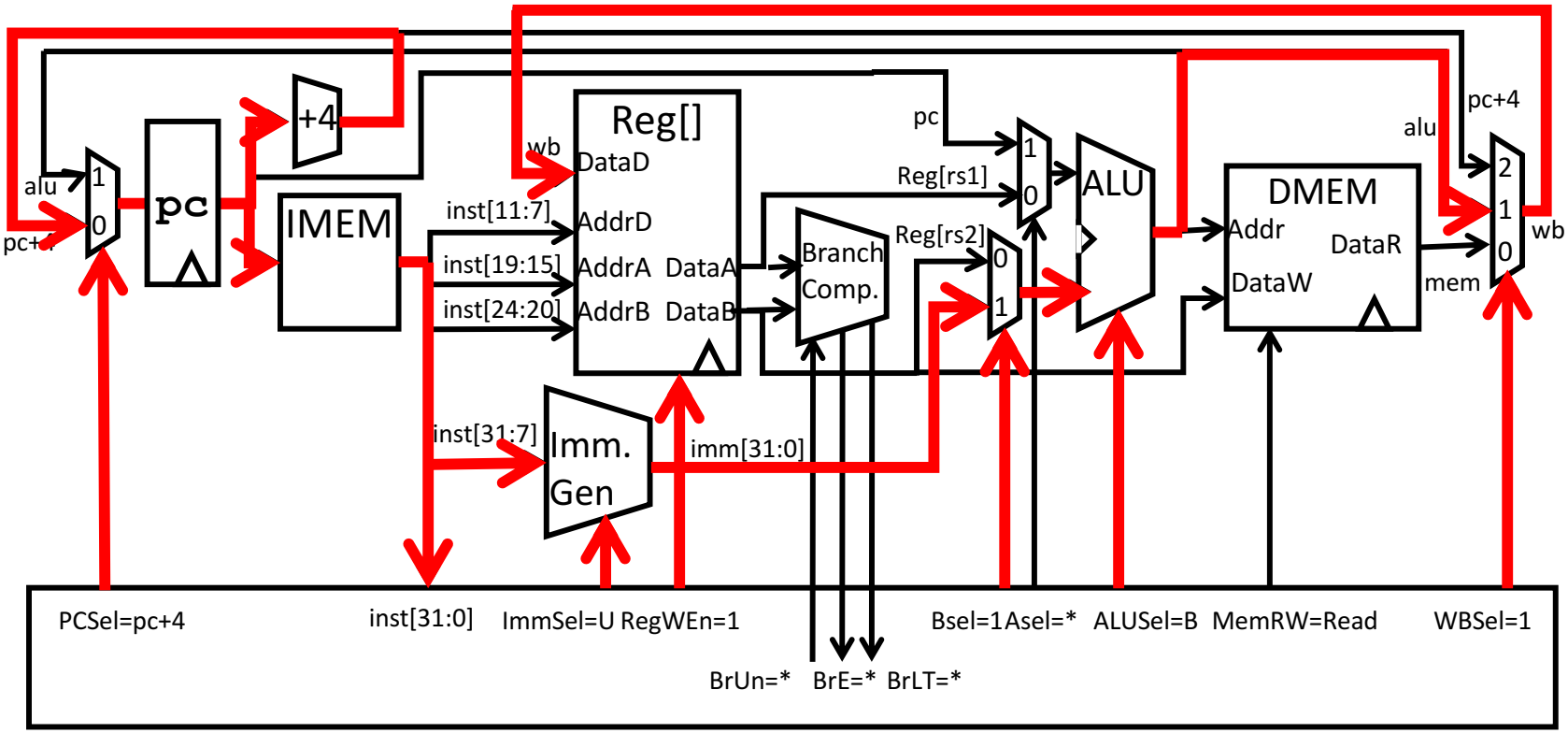

Implementing **auipc**

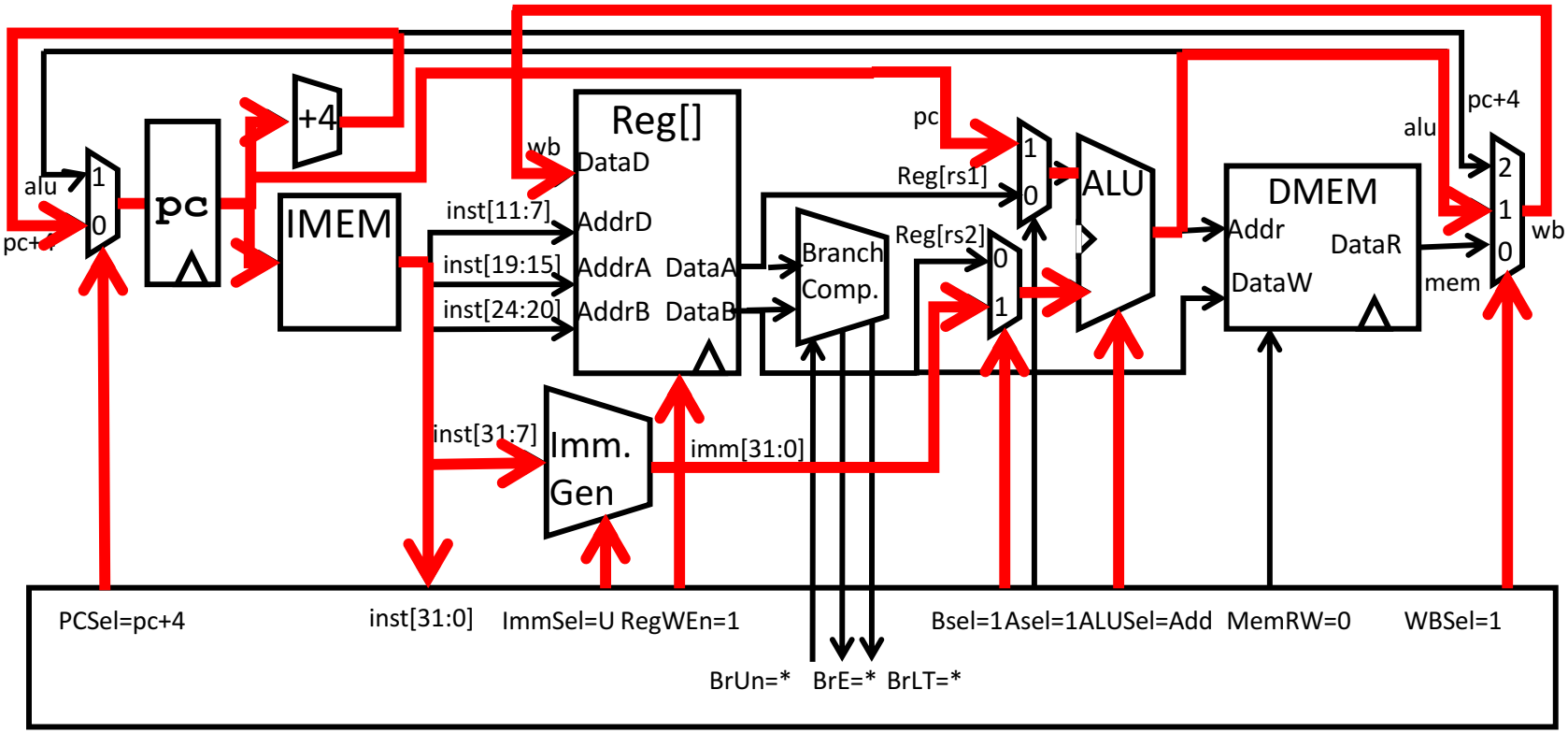

Recap: Complete RV32I ISA

imm[31:12]				rd	0110111	LUI
imm[31:12]				rd	0010111	AUIPC
imm[20|10:1|11|19:12]				rd	1101111	JAL
imm[11:0]		rs1	000	rd	1100111	JALR
imm[12|10:5]	rs2	rs1	000	imm[4:1|11]	1100011	BEQ
imm[12|10:5]	rs2	rs1	001	imm[4:1|11]	1100011	BNE
imm[12|10:5]	rs2	rs1	100	imm[4:1|11]	1100011	BLT
imm[12|10:5]	rs2	rs1	101	imm[4:1|11]	1100011	BGE
imm[12|10:5]	rs2	rs1	110	imm[4:1|11]	1100011	BLTU
imm[12|10:5]	rs2	rs1	111	imm[4:1|11]	1100011	BGEU
imm[11:0]		rs1	000	rd	0000011	LB
imm[11:0]		rs1	001	rd	0000011	LH
imm[11:0]		rs1	010	rd	0000011	LW
imm[11:0]		rs1	100	rd	0000011	LBU
imm[11:0]		rs1	101	rd	0000011	LHU
imm[11:5]	rs2	rs1	000	imm[4:0]	0100011	SB
imm[11:5]	rs2	rs1	001	imm[4:0]	0100011	SH
imm[11:5]	rs2	rs1	010	imm[4:0]	0100011	SW
imm[11:0]		rs1	000	rd	0010011	ADDI
imm[11:0]		rs1	010	rd	0010011	SLTI
imm[11:0]		rs1	011	rd	0010011	SLTIU
imm[11:0]		rs1	100	rd	0010011	XORI
imm[11:0]		rs1	110	rd	0010011	ORI
imm[11:0]		rs1	111	rd	0010011	ANDI

0000000	shamt	rs1	001	rd	0010011	SLLI
0000000	shamt	rs1	101	rd	0010011	SRLI
0100000	shamt	rs1	101	rd	0010011	SRAI
0000000	rs2	rs1	000	rd	0110011	ADD
0100000	rs2	rs1	000	rd	0110011	SUB
0000000	rs2	rs1	001	rd	0110011	SLL
0000000	rs2	rs1	010	rd	0110011	SLT
0000000	rs2	rs1	011	rd	0110011	SLTU
0000000	rs2	rs1	100	rd	0110011	XOR
0000000	rs2	rs1	101	rd	0110011	SRL
0100000	rs2	rs1	101	rd	0110011	SRA
0000000	rs2	rs1	110	rd	0110011	OR
0000000	rs2	rs1	111	rd	0110011	AND
0000	pred	succ	00000	000	00000	0001111	FENCE
0000	0000	0000	00000	001	00000	0001111	FENCE.I
000000000000			00000	000	00000	1110011	ECALL
000000000001			00000	000	00000	1110011	EBREAK
csr			rs1	001	rd	1110011	CSRRW
csr			rs1	010	rd	1110011	CSRRS
csr			rs1	011	rd	1110011	CSRRC
csr			zimm	101	rd	1110011	CSRRWI
csr			zimm	110	rd	1110011	CSRRSI
csr			zimm	111	rd	1110011	CSRRCI

Not in CS61C

RV32I has 47 instructions total
37 instructions covered in CS61C

Single-Cycle RISC-V RV32I Datapath

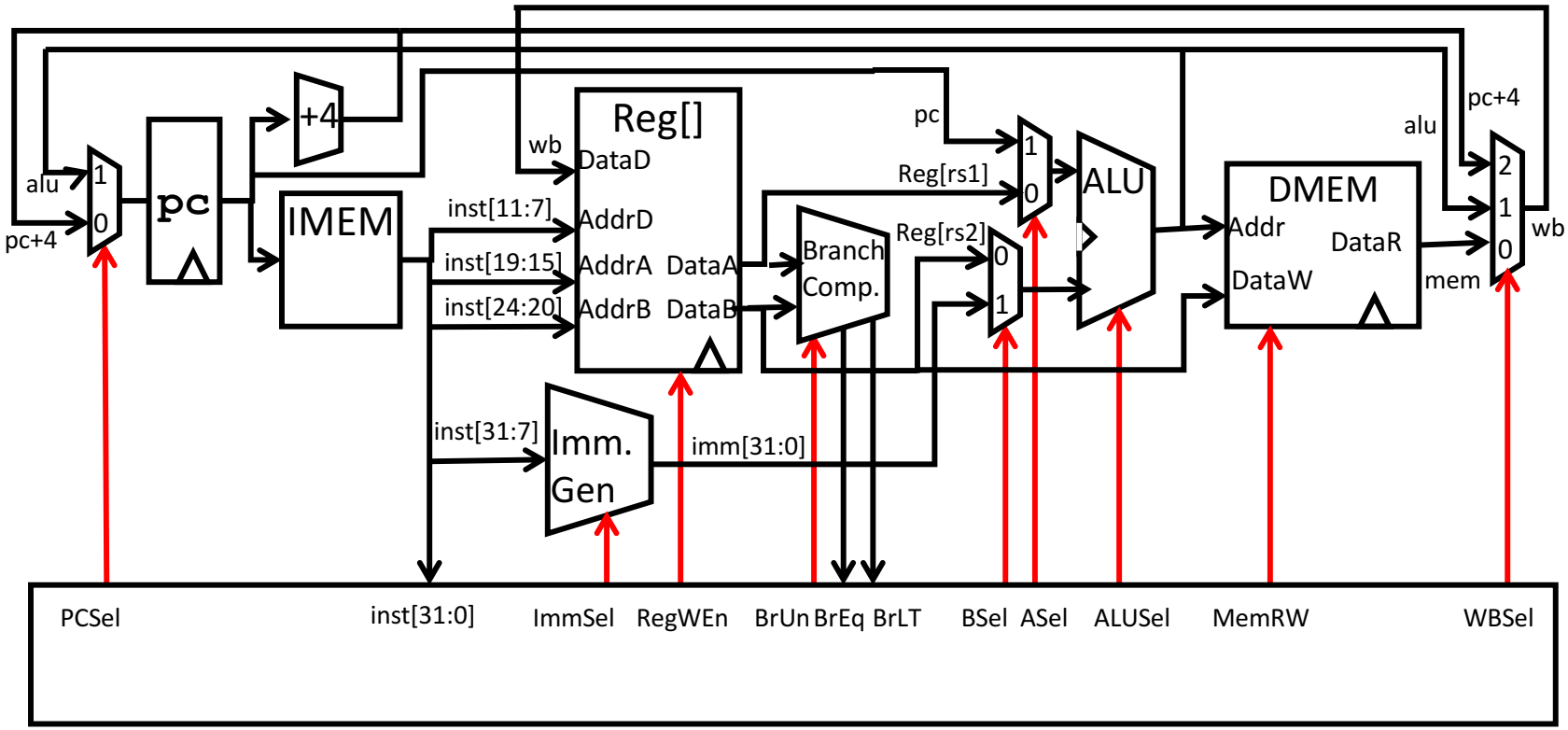

Agenda

- Finish Single-Cycle RISC-V Datapath
- **Controller**
- Instruction Timing
- Performance Measures
- Introduction to Pipelining
- Pipelined RISC-V Datapath
- And in Conclusion, ...

Processor

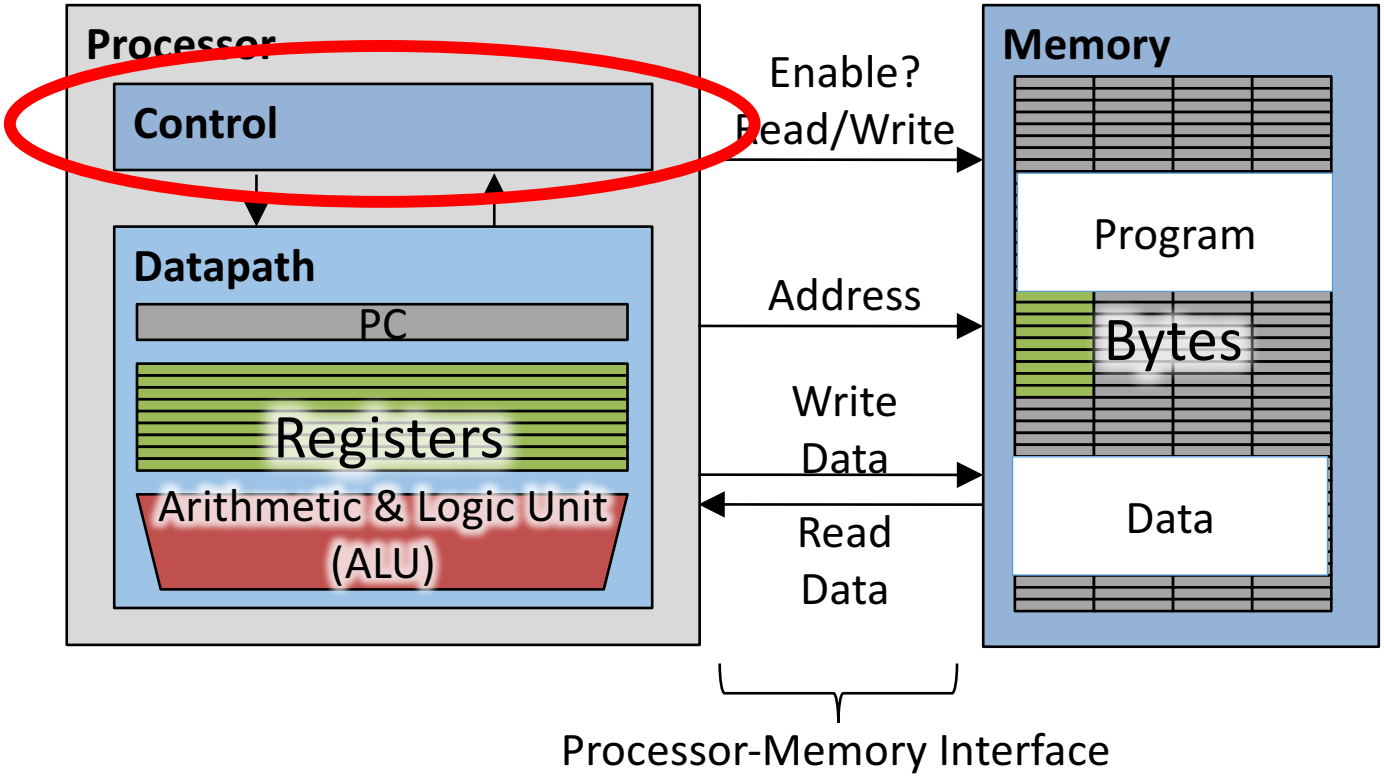
Processor
Control
Datapath
PC
Registers
Arithmetic & Logic Unit
(ALU)
Enable?
Read/Write
Address
Write
Data
Read
Data
Memory
Program
Bytes
Data
Processor-Memory Interface

Single-Cycle RISC-V RV32I Datapath

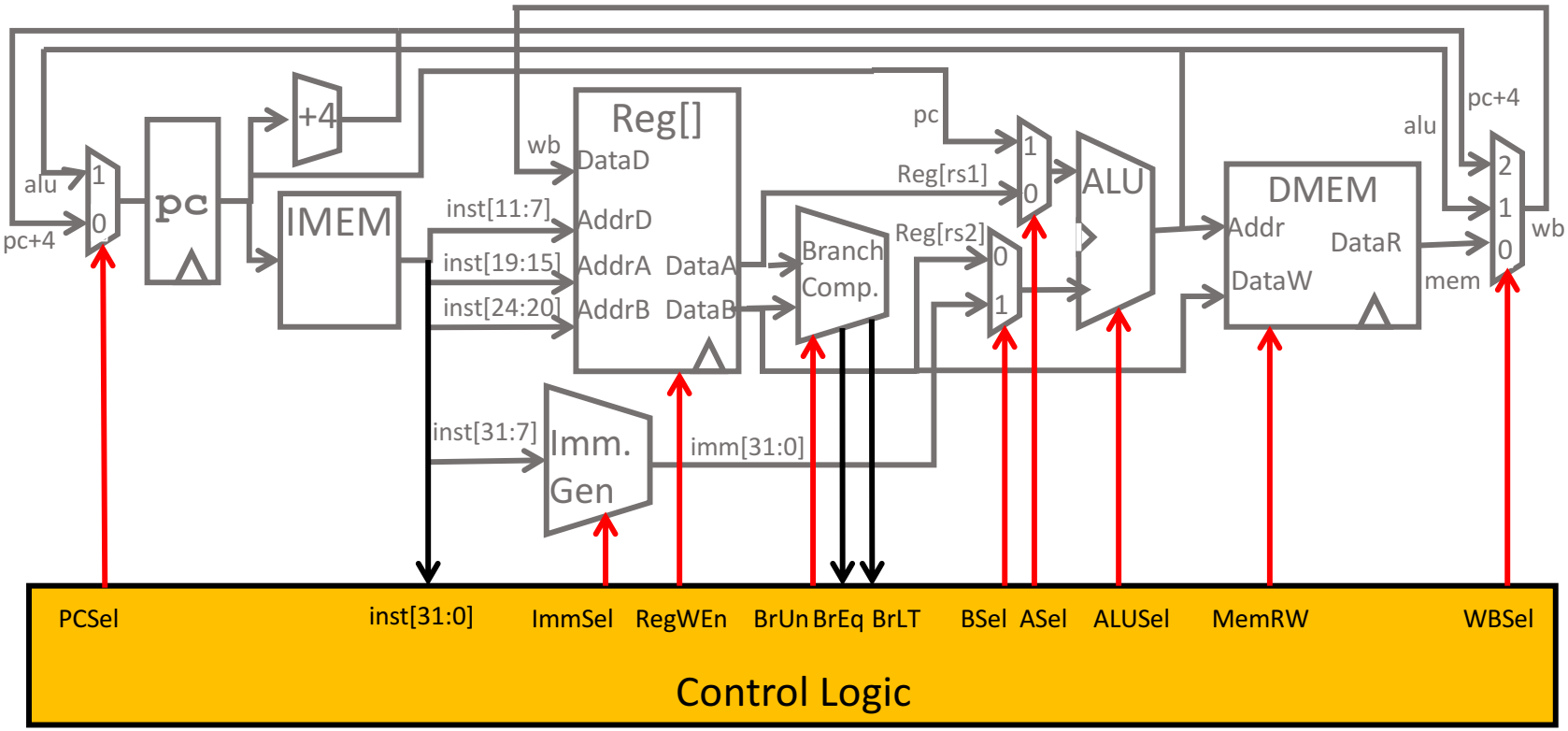

Control Logic Truth Table (incomplete)

Inst[31:0]	BrEq	BrLT	PCSel	ImmSel	BrUn	ASel	BSel	ALUSel	MemRW	RegWEn	WBSel
add	*	*	+4	*	*	Reg	Reg	Add	Read	1	ALU
sub	*	*	+4	*	*	Reg	Reg	Sub	Read	1	ALU
(R-R Op)	*	*	+4	*	*	Reg	Reg	*(Op)*	Read	1	ALU
addi	*	*	+4	I	*	Reg	Imm	Add	Read	1	ALU
lw	*	*	+4	I	*	Reg	Imm	Add	Read	1	Mem
sw	*	*	+4	S	*	Reg	Imm	Add	Write	0	*
beq	0	*	+4	B	*	PC	Imm	Add	Read	0	*
beq	1	*	ALU	B	*	PC	Imm	Add	Read	0	*
bne	0	*	ALU	B	*	PC	Imm	Add	Read	0	*
bne	1	*	+4	B	*	PC	Imm	Add	Read	0	*
blt	*	1	ALU	B	0	PC	Imm	Add	Read	0	*
bltu	*	1	ALU	B	1	PC	Imm	Add	Read	0	*
jalr	*	*	ALU	I	*	Reg	Imm	Add	Read	1	PC+4
jal	*	*	ALU	J	*	PC	Imm	Add	Read	1	PC+4
auipc	*	*	+4	U	*	PC	Imm	Add	Read	1	ALU

Control Realization Options

- ROM
  - "Read-Only Memory"
  - Regular structure
  - Can be easily reprogrammed
    - fix errors
    - add instructions
  - Popular when designing control logic manually
- Combinatorial Logic
  - Today, chip designers use logic synthesis tools to convert truth tables to networks of gates

RV32I, a nine-bit ISA!

inst[30] inst[14:12] inst[6:2]

imm[31:12]				rd	0110111	LUI
imm[31:12]				rd	0010111	AUIPC
imm[20|10:1|11|19:12]				rd	1101111	JAL
imm[11:0]		rs1	000	rd	1100111	JALR
imm[12|10:5]	rs2	rs1	000	imm[4:1|11]	1100011	BEQ
imm[12|10:5]	rs2	rs1	001	imm[4:1|11]	1100011	BNE
imm[12|10:5]	rs2	rs1	100	imm[4:1|11]	1100011	BLT
imm[12|10:5]	rs2	rs1	101	imm[4:1|11]	1100011	BGE
imm[12|10:5]	rs2	rs1	110	imm[4:1|11]	1100011	BLTU
imm[12|10:5]	rs2	rs1	111	imm[4:1|11]	1100011	BGEU
imm[11:0]		rs1	000	rd	0000011	LB
imm[11:0]		rs1	001	rd	0000011	LH
imm[11:0]		rs1	010	rd	0000011	LW
imm[11:0]		rs1	100	rd	0000011	LBU
imm[11:0]		rs1	101	rd	0000011	LHU
imm[11:5]	rs2	rs1	000	imm[4:0]	0100011	SB
imm[11:5]	rs2	rs1	001	imm[4:0]	0100011	SH
imm[11:5]	rs2	rs1	010	imm[4:0]	0100011	SW
imm[11:0]		rs1	000	rd	0010011	ADDI
imm[11:0]		rs1	010	rd	0010011	SLTI
imm[11:0]		rs1	011	rd	0010011	SLTIU
imm[11:0]		rs1	100	rd	0010011	XORI
imm[11:0]		rs1	110	rd	0010011	ORI
imm[11:0]		rs1	111	rd	0010011	ANDI

0000000	shamt	rs1	001	rd	0010011	SLLI
0000000	shamt	rs1	101	rd	0010011	SRLI
0100000	shamt	rs1	101	rd	0010011	SRAI
0000000	rs2	rs1	000	rd	0110011	ADD
0100000	rs2	rs1	000	rd	0110011	SUB
0000000	rs2	rs1	001	rd	0110011	SLL
0000000	rs2	rs1	010	rd	0110011	SLT
0000000	rs2	rs1	011	rd	0110011	SLTU
0000000	rs2	rs1	100	rd	0110011	XOR
0000000	rs2	rs1	101	rd	0110011	SRL
0100000	rs2	rs1	101	rd	0110011	SRA
0000000	rs2	rs1	110	rd	0110011	OR
0000000	rs2	rs1	111	rd	0110011	AND
0000 pred succ		00000	000	00000	0001111	FENCE
0000 0000 0000		00000	001	00000	0001111	FENCE.I
000000000000		00000	000	00000	1110011	ECALL
000000000001		00000	000	00000	1110011	EBREAK
csr		rs1	001	rd	1110011	CSRRW
csr		rs1	010	rd	1110011	CSRRS
csr		rs1	011	rd	1110011	CSRRC
csr		zimm	101	rd	1110011	CSRRWI
csr		zimm	110	rd	1110011	CSRRSI
csr		zimm	111	rd	1110011	CSRRCI

Not in CS61C

Instruction type encoded using only 9 bits
inst[30],inst[14:12], inst[6:2]

ROM-based Control

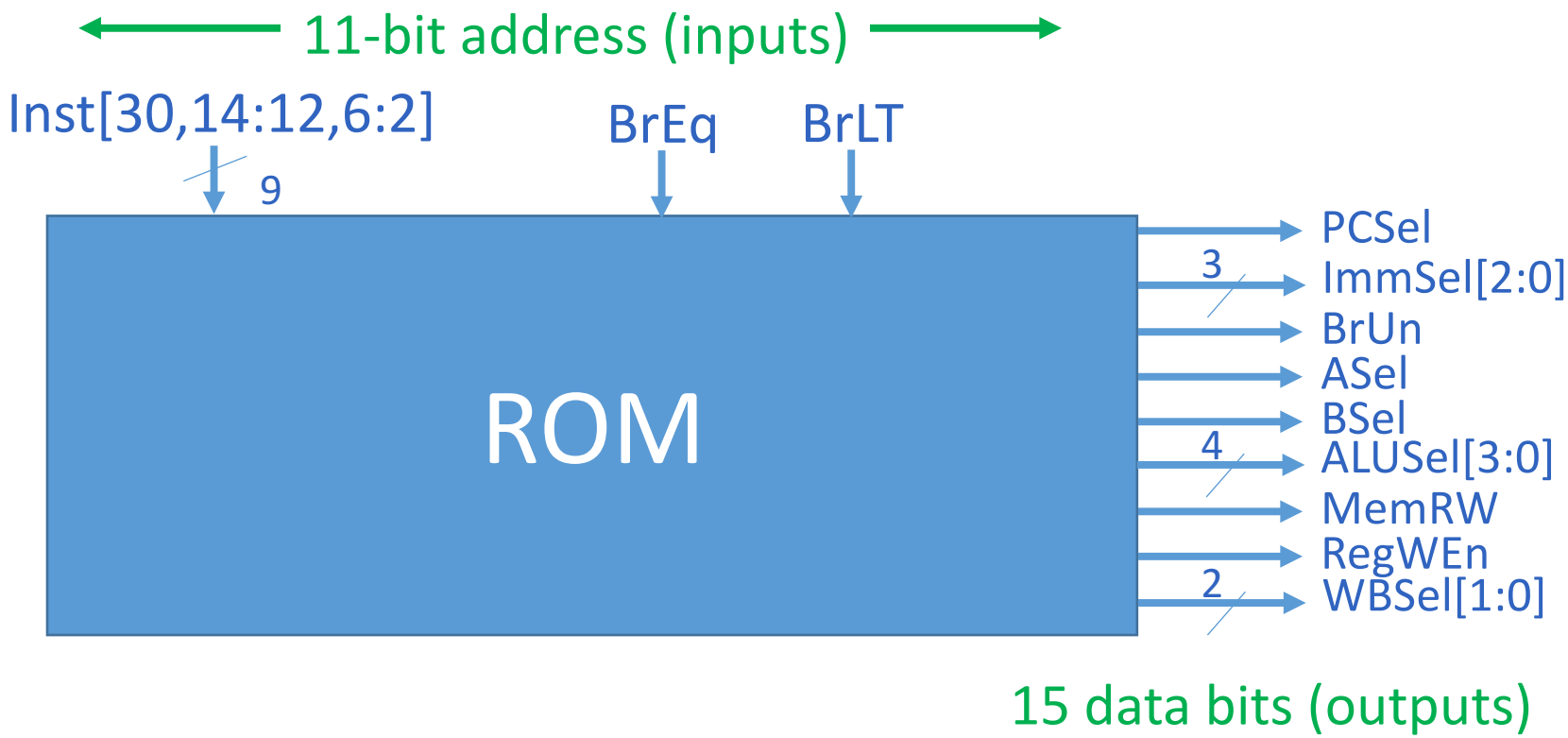

ROM Controller Implementation

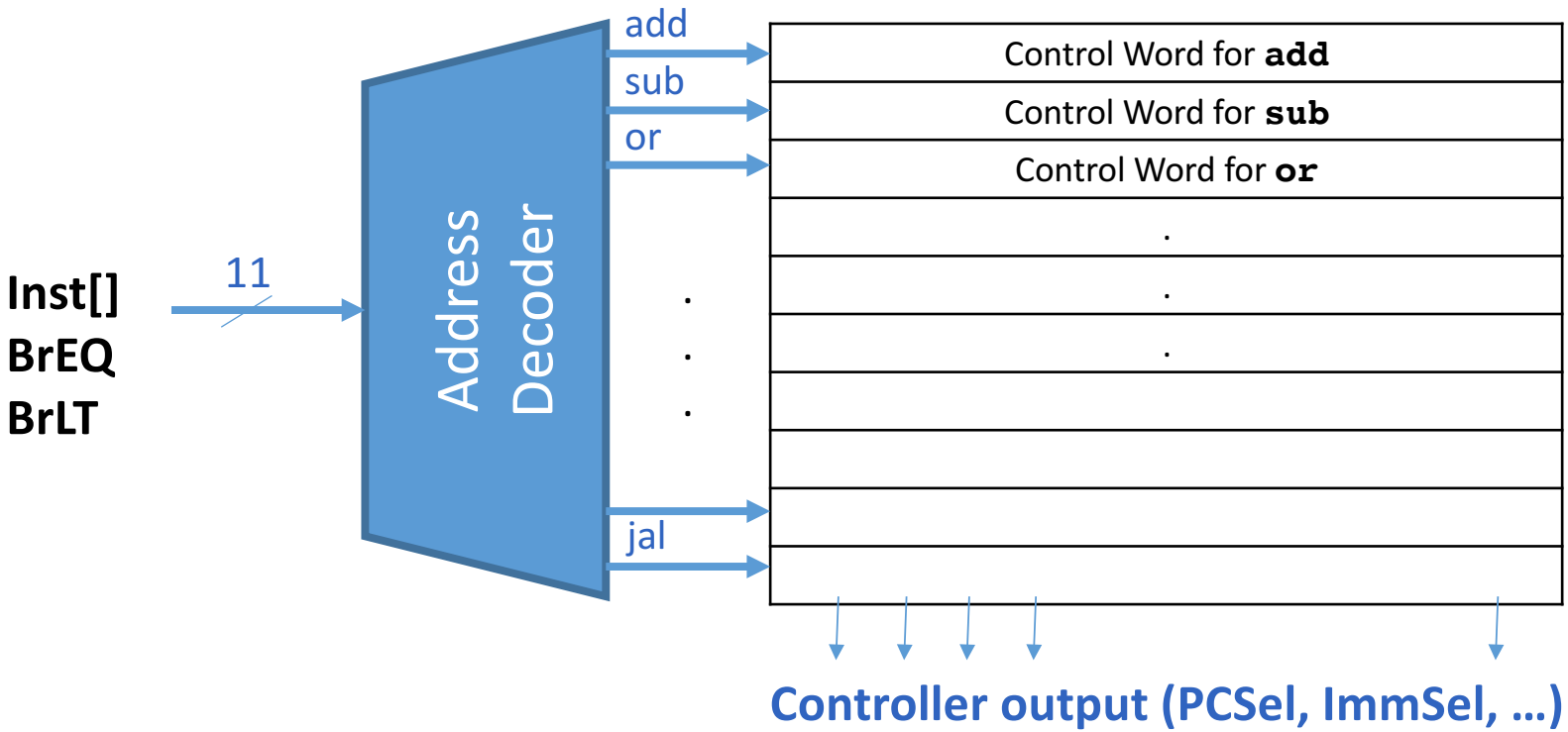

Administrivia

- Homework 2 Due tomorrow 11:59 pm
- Project 1 Part 1 Due Monday Oct. 9
  - Part 2 due Monday Oct. 16
- Midterm 1 Regrades due next Tuesday
  - Talk to a TA if you don't understand a midterm question or are unsure of a regrade

Break!

Agenda

- Finish Single-Cycle RISC-V Datapath
- Controller
- **Instruction Timing**
- Performance Measures
- Introduction to Pipelining
- Pipelined RISC-V Datapath
- And in Conclusion, ...

Instruction Timing

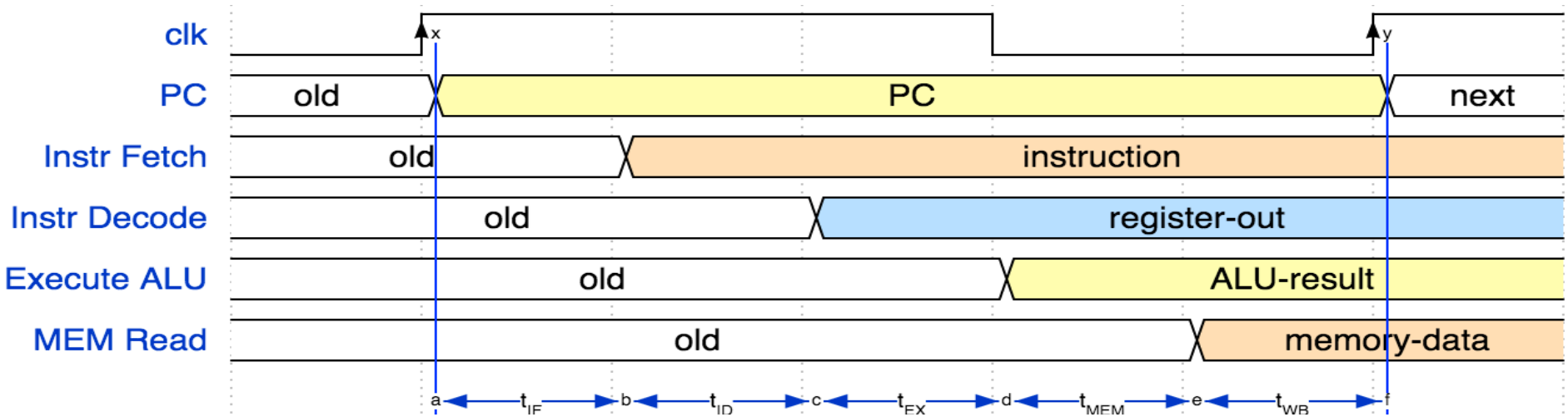

IF	ID	EX	MEM	WB	Total
I-MEM	Reg Read	ALU	D-MEM	Reg W	
200 ps	100 ps	200 ps	200 ps	100 ps	800 ps

Instruction Timing

Instr	IF = 200ps	ID = 100ps	ALU = 200ps	MEM=200ps	WB = 100ps	Total
add	X	X	X		X	600ps
beq	X	X	X			500ps
jal	X	X	X			500ps
lw	X	X	X	X	X	800ps
sw	X	X	X	X		700ps

- Maximum clock frequency
  - f_{max} = 1/800ps = 1.25 GHz
- Most blocks idle most of the time
  - E.g. $f_{max,ALU}$ = 1/200ps = 5 GHz!
  - How can we keep ALU busy all the time?
  - 5 billion adds/sec, rather than just 1.25 billion?
  - Idea: Factories use three employee shifts - equipment is always busy!

Agenda

- Finish Single-Cycle RISC-V Datapath
- Controller
- Instruction Timing
- **Performance Measures**
- Introduction to Pipelining
- Pipelined RISC-V Datapath
- And in Conclusion, ...

Performance Measures

- "Our" RISC-V executes instructions at 1.25 GHz
  - 1 instruction every 800 ps

- Can we improve its performance?
  - What do we mean with this statement?
  - Not so obvious:
    - Quicker response time, so one job finishes faster?
    - More jobs per unit time (e.g. web server returning pages)?
    - Longer battery life?

Transportation Analogy

	Sports Car	Bus
Passenger Capacity	2	50
Travel Speed	200 mph	50 mph
Gas Mileage	5 mpg	2 mpg

50 Mile trip:

	Sports Car	Bus
Travel Time	15 min	60 min
Time for 100 passengers	750 min	120 min
Gallons per passenger	5 gallons	0.5 gallons

Computer Analogy

Transportation	Computer
Trip Time	Program execution time: e.g. time to update display
Time for 100 passengers	Throughput: e.g. number of server requests handled per hour
Gallons per passenger	Energy per task*: e.g. how many movies you can watch per battery charge or energy bill for datacenter

* Note: power is not a good measure, since low-power CPU might run for a long time to complete one task consuming more energy than faster computer running at higher power for a shorter time

“Iron Law” of Processor Performance

$$\frac{\text{Time}}{\text{Program}} = \frac{\text{Instructions}}{\text{Program}} * \frac{\text{Cycles}}{\text{Instruction}} * \frac{\text{Time}}{\text{Cycle}}$$

Instructions per Program

Determined by

- Task
- Algorithm, e.g. $O(N^2)$ vs $O(N)$
- Programming language
- Compiler
- Instruction Set Architecture (ISA)

(Average) Clock cycles per Instruction

Determined by

- ISA
- Processor implementation (or *microarchitecture*)
- E.g. for "our" single-cycle RISC-V design, CPI = 1
- Complex instructions (e.g. **`strcpy`**), CPI >> 1
- Superscalar processors, CPI < 1 (next lecture)

Time per Cycle (1/Frequency)

Determined by

- Processor microarchitecture (determines critical path through logic gates)
- Technology (e.g. 14nm versus 28nm)
- Power budget (lower voltages reduce transistor speed)

Speed Tradeoff Example

- For some task (e.g. image compression) …

	Processor A	Processor B
# Instructions	1 Million	1.5 Million
Average CPI	2.5	1
Clock rate *f*	2.5 GHz	2 GHz
Execution time	1 ms	0.75 ms

Processor B is faster for this task, despite executing more instructions and having a lower clock rate!

Energy per Task

$$\frac{\text{Energy}}{\text{Program}} = \frac{\text{Instructions}}{\text{Program}} * \frac{\text{Energy}}{\text{Instruction}}$$

$$\frac{\text{Energy}}{\text{Program}} \alpha \frac{\text{Instructions}}{\text{Program}} * C \; V^2$$

"Capacitance" depends on
technology,
processor features
e.g. # of cores

Supply voltage,
e.g. 1V

Want to reduce capacitance and voltage to reduce energy/task

Energy Tradeoff Example

- "Next-generation" processor
  - C (Moore's Law): -15 %
  - Supply voltage, V_{sup}: -15 %
  - Energy consumption: $1 - (1-0.85)^3 = -39\ \%$

- Significantly improved energy efficiency thanks to
  - Moore's Law AND
  - Reduced supply voltage

Energy "Iron Law"

Performance = Power * Energy Efficiency

(Tasks/Second) (Joules/Second) (Tasks/Joule)

- Energy efficiency (e.g., instructions/Joule) is key metric in all computing devices
- For power-constrained systems (e.g., 20MW datacenter), need better energy efficiency to get more performance at same power
- For energy-constrained systems (e.g., 1W phone), need better energy efficiency to prolong battery life

End of Scaling

- In recent years, industry has not been able to reduce supply voltage much, as reducing it further would mean increasing "leakage power" where transistor switches don't fully turn off (more like dimmer switch than on-off switch)
- Also, size of transistors and hence capacitance, not shrinking as much as before between transistor generations
- Power becomes a growing concern – the "power wall"
- Cost-effective air-cooled chip limit around ~150W

Processor Trends

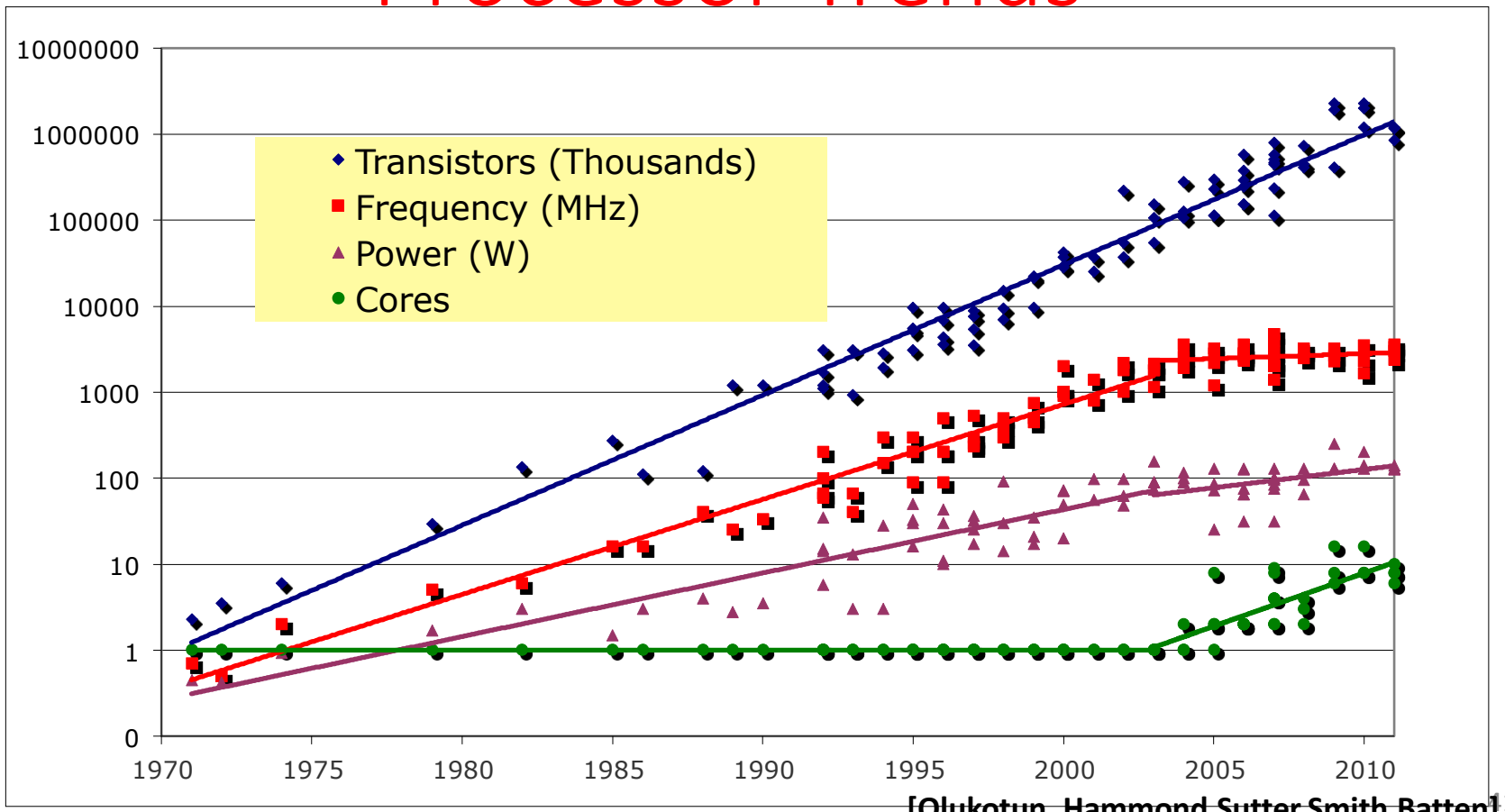

[Olukotun, Hammond,Sutter,Smith,Batten]

Break!

Agenda

- Finish Single-Cycle RISC-V Datapath
- Controller
- Instruction Timing
- Performance Measures
- **Introduction to Pipelining**
- Pipelined RISC-V Datapath
- And in Conclusion, ...

Pipelining

- A familiar example:
  - Getting a university degree

Year 1

Year 2

Year 3

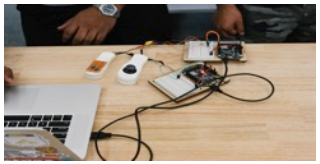

Year 4

- Shortage of Computer scientists (your startup is growing):
  - How long does it take to educate 16,000?

Computer Scientist Education

- Option 1: ***serial***

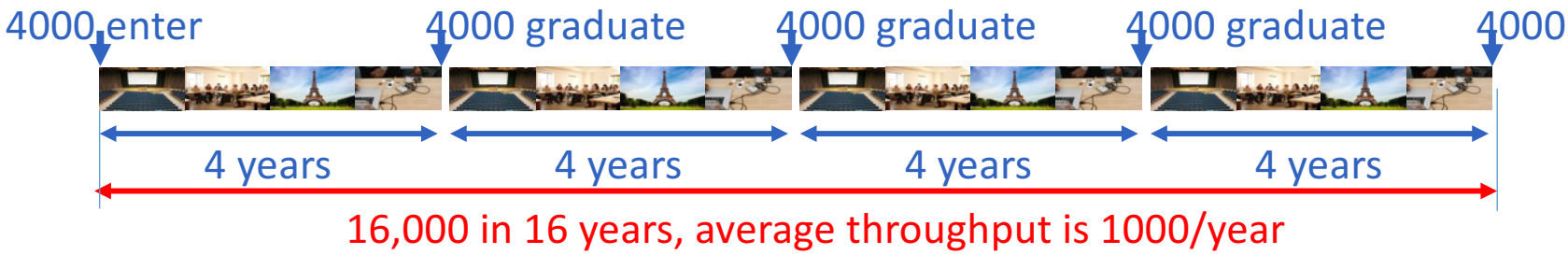

- Option 2: ***pipelining***

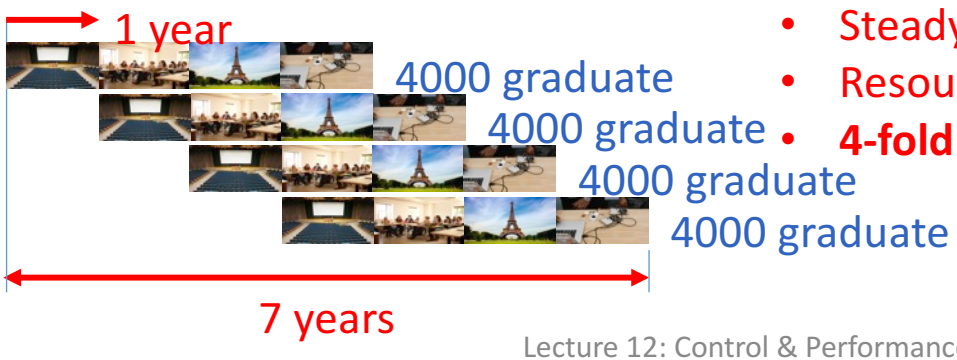

- 16,000 in 7 years
- Steady state throughput is 4000/year
- Resources used efficiently
- **4-fold improvement over serial education**

Latency versus Throughput

- Latency
  - Time from entering college to graduation
  - Serial 4 years
  - Pipelining 4 years
- Throughput
  - Average number of students graduating each year
  - Serial 1000
  - Pipelining 4000
- Pipelining
  - Increases throughput (4x in this example)
  - But does nothing to latency
    - sometimes worse (additional overhead e.g. for shift transition)

Simultaneous versus Sequential

- What happens *sequentially*?
- What happens *simultaneously*?

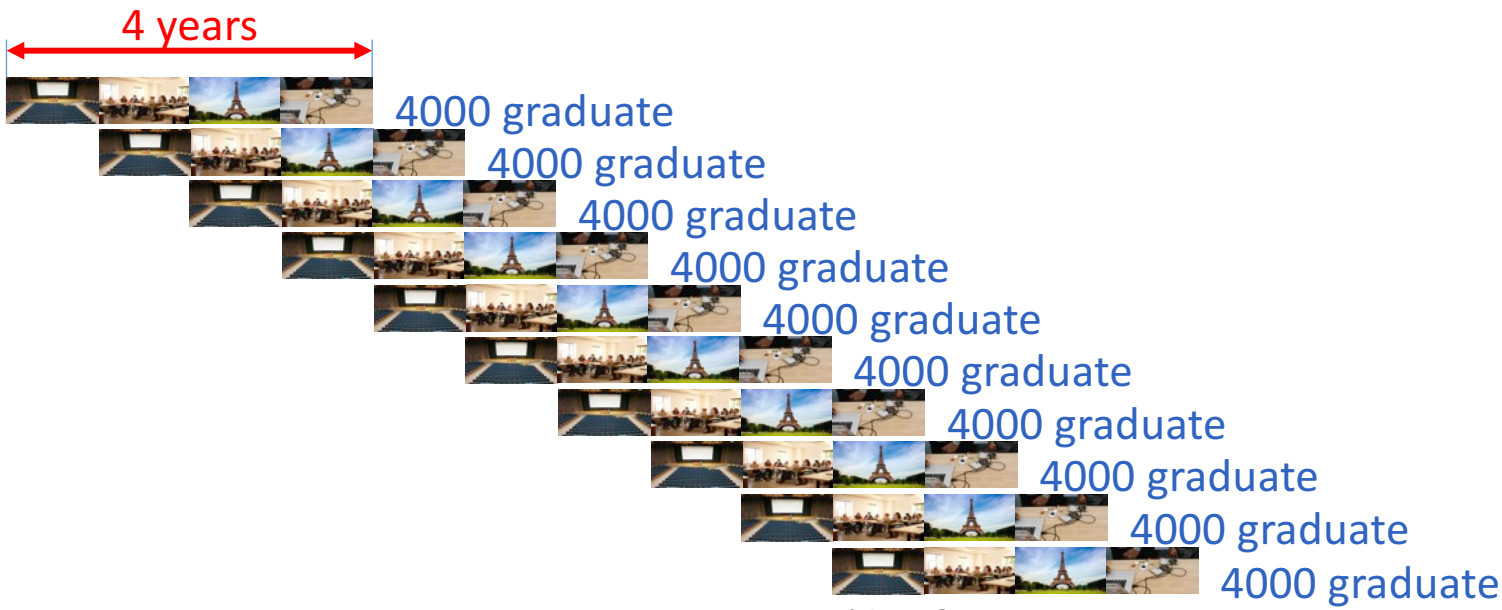

Agenda

- Finish Single-Cycle RISC-V Datapath
- Controller
- Instruction Timing
- Performance Measures
- Introduction to Pipelining
- **Pipelined RISC-V Datapath**
- And in Conclusion, ...

Pipelining with RISC-V

Phase	Pictogram	t_{step} Serial	t_{cycle} Pipelined
Instruction Fetch	IM	200 ps	200 ps
Reg Read	Reg	100 ps	200 ps
ALU	ALU	200 ps	200 ps
Memory	DM	200 ps	200 ps
Register Write	Reg	100 ps	200 ps
$t_{instruction}$	IM Reg ALU DM Reg	**800 ps**	**1000 ps**

instruction sequence

add t0, t1, t2

or t3, t4, t5

sll t6, t0, t3

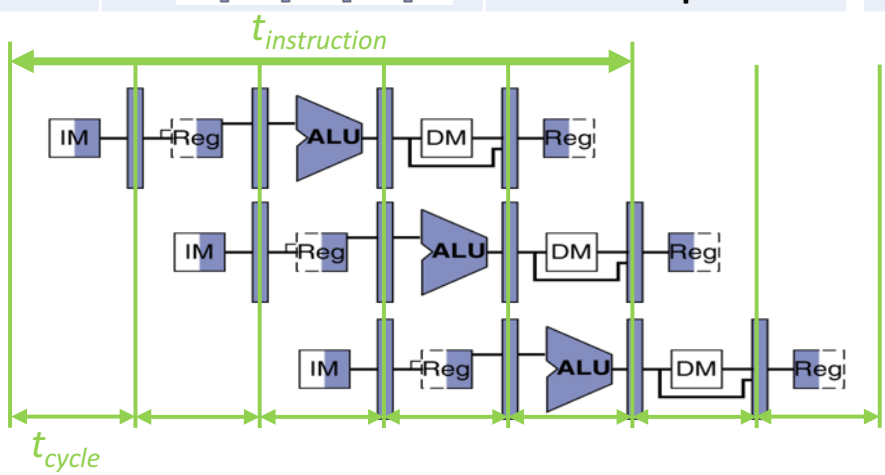

Pipelining with RISC-V

instruction sequence

add t0, t1, t2

or t3, t4, t5

sll t6, t0, t3

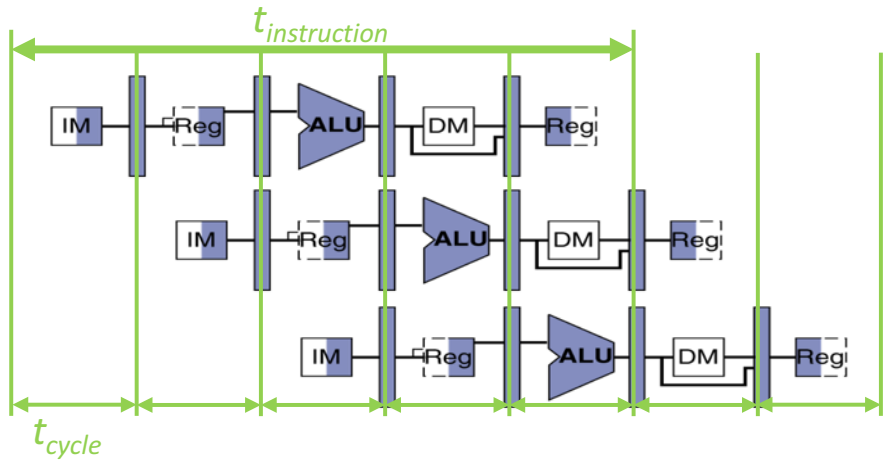

	Single Cycle	Pipelining
Timing	t_{step} = 100 … 200 ps	t_{cycle} = 200 ps
	Register access only 100 ps	All cycles same length
Instruction time, $t_{instruction}$	= t_{cycle} = 800 ps	1000 ps
Clock rate, f_s	1/800 ps = 1.25 GHz	1/200 ps = 5 GHz
Relative speed	1 x	4 x

Sequential vs Simultaneous

What happens sequentially, what happens simultaneously?

instruction sequence

add t0, t1, t2

or t3, t4, t5

sll t6, t0, t3

sw t0, 4(t3)

lw t0, 8(t3)

addi t2, t2, 1

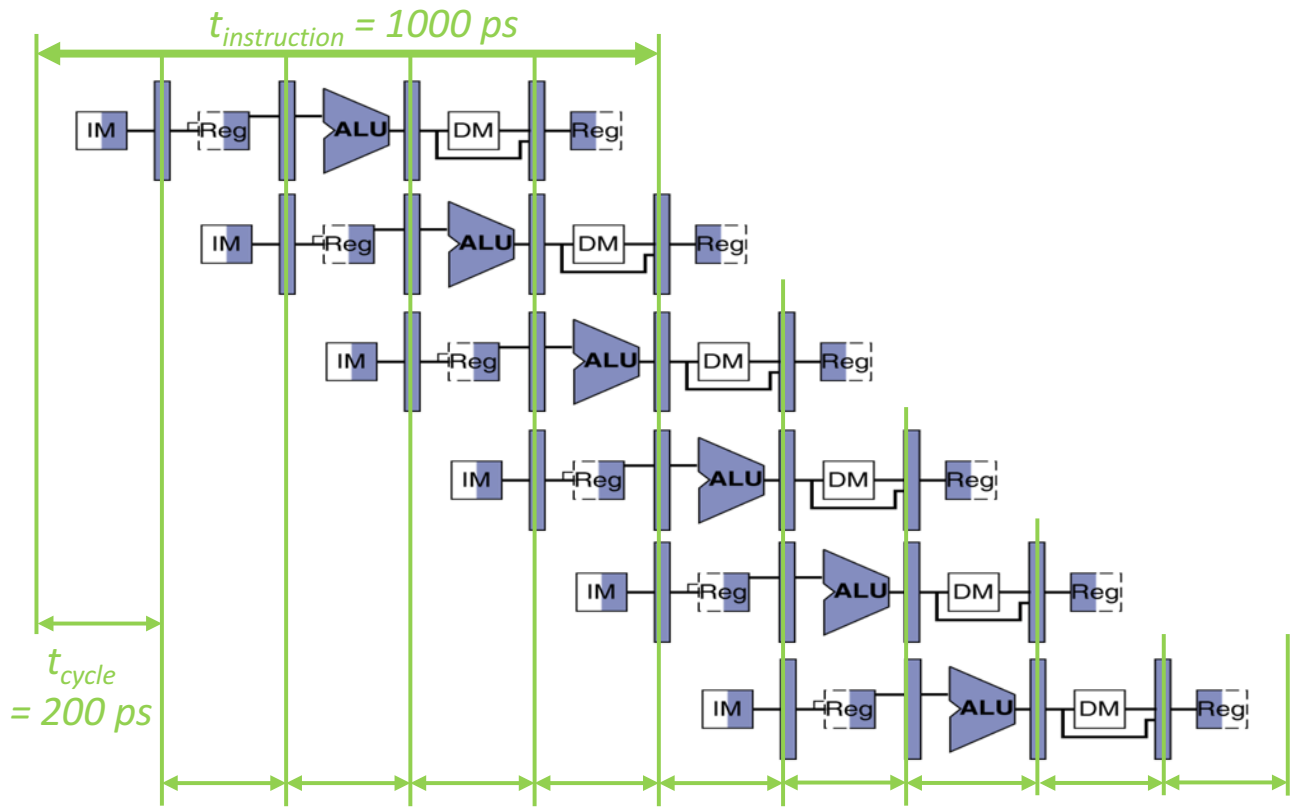

Agenda

- Finish Single-Cycle RISC-V Datapath
- Controller
- Instruction Timing
- Performance Measures
- Introduction to Pipelining
- Pipelined RISC-V Datapath
- **And in Conclusion, ...**

And in Conclusion, …

- Controller
  - Tells universal datapath how to execute each instruction
- Instruction timing
  - Set by instruction complexity, architecture, technology
  - Pipelining increases clock frequency, “instructions per second”
    - But does not reduce time to complete instruction
- Performance measures
  - Different measures depending on objective
    - Response time
    - Jobs / second
    - Energy per task