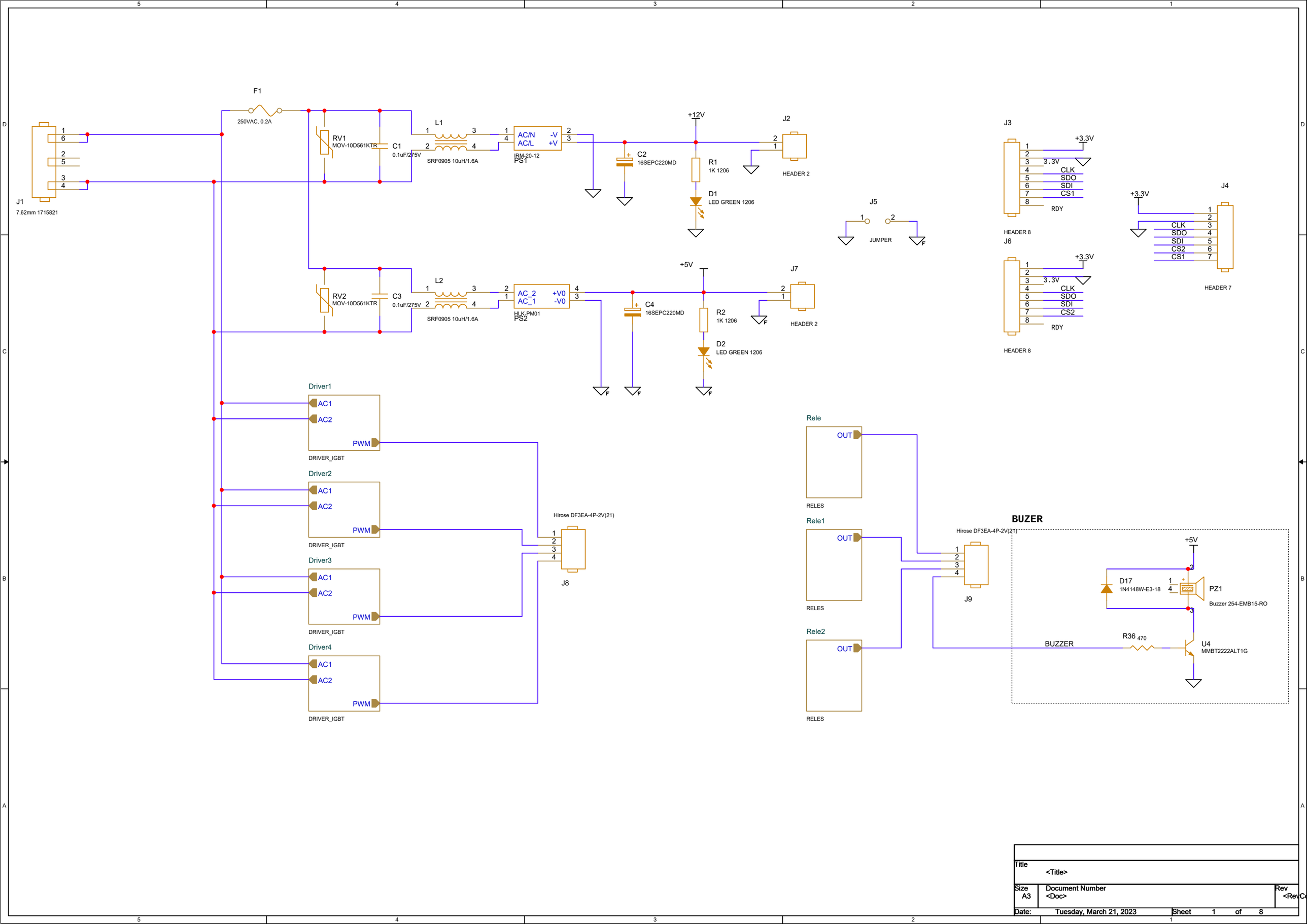

Title	<Title>	
Size A3	Document Number <Doc>	Rev <RevC
Date: Tuesday, March 21, 2023	Sheet 1 of 8	

5 4 3 2 1