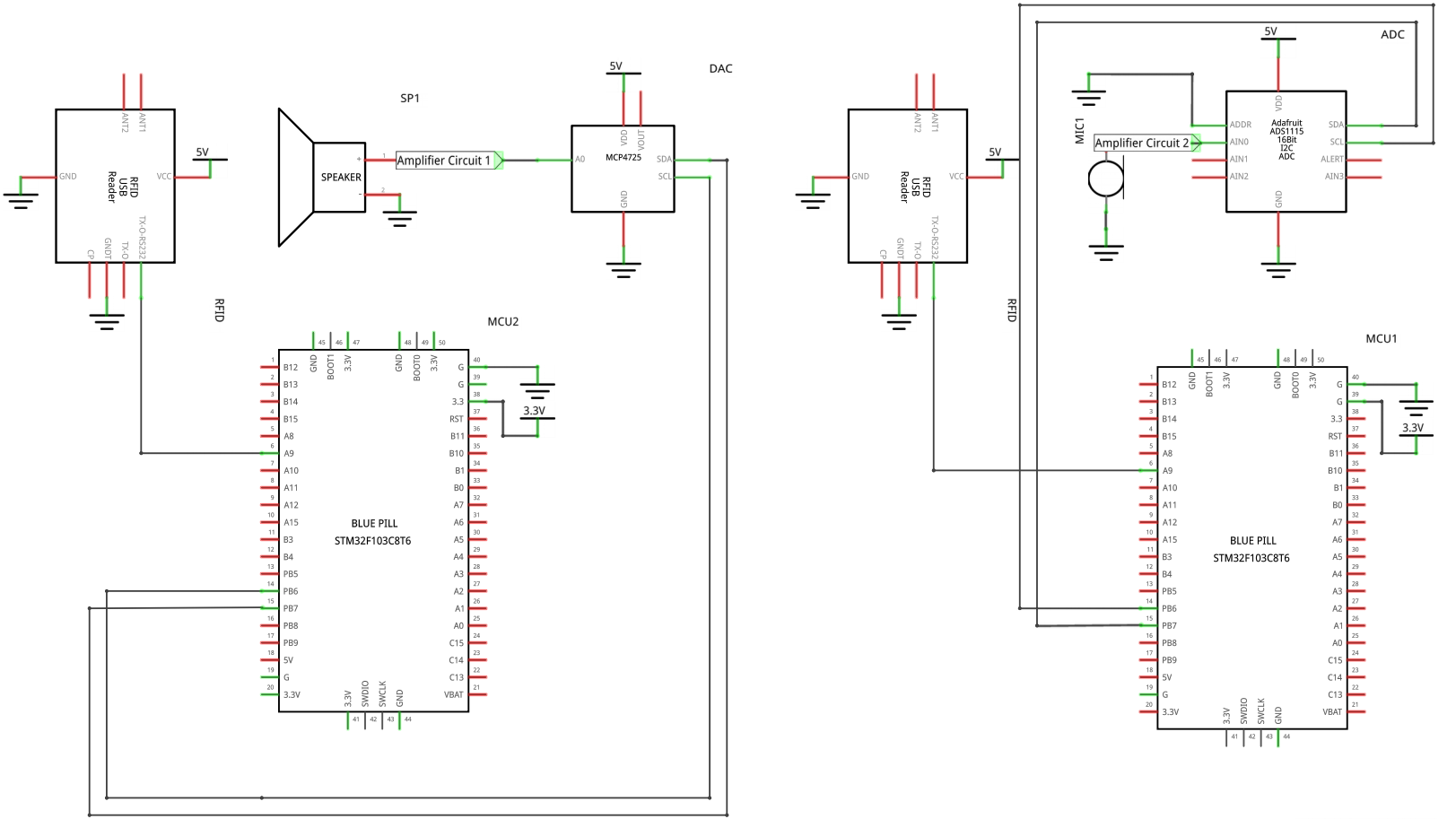
RFID
USB
Reader
ANT2
ANT1
GND
VCC
5V
CP
GNDT
TX-O
TX-O-RS232
SP1
SPEAKER
Amplifier Circuit 1
DAC
MCP4725
VDD
VOUT
A0
SDA
SCL
GND
MCU2
BLUE PILL
STM32F103C8T6
3.3V
MIC1
Amplifier Circuit 2
ADC
Adafruit
ADS1115
16Bit
I2C
ADC
ADDR
AIN0
AIN1
AIN2
AIN3
ALERT
MCU1