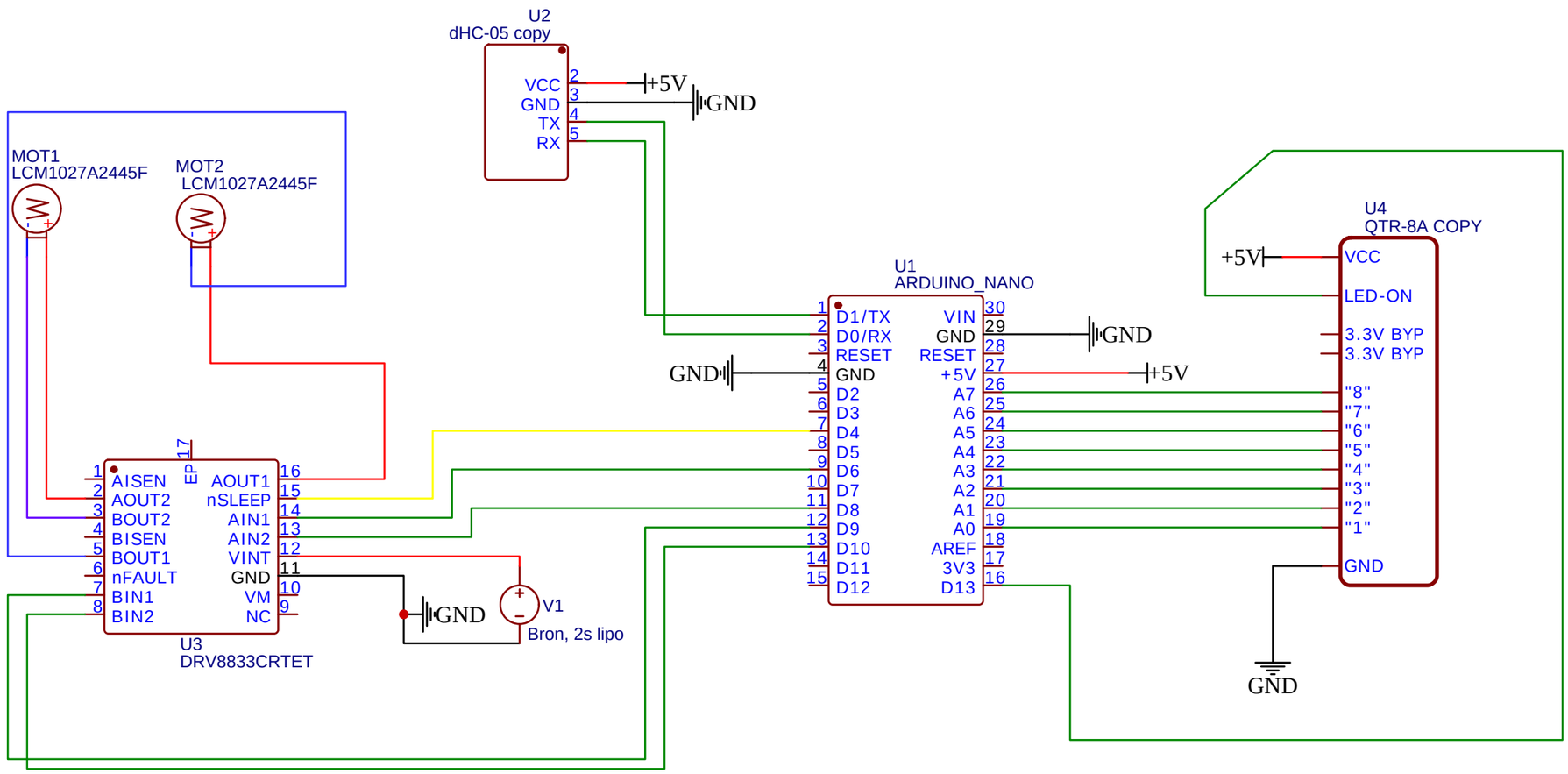

TITLE: Sheet_1	REV: 1.0
EasyEDA	Company: Your Company
	Sheet: 1/1
	Date: 2024-10-11 Drawn By: luka.steyaert

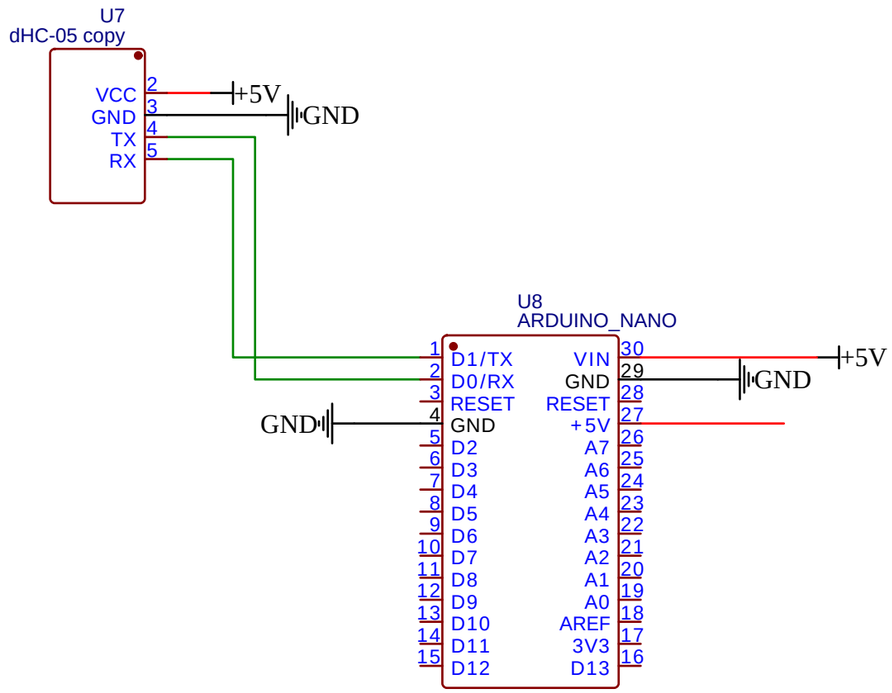

TITLE: Sheet_2		REV: 1.0
EasyEDA	Company: Your Company	Sheet: 1/1
	Date: 2024-10-25 Drawn By: luka.steyaert	

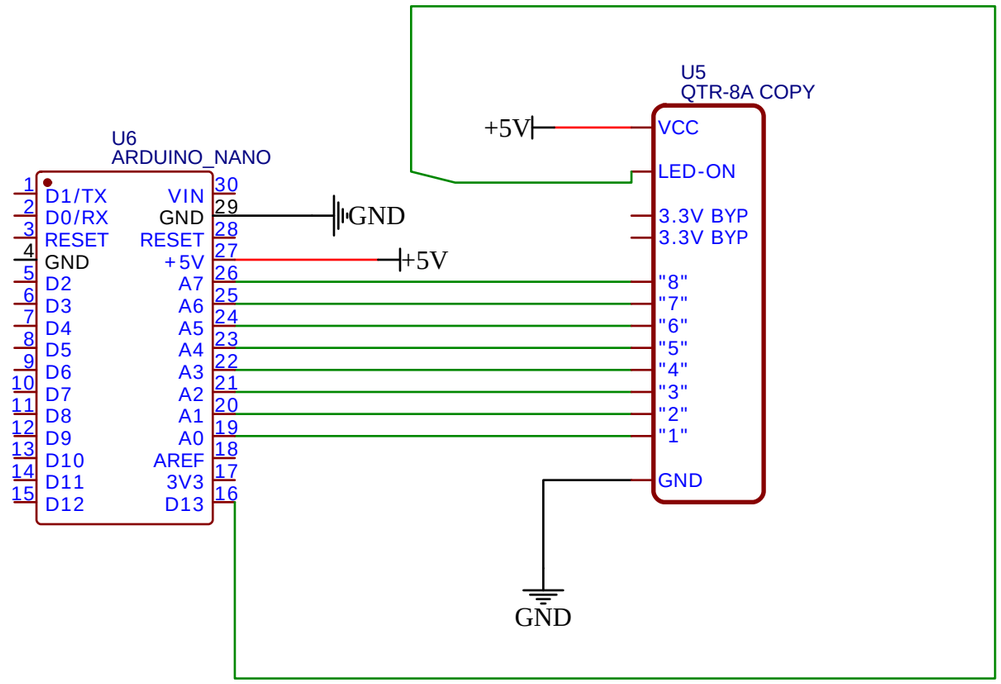

TITLE: Sheet_3		REV: 1.0
EasyEDA	Company: Your Company	Sheet: 1/1
	Date: 2024-10-25 Drawn By: luka.steyaert	

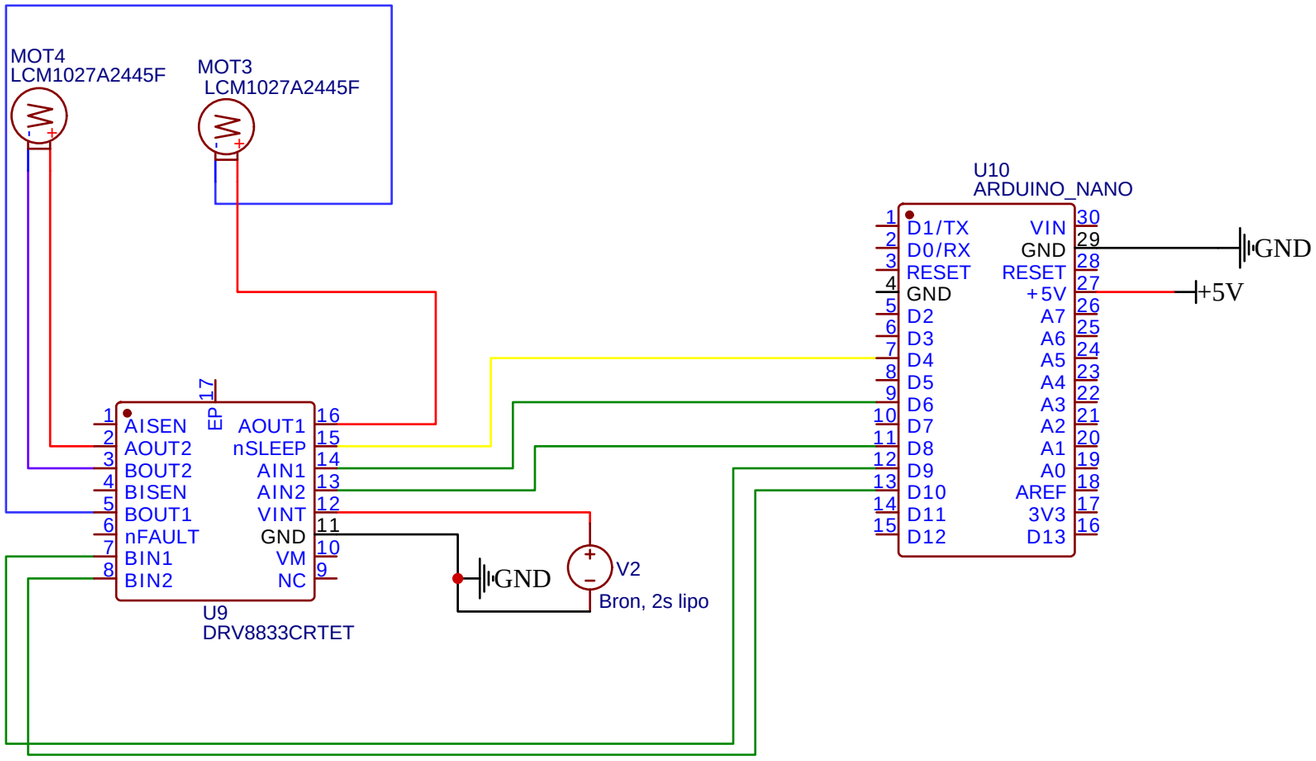

TITLE: Sheet_3		REV: 1.0
EasyEDA	Company: Your Company	Sheet: 1/1
	Date: 2024-10-25 Drawn By: luka.steyaert	

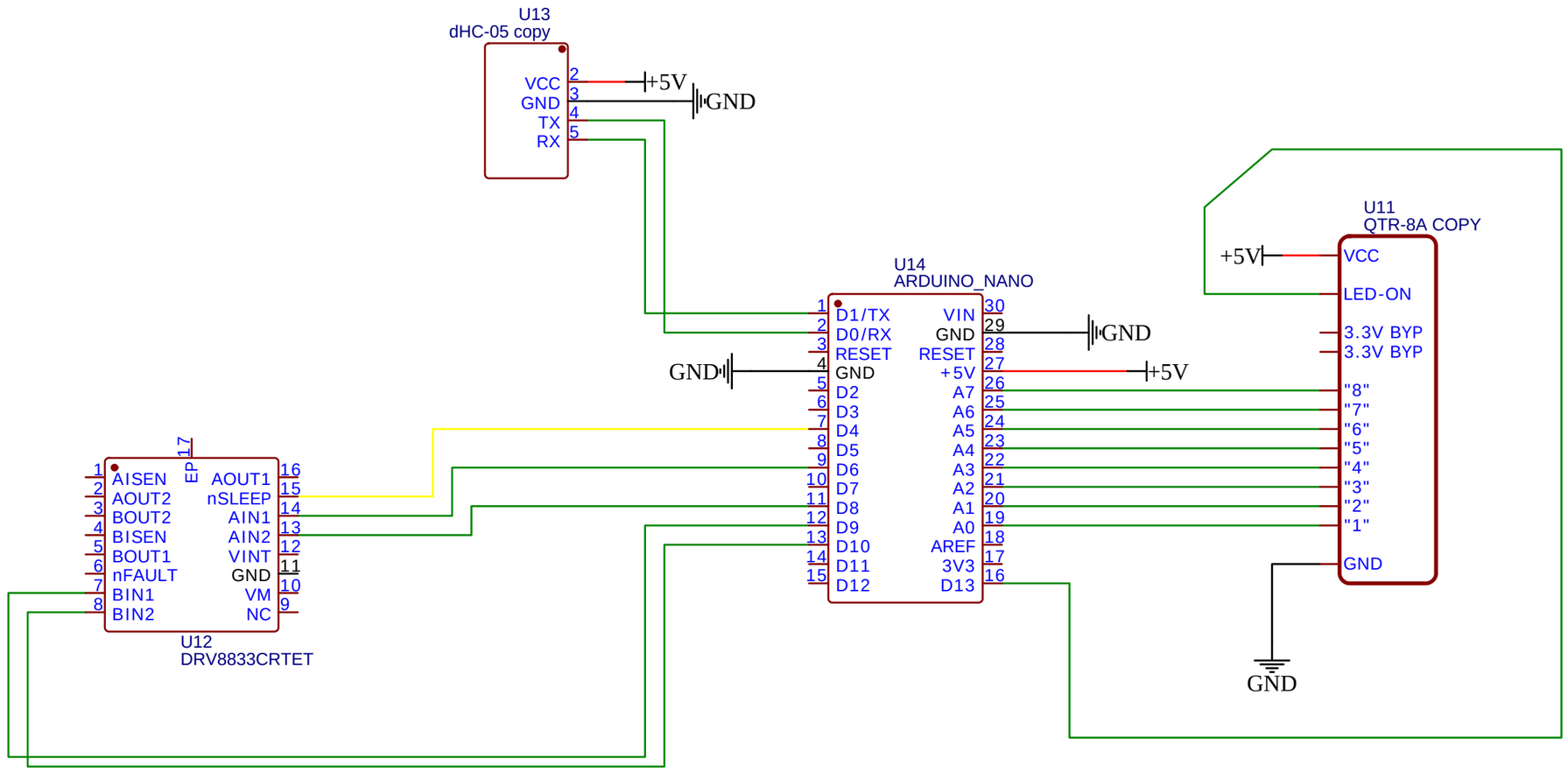

TITLE: Sheet_3	REV: 1.0
Company: Your Company	Sheet: 1/1
Date: 2024-10-25 Drawn By: luka.steyaert	