Page 2

Expansion connectors, LCD interface, I2C IO-expansion, RS232 interface, uSD interface, Joystick and accelerometer.

Page 3

SPI-Ethernet interface and GPS interface

Rev 1.1

Switch ETH_CS and ETH_INT control for ENC28J60 (switched XP0.14 and XP0.15)

Rev 1.0

Original revision

UL = UnLoaded = normally not mounted component.

Default jumper settings are indicated in the schematic. However, always check jumper positions on actual boards since there is no guarantee that all jumpers are in default place.

(C) Embedded Artists AB

TITLE: Experiment Expansion Board v1.1

Document Number:

REV:

Date: 2009-04-22 22:52:43

Sheet: 1/3

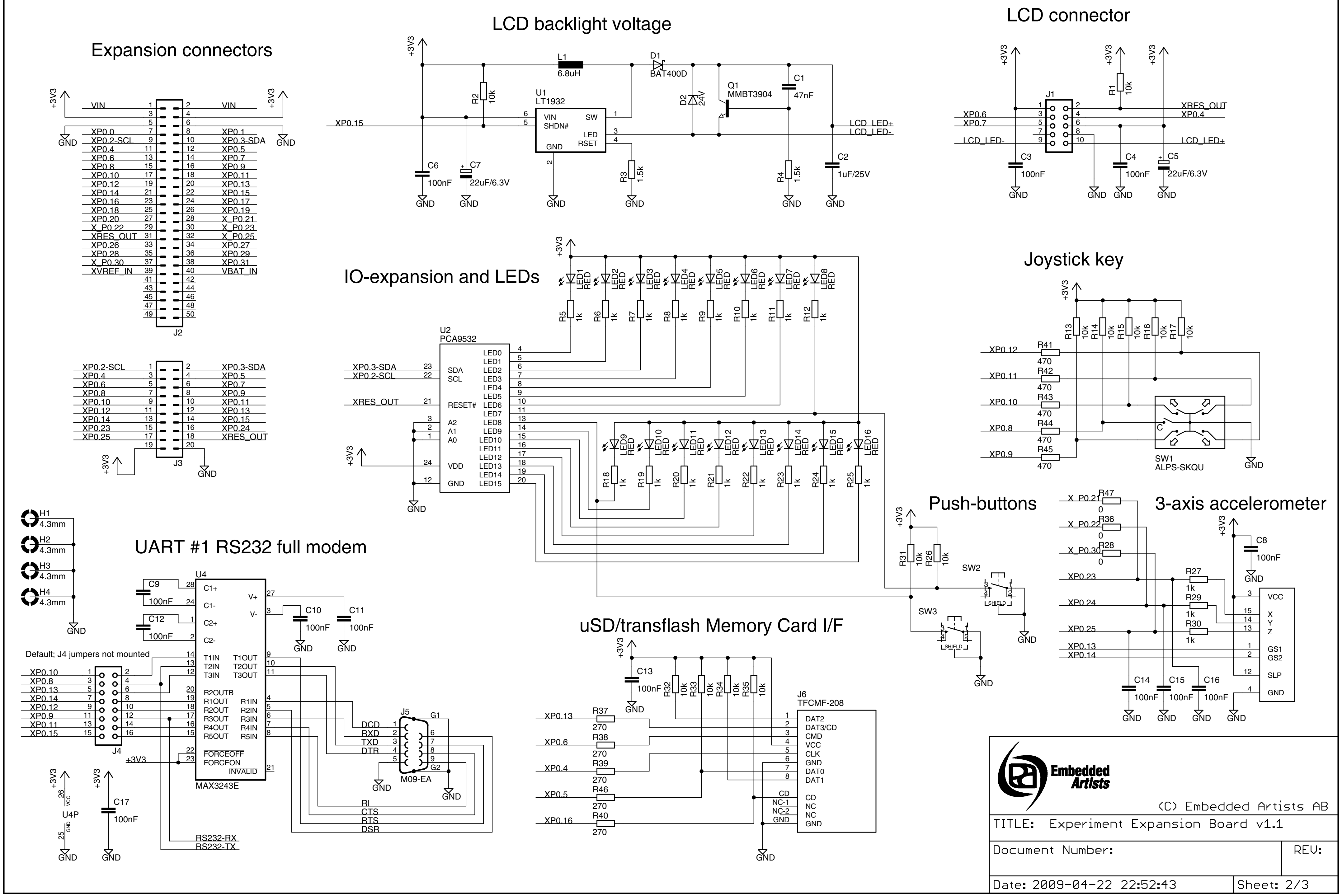
Expansion connectors
LCD backlight voltage
LCD connector
IO-expansion and LEDs
Joystick key
Push-buttons
3-axis accelerometer
UART #1 RS232 full modem
uSD/transflash Memory Card I/F
+3V3
GND
VIN
XP0.0
XP0.1
XP0.2-SCL
XP0.3-SDA
XP0.4
XP0.5
XP0.6
XP0.7
XP0.8
XP0.9
XP0.10
XP0.11
XP0.12
XP0.13
XP0.14
XP0.15
XP0.16
XP0.17
XP0.18
XP0.19
XP0.20
X_P0.21
X_P0.22
X_P0.23
XRES_OUT
X_P0.25
XP0.26
XP0.27
XP0.28
XP0.29
X_P0.30
XP0.31
XVREF_IN
VBAT_IN
XP0.23
XP0.24
XP0.25
J2
J3
L1
6.8uH
D1
BAT400D
D2
24V
Q1
MMBT3904
C1
47nF
C2
1uF/25V
U1
LT1932
VIN
SW
SHDN#
LED
RSET
GND
R2
10k
R3
1.5k
R4
1.5k
C6
100nF
C7
22uF/6.3V
LCD_LED+
LCD_LED-
J1
R1
10k
C3
100nF
C4
100nF
C5
22uF/6.3V
U2
PCA9532
SDA
SCL
RESET#
A2
A1
A0
VDD
GND
LED0
LED1
LED2
LED3
LED4
LED5
LED6
LED7
LED8
LED9
LED10
LED11
LED12
LED13
LED14
LED15
LED16
RED
R5
R6
R7
R8
R9
R10
R11
R12
R18
R19
R20
R21
R22
R23
R24
R25
1k
R13
R14
R15
R16
R17
R41
R42
R43
R44
R45
470
SW1
ALPS-SKQU
C
R31
R26
SW2
SW3
SHIELD
R47
R36
R28
0
R27
R29
R30
C8
100nF
VCC
X
Y
Z
GS1
GS2
SLP
C14
C15
C16
H1
H2
H3
H4
4.3mm
U4
MAX3243E
C9
C10
C11
C12
C1+
C1-
C2+
C2-
V+
V-
T1IN
T2IN
T3IN
T1OUT
T2OUT
T3OUT
R2OUTB
R1OUT
R2OUT
R3OUT
R4OUT
R5OUT
R1IN
R2IN
R3IN
R4IN
R5IN
FORCEOFF
FORCEON
INVALID
Default; J4 jumpers not mounted
J4
J5
M09-EA
G1
G2
DCD
RXD
TXD
DTR
RI
CTS
RTS
DSR
RS232-RX
RS232-TX
U4P
VCC
C17
100nF
C13
R32
R33
R34
R35
R37
R38
R39
R46
R40
270
J6
TFCMF-208
DAT2
DAT3/CD
CMD
CLK
DAT0
DAT1
CD
NC-1
NC-2
NC

(C) Embedded Artists AB

TITLE: Experiment Expansion Board v1.1

Document Number:

REV:

Date: 2009-04-22 22:52:43

Sheet: 2/3

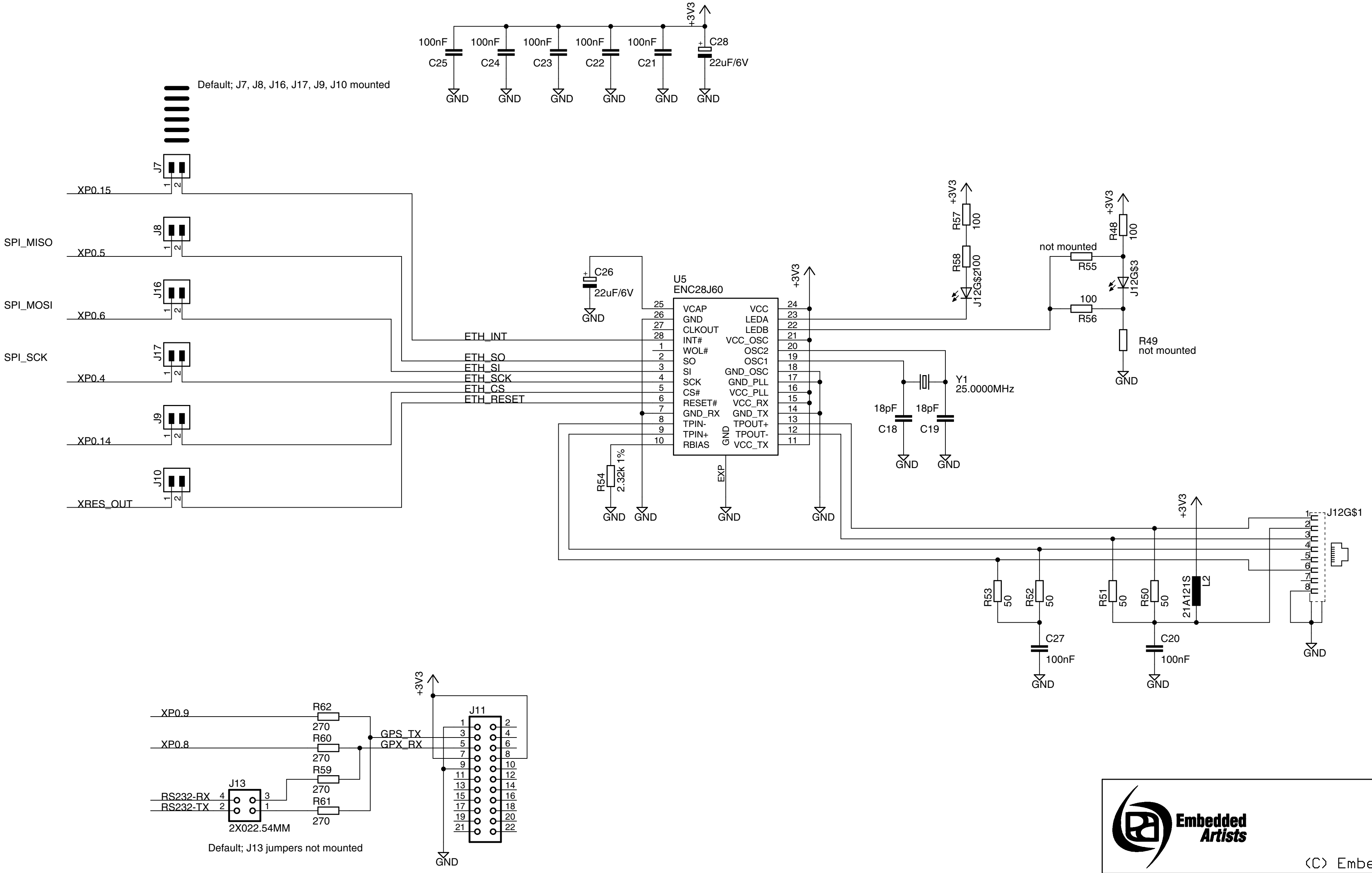
Default; J7, J8, J16, J17, J9, J10 mounted
J7
XP0.15
J8
SPI_MISO
XP0.5
J16
SPI_MOSI
XP0.6
J17
SPI_SCK
XP0.4
J9
XP0.14
J10
XRES_OUT
ETH_INT
ETH_SO
ETH_SI
ETH_SCK
ETH_CS
ETH_RESET
+3V3
100nF C25
100nF C24
100nF C23
100nF C22
100nF C21
C28 22uF/6V
GND
C26 22uF/6V
U5
ENC28J60
25 VCAP
26 GND
27 CLKOUT
28 INT#
1 WOL#
2 SO
3 SI
4 SCK
5 CS#
6 RESET#
7 GND_RX
8 TPIN-
9 TPIN+
10 RBIAS
24 VCC
23 LEDA
22 LEDB
21 VCC_OSC
20 OSC2
19 OSC1
18 GND_OSC
17 GND_PLL
16 VCC_PLL
15 VCC_RX
14 GND_TX
13 TPOUT+
12 TPOUT-
11 VCC_TX
GND
EXP
R54 2.32k 1%
R57 100
R58 2100
J12G$2
R48 100
not mounted
R55
100
R56
J12G$3
R49
not mounted
Y1
25.0000MHz
18pF C18
18pF C19
J12G$1
R53 50
R52 50
R51 50
R50 50
21A121S L2
C27 100nF
C20 100nF
XP0.9
R62 270
XP0.8
R60 270
R59 270
R61 270
GPS_TX
GPX_RX
J13
RS232-RX
RS232-TX
2X022.54MM
Default; J13 jumpers not mounted
J11
1 2 3 4 5 6 7 8 9 10 11 12 13 14 15 16 17 18 19 20 21 22

Embedded Artists

(C) Embedded Artists AB

TITLE: Experiment Expansion Board v1.1

Document Number:

REV:

Date: 2009-04-22 22:52:43

Sheet: 3/3