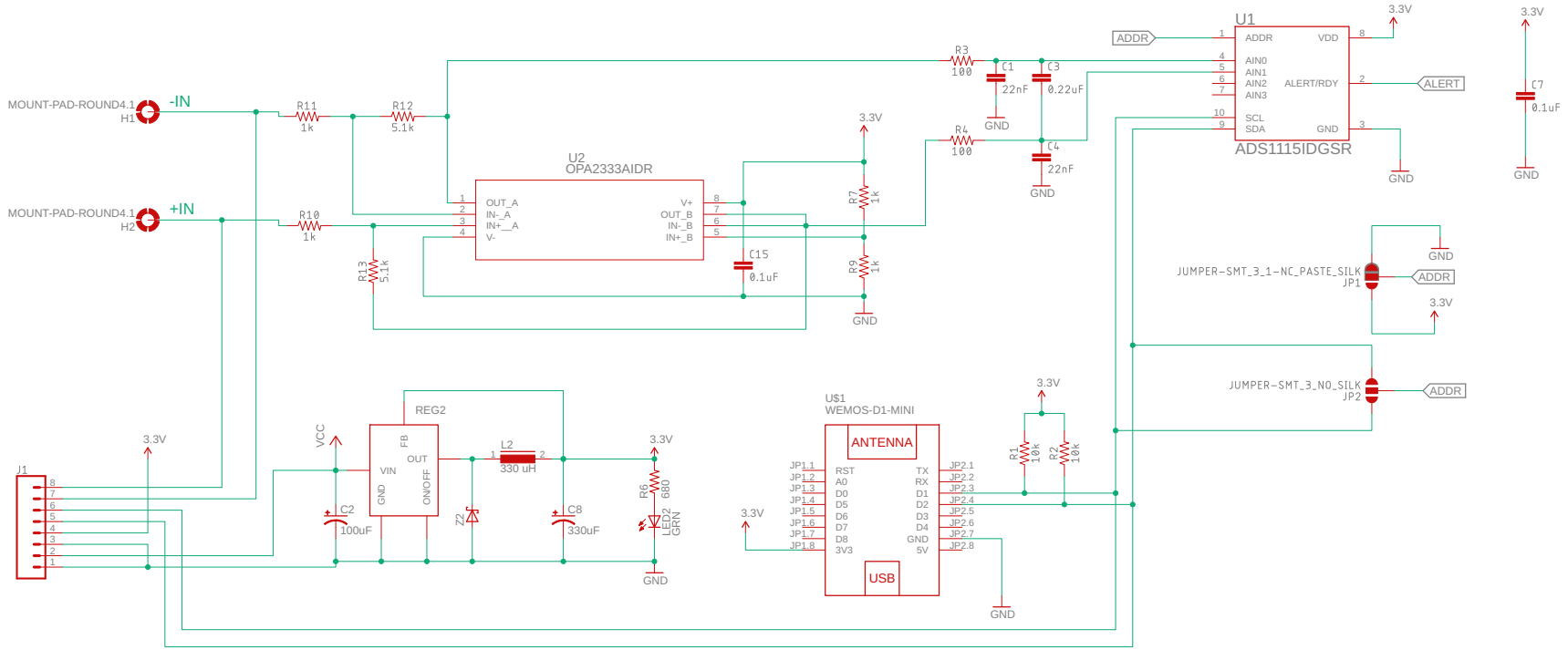

TITLE: Shunt_Amp_Meter	
Document Number:	REV:
Date: 6/20/19 2:48 PM	Sheet: 1/1

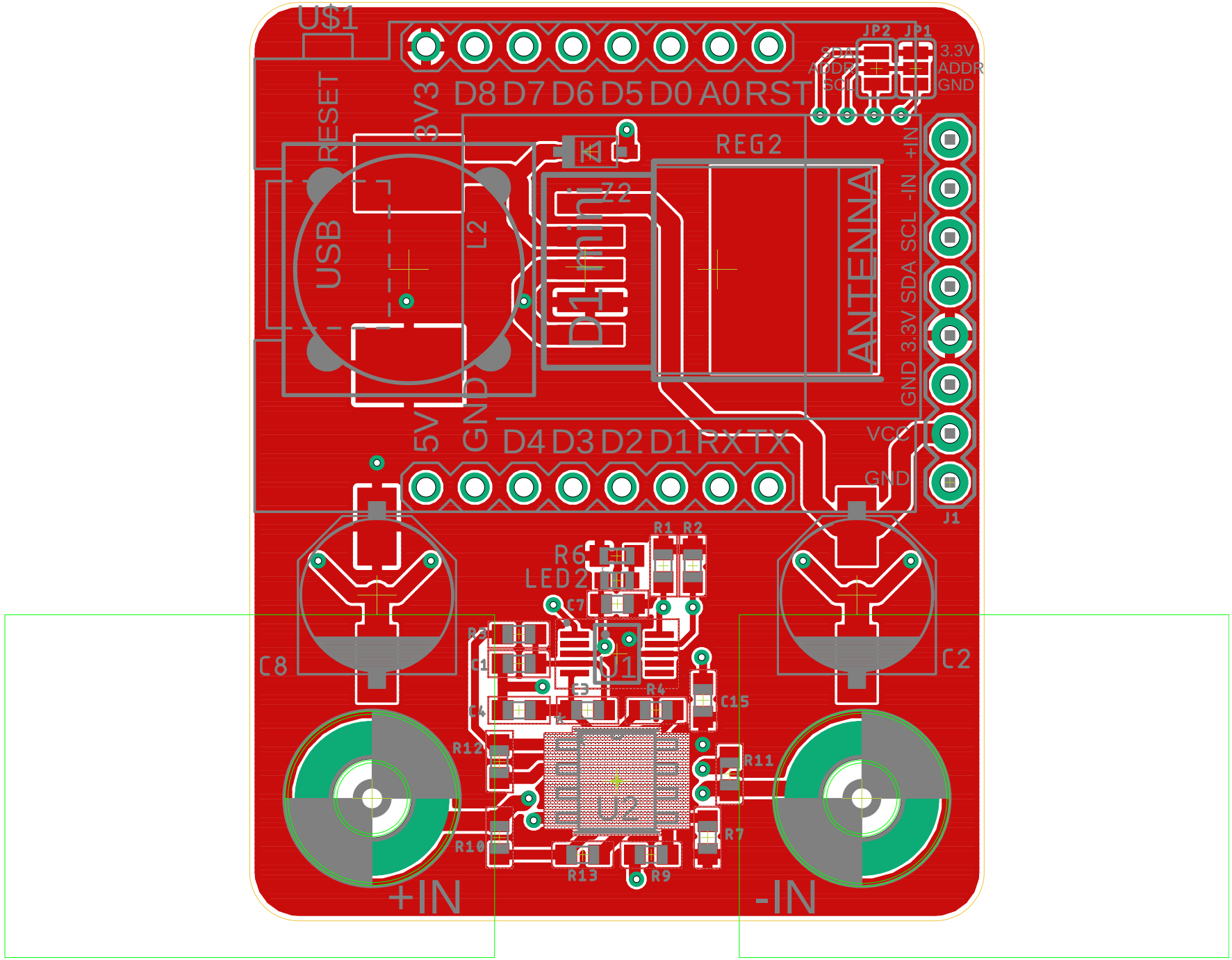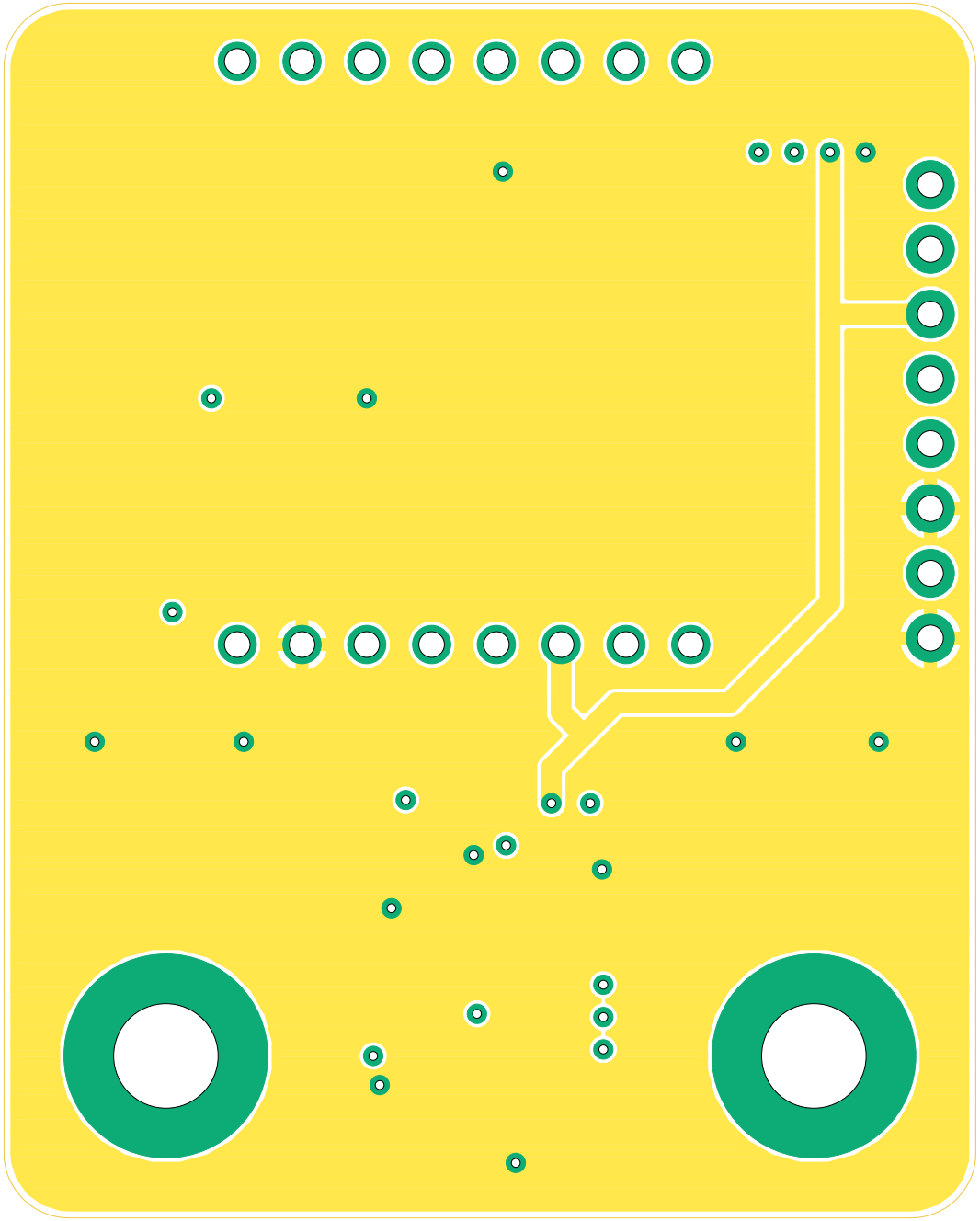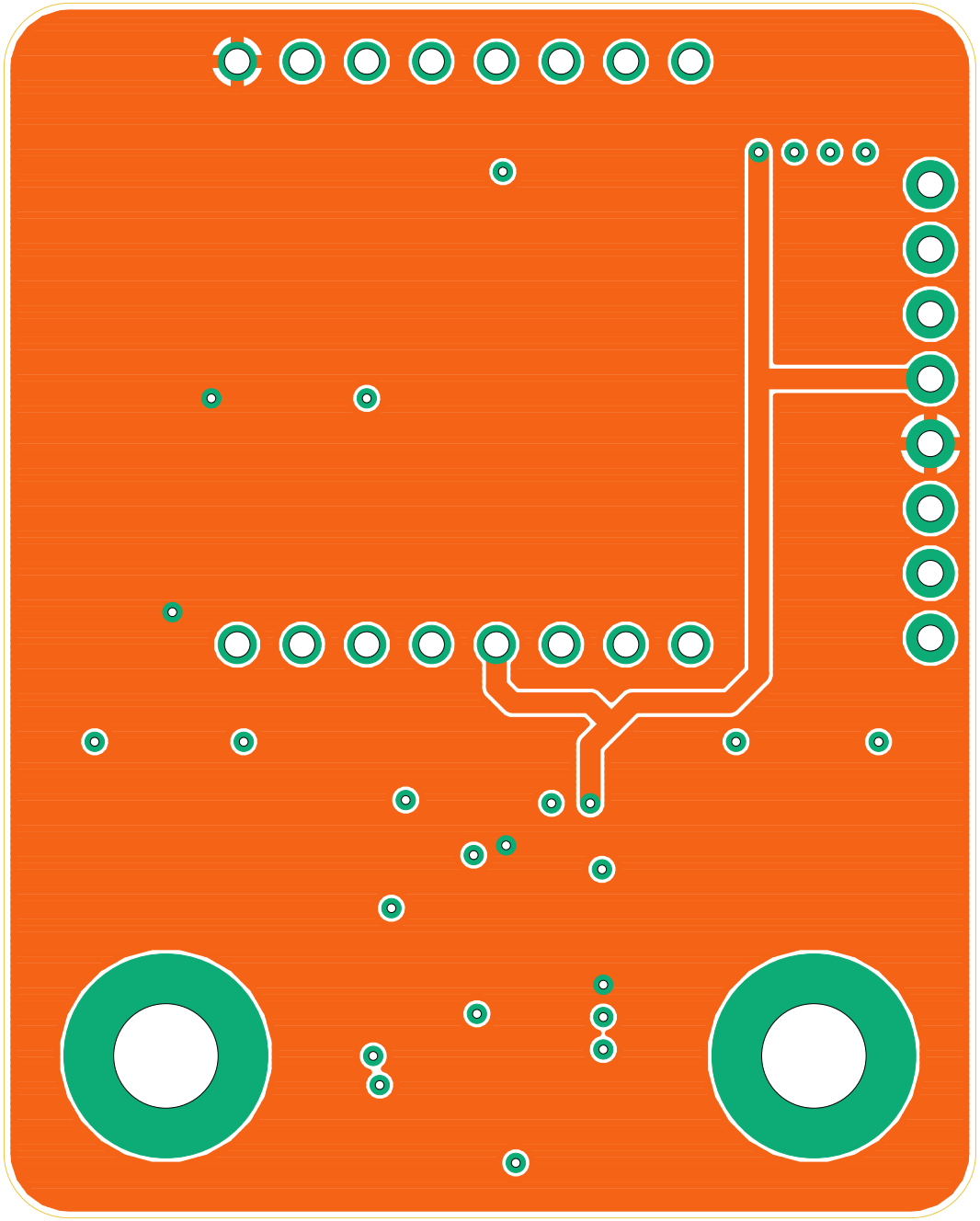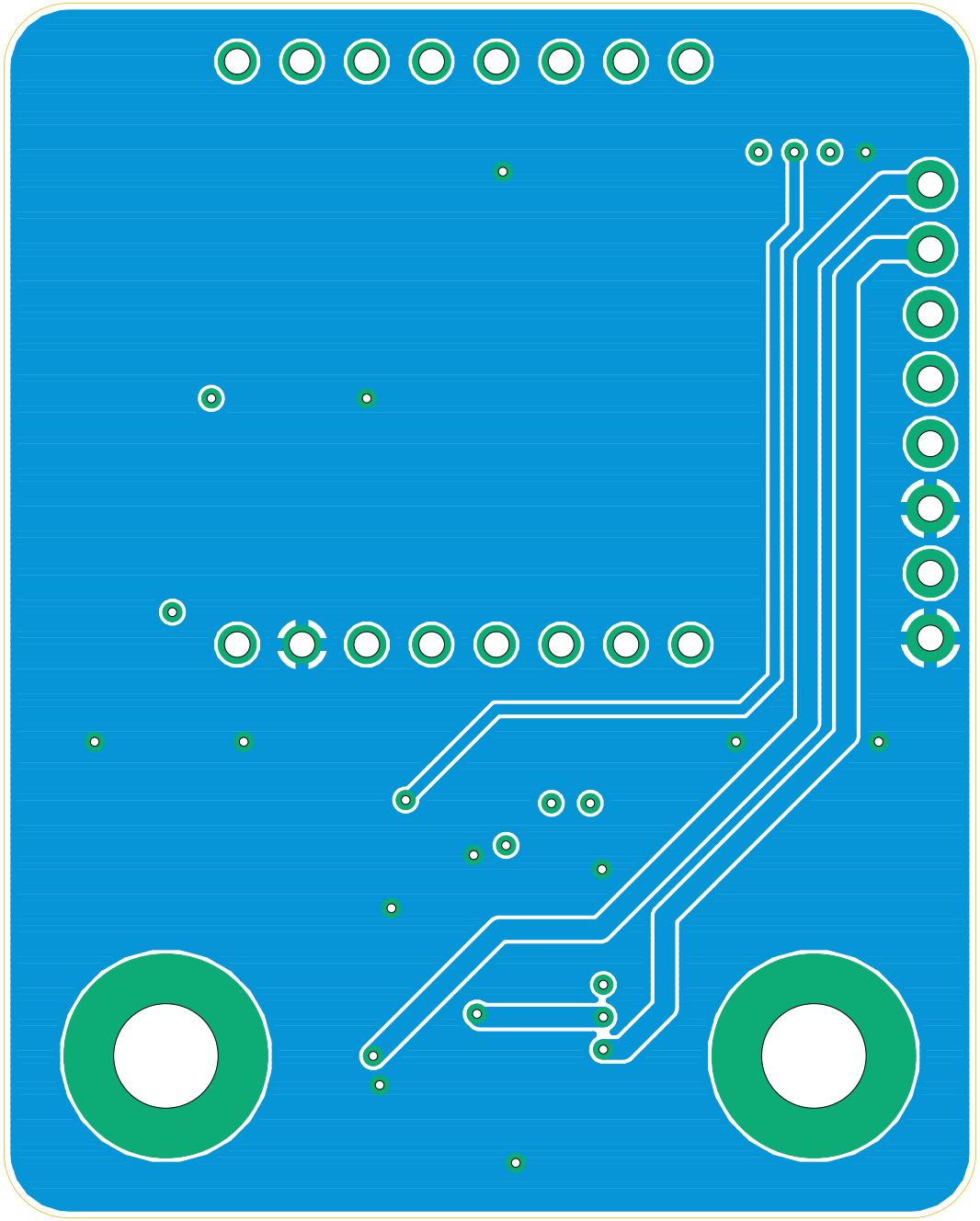
U$1
RESET
3V3
D8 D7 D6 D5 D0 A0 RST
JP2 JP1
SDA
ADDR
SCL
3.3V
ADDR
GND
REG2
Z2
L2
USB
ANTENNA
+IN
-IN
SCL
SDA
3.3V
GND
5V
GND
D4 D3 D2 D1 RX TX
VCC
GND
J1
R1 R2
R6
LED2
C7
R3
C1
C4
U1
R4
C15
R12
R11
U2
R10
R7
R13
R9
C8
C2
+IN
-IN