Mitigating Inter-Process Communication Overhead in seL4-Based Systems: An Asynchronous, Multiclient File Server

A REPORT SUBMITTED TO THE UNIVERSITY OF MANCHESTER
FOR THE DEGREE OF BACHELOR OF SCIENCE
IN THE FACULTY OF SCIENCE AND ENGINEERING

2026

Luke Rule

Supervised by Dr. James Garside

Department of Computer Science

Abstract

This dissertation presents the design, implementation and evaluation of a multiclient file server for the seL4 Microkit framework, motivated by the aim of mitigating Inter-Process Communication (IPC) overhead — a key performance constraint in microkernel-based systems — through asynchronous client-server communication. The system supports a rich set of file system operations, including namespace, data and metadata management, and multiclient access control.

The file server is structured around flexible and modular core abstractions, including blocks, inodes, directories and file descriptors, and interfaced by two communication models: a synchronous model based on protected procedure calls and an asynchronous model based on notifications, shared memory queues and *batched* request processing, where multiple operations may be sent and processed collectively. A transparent Application Programming Interface (API) was implemented to abstract these communication details while preserving consistent operation semantics across both models.

The asynchronous model demonstrated reduced IPC overhead through batching operations and reducing synchronisation frequency, improving throughput and lowering average operation latency. However, these benefits proved workload-dependent, with limited gains under highly interdependent workloads. A key insight is that communication structure alone can significantly influence system behaviour independently from core file system design. The results further suggest that, although evaluated in a single-threaded environment, the asynchronous design could enable substantially greater concurrent processing on multicore systems through non-blocking execution and overlap of request generation, servicing and response handling.

This work demonstrates that complex, stateful services can be realised entirely in user space within the Microkit framework for seL4 and provides insight into trade-offs between synchronous and asynchronous communication for future microkernel-based system services.

Contents

1 Introduction **1**

1.1 Context and Motivation 1

1.2 Aims and Objectives 2

1.3 Evaluation Strategy 3

1.4 Key Findings 3

1.5 Dissertation Structure 3

2 Background **4**

2.1 Operating System Kernels 4

2.1.1 Definition and Characteristics 4

2.1.2 Microkernels Versus Monolithic Kernels 5

2.2 seL4 Microkernel 6

2.2.1 Overview and Characteristics 6

2.2.2 Design 7

2.2.3 Use Cases and Applications 8

2.2.4 Microkit Framework for seL4 8

2.3 Client-Server Communication 9

2.3.1 Synchronous Model 9

2.3.2 Asynchronous Model 10

2.4 File Servers in Operating Systems 10

2.4.1 Role and Functionality 10

2.4.2 Abstractions 11

2.4.3 Storage and Organisation 11

File Layout 11

Allocation Strategies 12

Metadata Organisation 14

Directory Structure 15

2.4.4 Client Management 16

2.5 Related Work 17

3 Design **18**
3.1 System Requirements and Constraints . . . 18
3.2 IPC Design and File Server Interface . . . 18
3.2.1 Synchronous Model *(Baseline)* . . . 19
3.2.2 Asynchronous Model *(Proposed IPC Mitigation Strategy)* . . . 20
3.3 File Server . . . 22
3.3.1 Architectural Overview . . . 22
3.3.2 Component Design and Interactions . . . 24
Blocks . . . 24
inodes . . . 25
Directories . . . 26
File Descriptors . . . 27
3.3.3 Multiclient Support . . . 28
3.3.4 Request Processing Flow . . . 28

4 Implementation **29**
4.1 Development Environment and Tools . . . 29
4.2 Microkit Framework Setup . . . 29
4.3 Interface . . . 31
4.3.1 Synchronous Server Model . . . 31
Client-Server Communication . . . 31
API . . . 32
4.3.2 Asynchronous Server Model . . . 32
Client-Server Communication . . . 32
API . . . 35
4.4 File Server . . . 36
4.4.1 Data Structures and Access Mechanisms . . . 36
Blocks . . . 37
inodes . . . 37
Directories . . . 38
File Descriptors . . . 39
4.4.2 Operations . . . 40
Namespace Mutation . . . 40
Runtime State Management . . . 42
Data Movement . . . 43
Metadata Access and Modification . . . 44
4.5 Error Handling . . . 45

5 Evaluation **46**
5.1 Validation . . . 46
5.1.1 Unit Tests . . . 46
5.1.2 Integration Tests . . . 47
Single Client . . . 47
Multiple Clients . . . 47
5.2 Performance Evaluation . . . 47
5.2.1 Goals . . . 47
5.2.2 Metrics . . . 48
5.2.3 Experimental Setup . . . 48
5.2.4 Benchmark Design . . . 48
5.2.5 Results and Analysis . . . 49
Single-Client Per-Operation Benchmark . . . 49
Realistic Multiclient Workload . . . 51

6 Conclusion **53**
6.1 Contributions . . . 53
6.2 Drawbacks and Limitations . . . 53
6.2.1 FS Limitations . . . 53
6.2.2 Benchmarking Constraints . . . 54
6.2.3 Lack of Persistent Storage . . . 54
6.2.4 Single-Threaded Execution . . . 54
6.2.5 Additional Client Burden . . . 54
6.3 Future Work . . . 55

Word Count: 14,851

List of Figures

1.1 Comparison of tightly coupled and loosely coupled system structures. 1

2.1 View of kernel interaction within an operating system. 4
2.2 Comparison of microkernel and monolithic kernel architectures. Adapted from source: [30] 5
2.3 Comparison of ACLs and capability based access control models. Adapted from source: [23] 7
2.4 Build-time and run-time structures for a Microkit-based system. Adapted from source: [7] 8
2.5 Communication channels between PDs. Adapted from source: [7] 9
2.6 Comparison of synchronous and asynchronous communication models. 9
2.7 Multiclient file server structure. 10
2.8 Example of contiguous block allocation. Source: [31]. 12
2.9 Example of linked block allocation. Source: [31]. 13
2.10 Example of indexed block allocation. Source: [31]. 13
2.11 Example of FAT based file management. Source: [31]. 14
2.12 Example of inode based file management with indirect block indexing. Source: [31]. . . . 15
2.13 Example of a hierarchical directory structure. Source: [31]. 16

3.1 Synchronous multiclient-server interaction. 19
3.2 Asynchronous multiclient-server interaction. 21
3.3 Architectural overview of the file server. 23
3.4 Block allocation table structure. 24
3.5 inode and block reference structure. 25
3.6 Directory structure via inodes and blocks. 26
3.7 File descriptor structure. 27

4.1 Asynchronous client-server communication via shared queues and buffers. 32
4.2 Buffer management in asynchronous communication. 33
4.3 Path-based lookup through directory traversal. 39

5.1 Average ticks per operation by batch size (Read and Write) 49
5.2 Gradient of average ticks per operation by batch size (Read and Write) 50
5.3 Total ticks per client by number of clients (Synchronous vs Asynchronous) 51
5.4 Range of client completion times (ticks) by number of clients 52
5.5 Normalised range of client completion times (ticks) by number of clients 52

Declaration

No portion of the work referred to in this report has been submitted in support of an application for another degree or qualification of this or any other university or other institute of learning.

Copyright

i. The author of this thesis (including any appendices and/or schedules to this thesis) owns certain copyright or related rights in it (the "Copyright") and s/he has given The University of Manchester certain rights to use such Copyright, including for administrative purposes.

ii. Copies of this thesis, either in full or in extracts and whether in hard or electronic copy, may be made **only** in accordance with the Copyright, Designs and Patents Act 1988 (as amended) and regulations issued under it or, where appropriate, in accordance with licensing agreements which the University has from time to time. This page must form part of any such copies made.

iii. The ownership of certain Copyright, patents, designs, trade marks and other intellectual property (the "Intellectual Property") and any reproductions of copyright works in the thesis, for example graphs and tables ("Reproductions"), which may be described in this thesis, may not be owned by the author and may be owned by third parties. Such Intellectual Property and Reproductions cannot and must not be made available for use without the prior written permission of the owner(s) of the relevant Intellectual Property and/or Reproductions.

iv. Further information on the conditions under which disclosure, publication and commercialisation of this thesis, the Copyright and any Intellectual Property and/or Reproductions described in it may take place is available in the University IP Policy (see `http://documents.manchester.ac.uk/DocuInfo.aspx?DocID=24420`), in any relevant Thesis restriction declarations deposited in the University Library, The University Library's regulations (see `http://www.library.manchester.ac.uk/about/regulations/`) and in The University's policy on presentation of Theses

Acknowledgements

I would like to thank...

Abbreviations

API	Application Programming Interface
BAT	Block Allocation Table
ELF	Executable and Linkable Format
FAT	File Allocation Table
FD	File Descriptor
FDT	File Descriptor Table
FS	File System
I/O	Input/Output
IPC	Inter-Process Communication
NTFS	New Technology File System
OS	Operating System
PD	Protection Domain
POSIX	Portable Operating System Interface
QEMU	Quick Emulator
RPC	Remote Procedure Call
TCB	Trusted Computing Base

1 Introduction

1.1 Context and Motivation

Modern software systems are larger, more complex and more interconnected than ever before [17], placing significant demands upon the Operating Systems (OS) which underpin them. Contemporary mainstream operating systems, such as Windows and Linux are largely based upon monolithic kernel designs[1] [34], where the majority of their functionality resides in a single, privileged address space. This key characteristic enables high performance, yet it comes at the cost of scalability, security and robustness, as it requires a large Trusted Computing Base (TCB) where a single fault can compromise the entire system [34].

Simultaneously, modern software and hardware architectures increasingly employ modularity, isolation and concurrency: distributed systems, cloud-native microservices and data centre-scale applications all decompose functionality into loosely-coupled components [17], as illustrated in Figure 1.1, and most current hardware performance scaling is driven by multi-core parallelism [2]. These trends place pressure on OS design to provide stronger security guarantees and better support for concurrent, component-based execution.

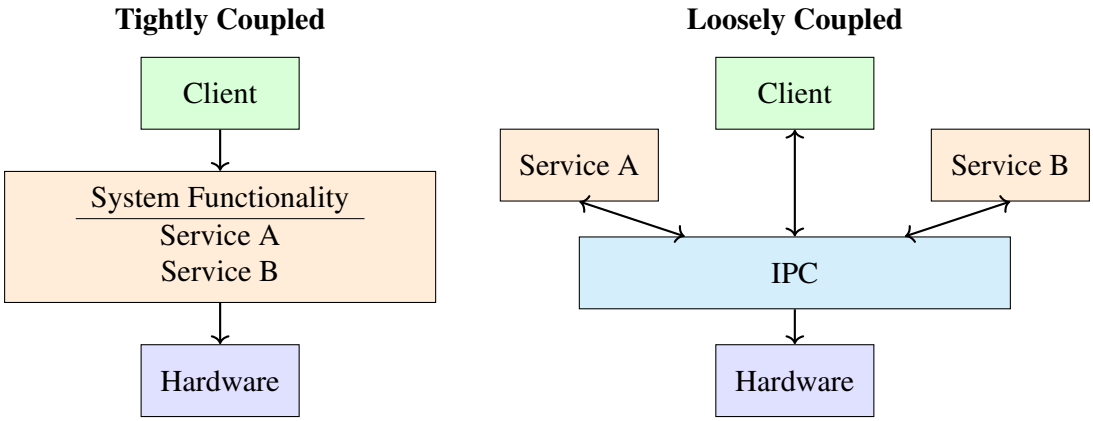

Figure 1.1: Comparison of tightly coupled and loosely coupled system structures.

[1] macOS employs a 'hybrid' kernel, but retains many monolithic characteristics [32], and as such loses many of the security benefits typically associated with pure microkernel design.

Microkernel design naturally aligns with these requirements. By minimising kernel functionality and moving most non-essential services, such as device drivers and file systems, into user space, microkernels reduce the TCB significantly and enforce separation between components. However, this modularity requires costly IPC across the protected domains [31].

The L4 microkernel [20] addressed this bottleneck by substantially reducing IPC costs through aggressive kernel minimisation and IPC fastpath design; however, despite these advances, IPC overhead remains a fundamental performance driver in microkernel-based systems [20]. By combining these performance improvements with strong security guarantees through formal verification, the seL4 microkernel [16] represents a significant step towards real-world competitiveness, particularly in safety-critical domains [12].

One of the most frequently accessed OS services is the File Server (FS), which acts as the primary interface for persistent storage and data exchange [31]. FS operations are both latency-sensitive and IPC-intensive, making them critical to overall system performance in microkernel environments. In synchronous architectures even simple file operations may involve multiple IPC operations between the client and the FS, amplifying the impact of communication overhead.

This report presents the design and implementation of an asynchronous, multiclient FS for the seL4 microkernel, validates its correctness and usability, and evaluates its effectiveness in mitigating IPC overhead. The proposed architecture decouples request submission from response handling, reducing blocking behaviour, increasing concurrency and enabling the *batching* of operations, where multiple requests may be combined and sent together. These properties have the potential to improve throughput and resource utilisation under both single and multiclient workloads, particularly when deployed on increasingly multicore machines [35], where parallel execution can be fully exploited.

In addition, beyond serving as an evaluation platform, the implementation constitutes a practical, reusable system component, demonstrating how critical services can be structured within a microkernel environment using Microkit [36], seL4's component-based OS framework.

1.2 Aims and Objectives

Building upon the L4 family's reduction of IPC overhead, and motivated by the increasing importance of concurrency in contemporary systems [13], this work aims to further mitigate IPC costs by reducing the number of interactions required between components. In doing so, it also seeks to demonstrate the capabilities of the seL4 Microkit framework through the design and implementation of a flexible, user-space FS.

This project has the following objectives:

- **Design and implement**:
  - A viable FS core capable of supporting a wide range of file and directory operations.
  - An efficient storage model based on inode and block abstractions, supporting effective space utilisation and flexible file and directory representation.
  - A scalable, asynchronous interface enabling concurrent request submissions and completion handling from multiple clients, alongside a synchronous interface to facilitate comparison between communication models.
  - A lightweight client-side library providing a simple and usable abstraction over the FS interface.
  - A benchmarking framework to evaluate asynchronous FS performance against a synchronous baseline under realistic workloads.
- **Validate**: the correctness of the FS through comprehensive multi-level testing.
- **Evaluate**: the effectiveness of the asynchronous FS architecture in reducing IPC overhead and improving performance in terms of latency, throughput and scalability.

1.3 Evaluation Strategy

To evaluate the proposed implementation, this work considered both FS correctness at multiple levels of testing granularity and the performance characteristics of asynchronous queue-based submission compared with synchronous blocking calls through a set of varied benchmarks measuring key metrics including latency, throughput and scalability. Experiments were conducted across different levels of request batching, with custom workloads designed to approximate realistic file system usage.

1.4 Key Findings

The evaluation demonstrated that the asynchronous model introduced negligible overhead compared to synchronous execution when no batching was applied with equivalent per-operation latencies. Crucially, as batching was introduced, significant improvements were observed, with up to a 70% increase in operation throughput, showing that reducing IPC frequency can substantially improve performance.

1.5 Dissertation Structure

The report begins by presenting the background required to understand the FS and its architectural context, before introducing the system design, including the overall architecture and communication models. It then describes the implementation of the FS and its two interfaces, followed by the verification strategy and performance evaluation methodology used to compare the communication models. The report concludes with a summary of findings, limitations and directions for future work.

2 Background

This chapter provides the necessary background for understanding the design and implementation of the FS, introducing key concepts underlying file servers and microkernel systems, with a particular focus on IPC and its performance implications.

2.1 Operating System Kernels

2.1.1 Definition and Characteristics

The kernel is the core component of an operating system [27], executing at the highest privilege level of the processor. It provides the fundamental interface between hardware and software, managing critical system resources, as shown in Figure 2.1.

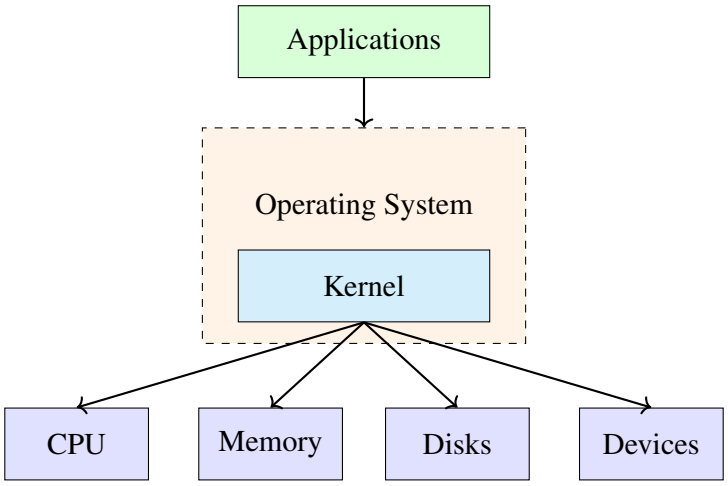

Figure 2.1: View of kernel interaction within an operating system.

The specific set of managed resources varies by design, but at a minimum the kernel must provide services that cannot be implemented safely or reliably in user space [31], such as memory and device management, and scheduling. By acting as the sole authority over these resources, the kernel enforces isolation, preventing unintended or malicious interference between processes or to the system as a whole [34].

2.1.2 Microkernels Versus Monolithic Kernels

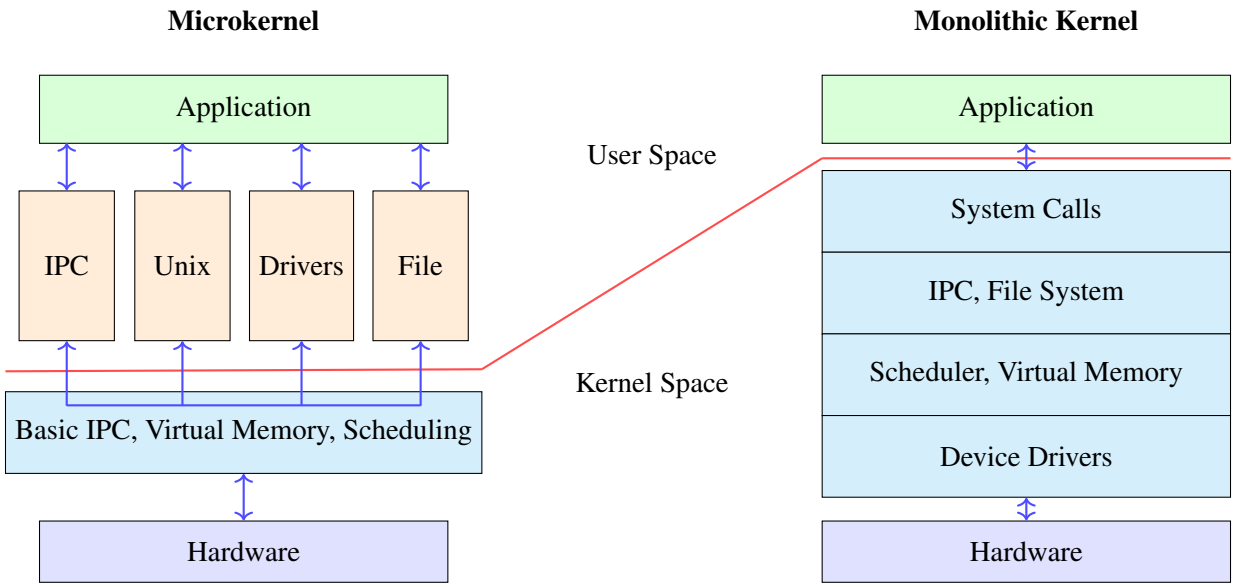

Figure 2.2: Comparison of microkernel and monolithic kernel architectures. Adapted from source: [30]

In addition to the *required* functionality, monolithic kernels also incorporate other low-level services such as device drivers and file systems directly within the kernel [4], as shown in Figure 2.2. All OS services can then be accessed via system calls, transferring control from user space to kernel space through a restricted privilege level switch [24]. Because all these services execute within the same, privileged address space, interactions between kernel components can be performed through efficient function calls, with direct access to process data structures, resulting in low-overhead service invocation, facilitating high-performance systems [34].

From a design perspective, monolithic kernels therefore benefit from simpler service integration – yet, this leads to rising complexity as the system grows; the inherent tight coupling of components can make them more difficult to extend, debug and maintain, as faults may propagate across sub-system boundaries and be harder to isolate [33]. Combined with their larger size, this increases the likelihood of defects within the TCB [34]. This is significant, as faults within the kernel can have system-wide consequences due to its privileged execution context [14].

In contrast, microkernels predominantly restrict kernel functionality to essential mechanisms, delegating higher-level services to user-space components, which must communicate via message passing across their protection boundaries [31], as illustrated in Figure 2.2. Additionally, if the server resides in a separate process from the client, a context switch is required, potentially disrupting processor caches [22], leading to increased overhead for service invocation. However, various optimisations – discussed in Section 2.2 – can significantly reduce these costs.

Additionally, because services are executed in user space and processes reside in separate address spaces, data may need to be copied between them, introducing further overhead [21]. In some cases, this cost can be mitigated through alternative communication mechanisms. Shared memory [31], for example, allows processes to exchange data without copying by mapping a common memory region into multiple processes' address spaces. When combined with techniques such as lock-free data structures [1], communication can occur with minimal kernel involvement. These approaches, however, require careful design to ensure correct memory safety and preservation of isolation guarantees.

Despite these challenges, the reduced kernel size and strong isolation between components in microkernel architectures enable significantly improved security assurance and fault containment [3].

2.2 seL4 Microkernel

2.2.1 Overview and Characteristics

In 1993, Jochen Liedtke developed the L4 microkernel [20] in response to the poor performance of earlier microkernel designs, based on the premise that prioritising *efficiency* was essential for practical adoption. By recognising IPC as the dominant factor in microkernel performance and optimising these mechanisms accordingly, the design achieved a 20× performance improvement over the most popular microkernel at the time [20]. This demonstrated that microkernels could achieve competitive performance, leading to significant further research and the development of multiple L4-derived systems [12], including seL4.

seL4 (Security-Enhanced L4)[16] extends this architecture by combining this high-performance IPC with comprehensive formal verification, becoming the first microkernel to do so [12]. Through the complete kernel implementation being proven correct against its specification, seL4 ensures that system calls behave as specified and that key safety properties – such as memory isolation – are upheld. Assuming correct hardware behaviour, this provides a high degree of assurance that kernel integrity and availability are maintained and that information is not *leaked* between processes, only explicitly shared [16]. However, these guarantees apply only to the kernel itself. User-space components may still exhibit incorrect behaviour and cause failures at that level, but are isolated and cannot compromise kernel correctness.

This separation of concerns makes seL4 particularly well-suited to exploring user-space approaches to performance optimisation, as the minimal and stable kernel design diverts system flexibility to higher-level system components.

2.2.2 Design

The L4 specification optimises IPC through a reduced kernel size and efficient message passing [20]. Earlier microkernel designs attempted to support richer communication abstractions within the kernel, introducing often unnecessary overhead [18]. In contrast, L4 provides only basic, synchronous IPC primitives. This approach prioritises low latency in the common case, removing more complex mechanisms – such as asynchronous buffering – from the kernel. These may instead be constructed externally when required, utilising the efficiency of the primitives provided without burdening the kernel.

A key aim of the design was to minimise kernel size so that it could reside within the processor's first-level cache, reducing execution latency [27]. Combined with the use of physically indexed caches (which are unaffected by address-space switches) this ensured that IPC-induced context switches did not significantly degrade cache locality [20], allowing L4's minimal IPC mechanism to efficiently combine message passing and control transfer with low overhead.

The minimal scale of seL4 makes full-system formal verification realistically possible. To enforce the security properties specified in its proof, seL4 employs a capability-based access control model [16] as shown in Figure 2.3, which associates permission ownership with clients, rather than with objects. *Capabilities* are unforgeable tokens, provided by the kernel, where possession grants explicit rights to their corresponding kernel objects, instead of a server having a list of client permissions and clients using credentials to validate requests [28]. This removal of ambient user authority eliminates 'confused deputy' type problems [10], in which a privileged component is misled into abusing its authority on behalf of an unprivileged caller.

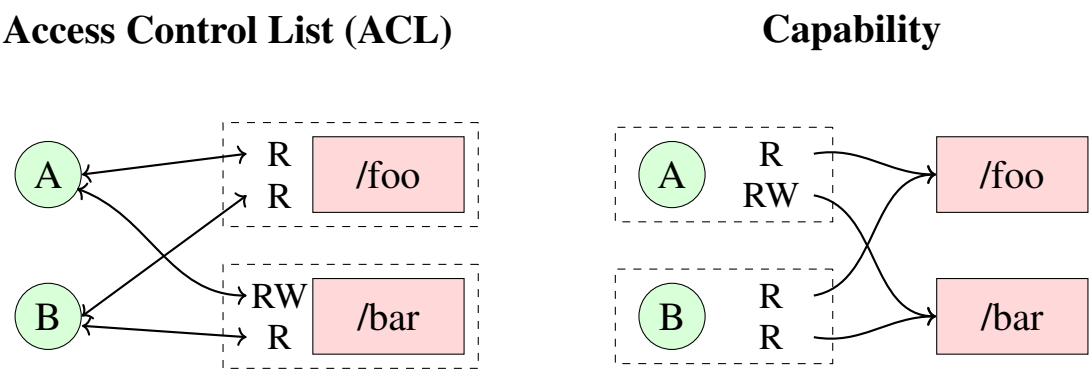

Figure 2.3: Comparison of ACLs and capability based access control models. Adapted from source: [23]

This distribution of authority also decentralises access control, removing the single-point-of-failure risk and simplifies security management by eliminating identity checks [28]. Following the principle of least privilege [29], capabilities are granted by the kernel only when required and may only be transferred explicitly between processes *via* the kernel, ensuring that authority delegation is controlled and auditable.

2.2.3 Use Cases and Applications

seL4's principles of minimality and high assurance lend themselves particularly well to safety-critical and real-time systems, such as aerospace and medical devices, where correctness and isolation are crucial [12]. However, it is also intended as a general-purpose microkernel to enable high-performance systems, establishing that strong security guarantees are not a barrier to efficiency [16].

2.2.4 Microkit Framework for seL4

Microkit is a lightweight OS framework built on top of seL4, designed to simplify and accelerate system development, while still leveraging the microkernel's benefits. It achieves this by abstracting the complex, low-level seL4 mechanisms, such as capability management, and manages them automatically under a structured component model [36]. As such, systems are composed of Protection Domains (PDs), representing an isolated execution environment.

To aid this abstraction simplicity, Microkit systems are defined statically through a system description, from which initialisation code is generated, as displayed in Figure 2.4.

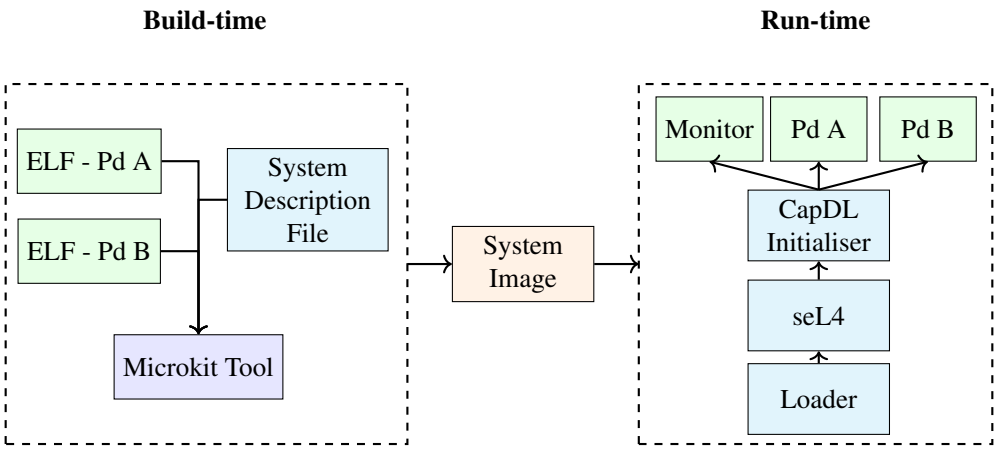

Figure 2.4: Build-time and run-time structures for a Microkit-based system. Adapted from source: [7]

This enables explicit specification of communication channels and shared memory regions between PDs, easing system construction and improving predictability [36]. These communication channels between PDs are connected via well-defined entry points, as shown in Figure 2.5. Synchronous interactions are implemented using RPC communication, while asynchronous interactions are supported via notification objects, enabling event-driven signalling between components.

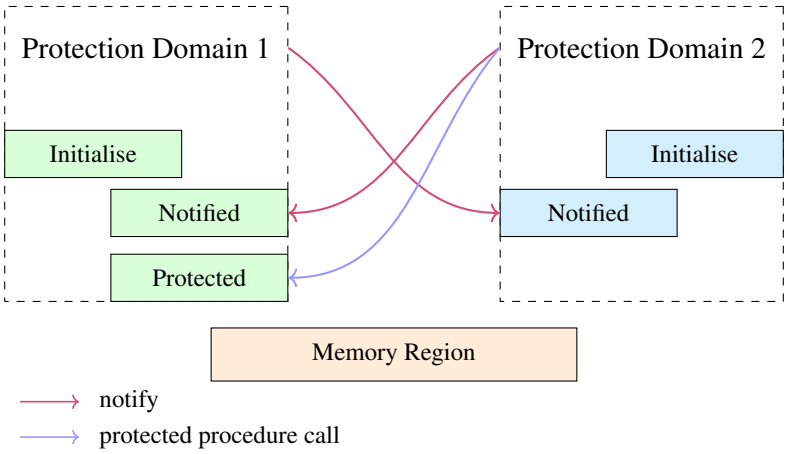

Figure 2.5: Communication channels between PDs. Adapted from source: [7]

2.3 Client-Server Communication

2.3.1 Synchronous Model

Synchronous interfacing is a communication model that utilises blocking behaviour. In a *blocking* operation, the client thread is suspended upon issuing a request and resumes execution only after a response is received from the server [34], as illustrated in Figure 2.6. This is most suitable in systems where the server is highly available and response latency is low, such that blocking delays are minimised. This enforced ordering of operations also significantly improves the predictability of interaction sequences and reduces the system complexity, hence its use within the seL4 kernel [16].

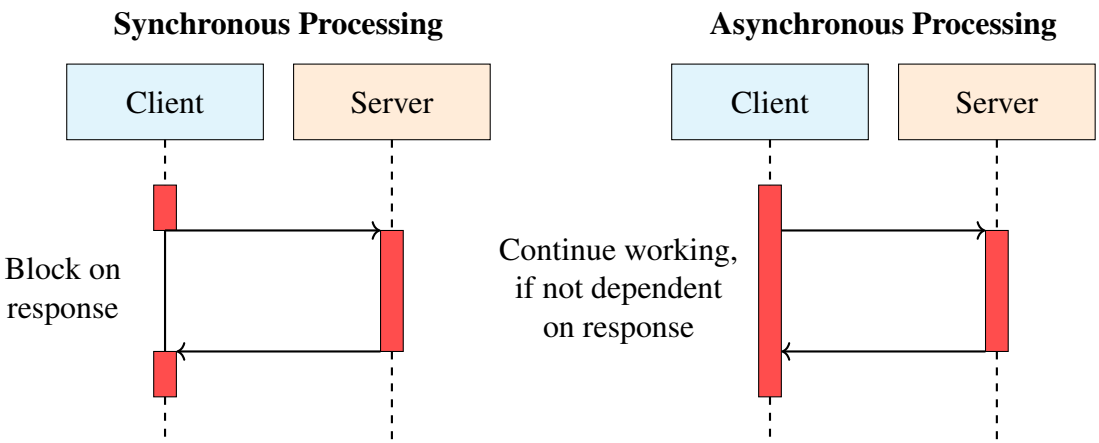

Figure 2.6: Comparison of synchronous and asynchronous communication models.

It is particularly appropriate for situations when subsequent computation depends on the result of the request. However, when this dependency is absent, the blocking mechanism can limit performance due to frequent client idling. Large communication overhead is also incurred for high-frequency operations, as only one may be completed per request.

2.3.2 Asynchronous Model

Alternatively, *asynchronous* interfacing *decouples* the client's request from server-side processing, allowing execution to continue independently from response handling if further processing does not depend on the response [34], as shown in Figure 2.6. This enables significantly improved system throughput and resource utilisation potential [35]. This effect is amplified in multiclient environments, where multiple clients may successfully send requests concurrently, avoiding the widespread blocking that arises when the server must service each request sequentially.

In addition, asynchronous design can reduce the *number* of IPC interactions required through batching requests, significantly lowering communication overhead and improving overall efficiency [9]. This model aligns naturally with microkernel design, where system components are structured as loosely-coupled, user-space services, and minimising IPC-induced synchronisation delays between services is key to improving overall system efficiency [18].

However, these benefits come at the cost of increased design complexity. Supporting concurrent and non-deterministic usage patterns requires the use of queues and buffers to manage outstanding requests and responses [37]. These structures must be carefully sized and managed (by both the client and the server) to prevent request loss or backpressure. If this elasticity is insufficient, the system may degrade towards synchronous behaviour, as clients are forced to wait for available capacity.

2.4 File Servers in Operating Systems

2.4.1 Role and Functionality

A FS is a centralised OS component responsible for managing persistent data storage and providing controlled access to that data for multiple clients [34], as described in Figure 2.7. Persistence is typically achieved through disk-backed storage, allowing data to outlive the execution and exceed the memory limits of individual processes.

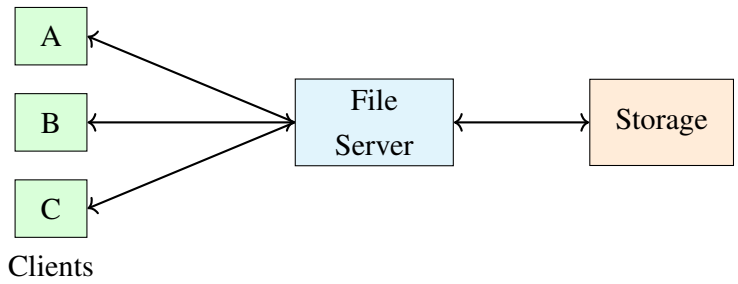

Figure 2.7: Multiclient file server structure.

By maintaining data within a shared repository, the FS facilitates implicit data sharing between clients without requiring explicit inter-process data transfer, reducing duplication and minimising communication overhead [31]. However, such a shared access model requires robust access control and isolation.

2.4.2 Abstractions

To facilitate efficient data storage and retrieval, a FS introduces multiple layers of abstraction over raw storage [34]. The primary abstraction is the *file*, which represents a named, persistent sequence of bytes, independent of its physical layout on the underlying medium. This logical abstraction enables interactions with the data as though it were stored contiguously, even if it is not. In addition to a byte sequence, each file is associated with metadata which describes its properties. These commonly include attributes such as file size, permissions and ownership. Such information is essential for enforcing access control and supporting higher-level system functionality.

Client interactions with files are mediated through a well-defined set of parameterisable operations, typically including Create, Open, Read, Write, Close and Delete as a minimal interface [33]. These operations provide a consistent and reliable mechanism for managing the file lifecycle and accessing file contents.

To decouple user processes from FS internals, these operations often reference files indirectly via a process-local 'handle', obtained through an Open operation [15]. These handles, commonly referred to as 'file descriptors' (FDs), additionally encapsulate per-process state associated with an open file instance. This state includes attributes such as the access mode (e.g. Read or Write) and the current file byte offset, reducing the need to specify this information repeatedly across operations.

Furthermore, to support client management, multiple files are often organised hierarchically within *directory structures*, providing a namespace which maps human-readable names to underlying file objects [31]. This organisation also allows easier metadata management and lookup operations for groups of files.

2.4.3 Storage and Organisation

File Layout

Unlike the logical view of a file, physical storage does not generally store files contiguously. Doing so would make storage management inefficient, as operations such as file growth could require relocating the entire file's data if the next bytes are not free. As such, most file systems instead employ a block-based storage model [33].

In this model, storage is divided into fixed-size blocks, which can be allocated to files independently. A file is therefore represented as a collection of these blocks, with metadata structures maintaining the mapping between logical byte offsets and their corresponding physical locations. Block sizes are often chosen to align with virtual memory page sizes, allowing more efficient interaction between the FS and memory [34].

While this approach improves flexibility and space utilisation, sequential data may be physically non-contiguous, potentially reducing access performance due to increased seeking costs. Furthermore, as all accesses occur at block granularity, the choice of block size represents a trade-off between space efficiency and operational overhead. Smaller blocks reduce wasted space when storing small files, but increase metadata overhead and the number of accesses required for large files.

Allocation Strategies

There are various methods through which these blocks are mapped to the contiguous file data [31].

Contiguous Allocation

The simplest strategy is contiguous allocation, where a file is stored in a sequence of adjacent blocks. This simplifies addressing and can improve access efficiency due to the linear layout, while requiring minimal metadata. An example implementation of this is shown in Figure 2.8.

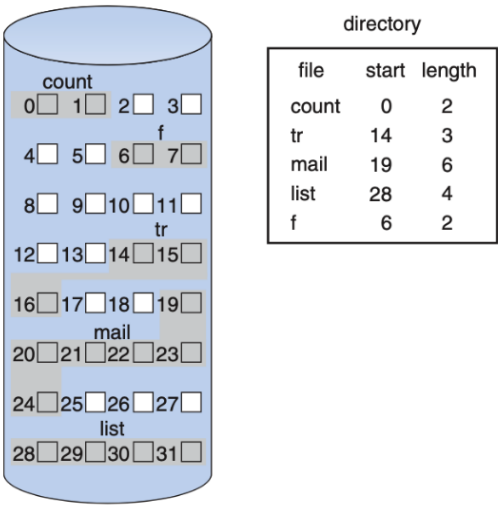

Figure 2.8: Example of contiguous block allocation. Source: [31].

This retains the same free space requirements as the logical file view, as files must occupy contiguous regions, and therefore suffers from similar limitations in file growth and susceptibility to external fragmentation. However, it improves upon this model by introducing fixed-size allocation units, allowing storage to be managed more flexibly at the block level.

Linked Allocation

Linked allocation avoids the limitations of contiguous allocation while maintaining relatively low metadata overhead per file. In this approach, each block contains a pointer to the next, as shown in Figure 2.9, allowing files to grow dynamically as any free block can be allocated. However, this structure makes random access inefficient, as locating data at a given offset requires traversing the chain of blocks sequentially.

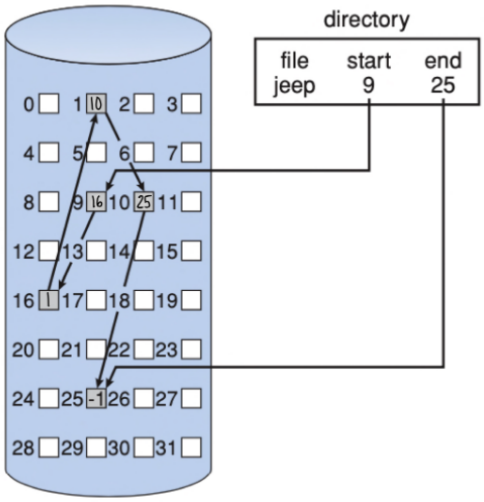

Figure 2.9: Example of linked block allocation. Source: [31].

Indexed Allocation

Indexed allocation, addresses the limitations of both contiguous and linked allocation. In this method, each file is associated with a metadata structure that stores references to its data blocks, allowing direct access to any portion of the file (Fig. 2.10).

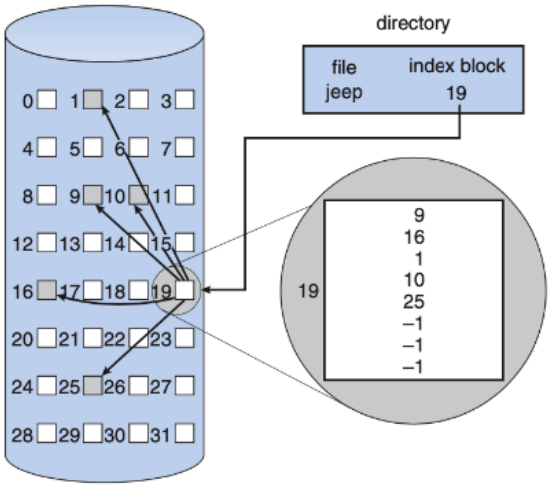

Figure 2.10: Example of indexed block allocation. Source: [31].

This enables both flexible file growth and efficient random access. However, this comes at the cost of increased metadata overhead, as additional storage and lookups are required to resolve block locations.

Metadata Organisation

Metadata may be organised either centrally or on a per-file basis [34]. In centralised approaches, such as File Allocation Table (FAT) systems [26], a single global structure stores the mappings for all files. This is achieved using a linked allocation strategy with external pointers, where each entry in the FAT table corresponds to a block and contains a reference to the next block in the file, or an end-of-file marker (Fig. 2.11).

This means per-file block metadata need only store the index of the file's starting block. While this approach is simple and centralises metadata management, it inherits the limitations of linked allocation.

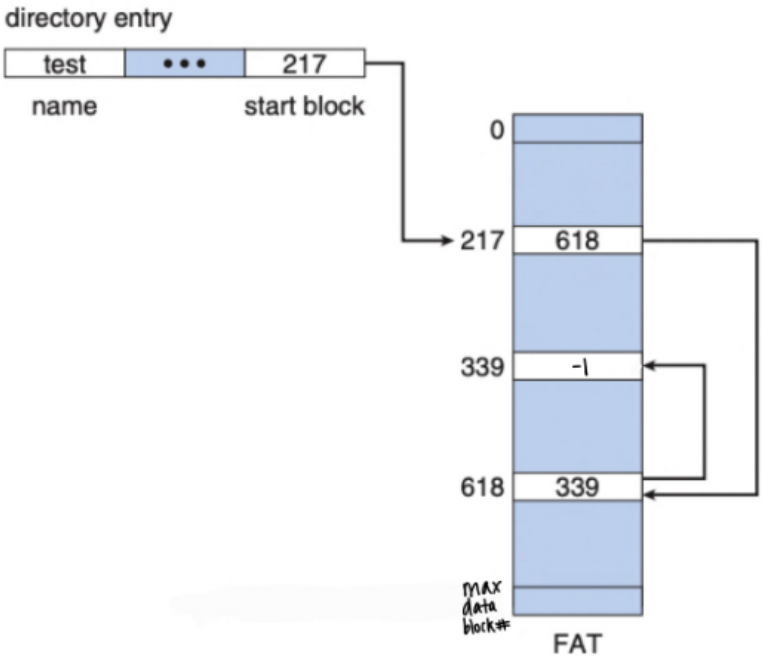

Figure 2.11: Example of FAT based file management. Source: [31].

Alternatively, per-file metadata strategies, such as inode-based policies used in Portable Operating System Interface (POSIX) compliant systems [31], associate each file with a dedicated metadata structure which stores both file attributes and references to its data blocks.

These references may be stored using a combination of direct and indirect pointers. Direct pointers reference data blocks directly, but as inodes are fixed-size structures their number is limited. To support larger files, indirect pointers are used, where a pointer, instead, references a block containing further block addresses. This is illustrated in Figure 2.12.

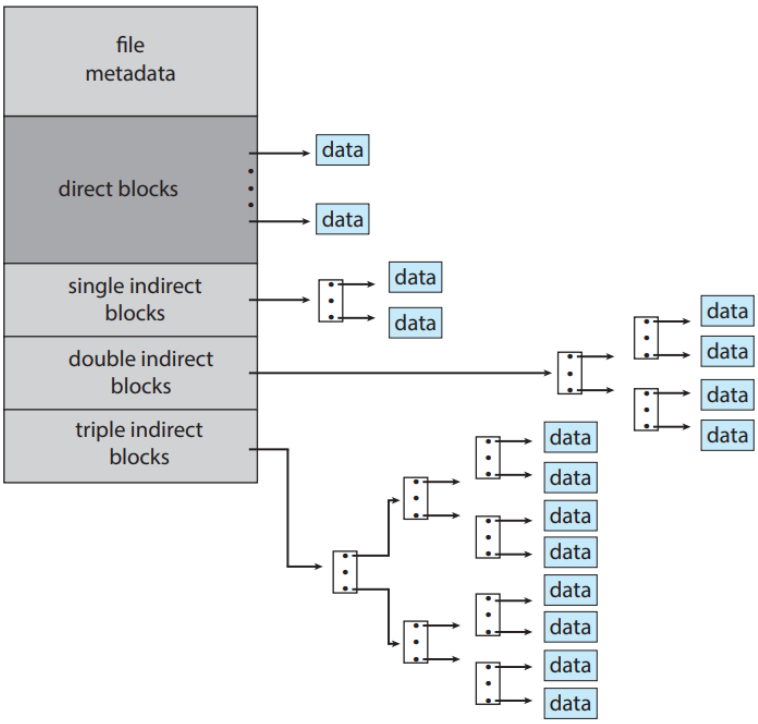

Figure 2.12: Example of inode based file management with indirect block indexing. Source: [31].

While this enables scalable file representation, it introduces additional levels of indirection, increasing the overhead required to resolve data locations.

Hybrid approaches of these are also common such as New Technology File System (NTFS)[34], which superseded FAT in Windows. NTFS employs per-file metadata structures similar to inodes, but represents file data using extents, storing ranges of contiguous blocks rather than every block individually, reducing metadata overhead for large files.

Directory Structure

A directory is a structure which stores references to files rather than file data, allowing files to be organised hierarchically through subdirectories, as illustrated in Figure 2.13. They are typically composed of a list of directory entries, which are structured records that represent either a nested file or subdirectory.

These records are used to bind a human-readable name to the corresponding entry's metadata structure [31]. This design is inherently recursive, since a directory entry can reference another directory that contains a further list of entries. Entries are then accessed via paths, where a path specifies a sequence of directory entries which must be traversed to resolve a name to its associated metadata.

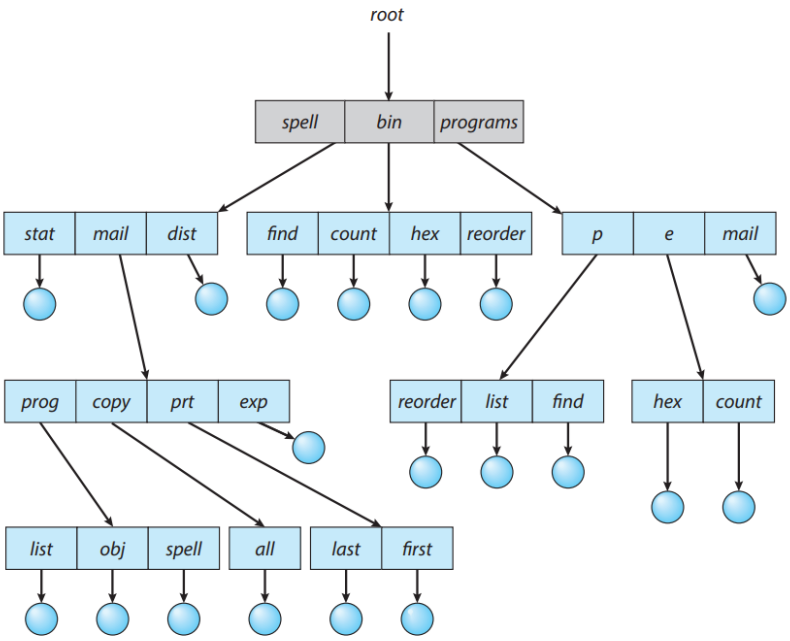

Figure 2.13: Example of a hierarchical directory structure. Source: [31].

2.4.4 Client Management

File *permissions* are required to ensure that clients can control access to their files and prevent unauthorised modification or retrieval by others [34]. At the simplest level, files may be designated as private, where only the owner has access, or public, where any client may access them.

More fine-grained systems define separate permissions for operations such as reading, writing and execution, allowing, for example, a file owned by one client to be private and restricted in terms of modification, while remaining public to other clients in terms of access. Advanced models, discussed in Section 2.2.2, allow permissions to be specified for individual clients or groups of clients, providing greater flexibility at the cost of increased complexity in storage and management.

Additionally, when multiple clients may have write access to a file, mechanisms may be employed to prevent race conditions [19] – where concurrent updates may overwrite or invalidate one another – and ensure consistency, particularly for deletion operations.

2.5 Related Work

Existing file systems and (Input/Output) I/O services are commonly implemented using synchronous request-response models [31]. While this simplifies reasoning and integration with existing software, it can limit concurrency and lead to inefficient resource utilisation. Recent developments, such as `io_uring` in Linux [5], have demonstrated significant performance improvements by enabling asynchronous I/O through submission and completion queues, reducing system call overhead and allowing multiple outstanding operations. However, this shift in execution model has introduced security concerns, as existing security mechanisms were not designed for such interfaces, leading to vulnerabilities arising from a new, larger attack surface [11].

In contrast, seL4 is a comparatively less scaled and more recent system, designed with strong security guarantees and a minimal TCB [16]. As a result, it lacks much of the legacy infrastructure that constrains the adoption of new interfaces in more established systems. Furthermore, unlike some other microkernel designs, seL4 does not provide asynchronous primitives at the kernel level, instead relying on synchronous IPC [20]. While this design performs well for individual interactions, it can limit concurrency in user-space services where operations may have multiple clients and require multiple sequential IPC calls.

Consequently, introducing asynchronous behaviour at the user level presents a promising approach to improving seL4 performance without compromising the kernel's design principles. However, there is limited existing work exploring asynchronous FS designs in seL4.

3 Design

This section describes the design of the FS core and its two interfaces. As both components significantly influence how operations are issued and processed, their design plays a key role in overall system behaviour.

3.1 System Requirements and Constraints

The design of the file server is driven by both functional requirements and the constraints imposed by Microkit and seL4. From a functional perspective, the system must provide a core set of FS operations for files, alongside support for directory structures and management of associated metadata such as permissions and file size. It must present a consistent and simple interface to clients, returning appropriate error codes in the event of invalid inputs or failure conditions.

The design must also support multiple independent clients, preserving correctness and consistency in the presence of interleaved operations. In addition, the core FS must support both synchronous and asynchronous interface models, enabling direct comparison between the two approaches. In particular, the asynchronous design should allow efficient batching of operations to reduce IPC interactions and improve overall operation throughput.

Several constraints shape the design significantly. The Microkit framework enforces a statically defined system configuration, meaning the number of clients and associated resources are fixed at system definition, constraining dynamic adaptation. For development simplicity, the system also operates without persistent storage, resulting in a purely in-memory FS. Additionally, at the time of development, Microkit was limited to execution on a single core, restricting the exploitation of parallelism. As a result, the design relies on batching and efficient communication patterns, rather than parallel execution, to achieve performance improvements.

3.2 IPC Design and File Server Interface

The FS interface defines how clients issue requests and receive results. As the interface determines how frequently, and in what manner IPC occurs, it plays a critical role in the system's performance. Two models are considered: a synchronous interface, representing a traditional baseline for FS evaluation, and an asynchronous interface, designed to reduce communication overhead through batching and decoupling of request submission and processing.

3.2.1 Synchronous Model *(Baseline)*

This model provides a simple and well-defined interface for issuing FS operations and receiving results. The communication flow is as follows:

- A client issues a single operation via a synchronous IPC call and blocks until the request is completed.
- The server receives the request, processes the operation and returns the result.
- The client then resumes execution.

In this model, it is *assumed* that any subsequent instruction may depend on the result of the request, hence the client must do no further processing until the response is received. Consequently, client execution is effectively serialised with that of the FS, as shown in Figure 3.1, even if the client and server execute on different cores. The server, therefore, only performs work when servicing requests and is otherwise idle.

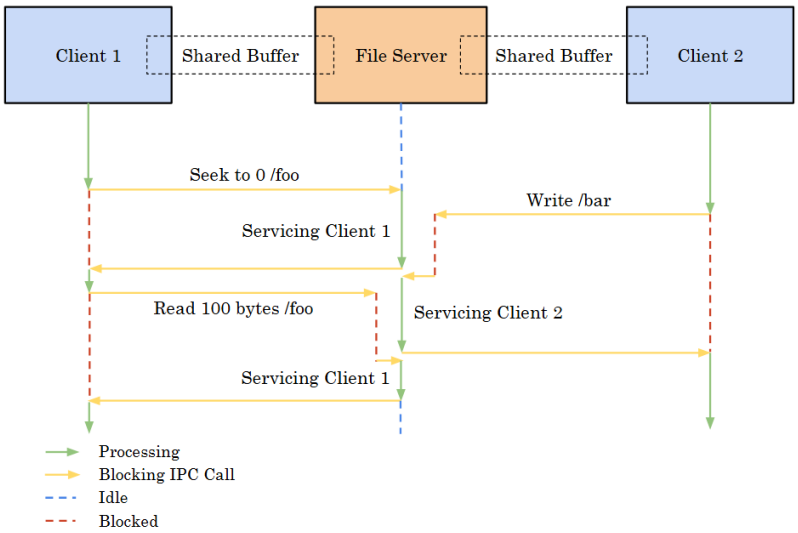

Figure 3.1: Synchronous multiclient-server interaction.

Data exchanged between the client and FS via message passing must be kept minimal to ensure that communication remains lightweight and efficient. Consequently, only the operation type and its associated parameters are transmitted directly within the IPC message, as they are small and fixed in size. Larger, variable-sized data, such as file contents for write operations, is instead transferred via a separate shared memory buffer, thereby reducing copying overhead.

As operations are strictly sequential, a single shared buffer per client is sufficient. Each request can reuse the same buffer as its contents are consumed before the next operation is issued. This simplifies both memory management and interface design, as data is always read from and written to a consistent location.

In a multiclient setting blocking effects are amplified as, after issuing a request, a client must wait for both the server to become available and its operation to complete, as shown in Figure 3.1. As a result, requests

are effectively serialised across clients. Hence, with more than two clients, the FS must maintain a queue of pending requests to ensure fair servicing.

Consequently, this model permits no concurrency in relation to the FS, and clients spend a significant portion of time blocked, particularly as the number of clients increases. Additionally, IPC overhead is incurred on a per-operation basis, making it unsuitable for workloads where large numbers of independent operations are performed.

3.2.2 Asynchronous Model *(Proposed IPC Mitigation Strategy)*

The asynchronous model replaces the synchronous request–response interaction with a non-blocking, decoupled communication approach. While this increases the complexity of the interaction and the resources required, it enables significantly greater potential for performance.

This non-blocking communication is achieved through a notification-based mechanism, rather than procedure calls. As a result, there is no requirement for a handshake or immediate response, allowing the client to issue a notification and continue execution, as illustrated in Figure 3.2. However, if the following computation relies upon the result of the requested operation, and no later processing can be moved forwards, the client will still have to wait. Yet, this model provides flexibility, enabling concurrency where possible.

When the server is idle, a notification triggers immediate processing of the corresponding request. Otherwise, as the clients do not wait, request submissions must be stored until they can be processed. As the server may be busy, this queuing cannot be managed internally by the server at the time of submission. Instead, each client is assigned a dedicated memory region shared with the server, used to queue requests. Notifications therefore carry no data, acting solely to signal that work is available. Hence, upon completing an operation, the server may review these client queues to identify and service any pending requests that may have been submitted while it was busy.

To support efficient and correct operation, this shared memory must be carefully structured. As in the synchronous design, a separation between operation metadata and operation data is maintained. However, due to the absence of message-based metadata transfer, a queue of submission entries is required in addition to per-operation data buffers. To enable multiple outstanding requests without contention, a pool of submission buffers is used rather than a single shared buffer. This pool must be bounded to balance memory usage against achievable concurrency. Therefore, alongside the necessary metadata, each submission entry must include a reference to the operation's associated buffer.

For the server to return operation results, a corresponding completion queue and set of response buffers are provided. Separating submission and completion structures avoids the need for in-place modification of request data, which simplifies reasoning about ownership and correctness. This design ensures that each queue and buffer pool has a single, clear producer–consumer relationship, reducing the risk of data corruption and avoiding unnecessary allocation of buffers for operations that do not require them.

As operations are completed in-order for each client, completion entries correspond directly to submitted operations. To acquire these responses, a client may either check the completion queue or wait for a notification from the server. Each completion entry then contains the result of the operation, including any return value or error status, as well as a possible response buffer index.

By decoupling request submission from notification, this design implicitly enables batching. A client may enqueue multiple requests before notifying the server, allowing a single IPC event to trigger the processing of multiple operations. This amortises communication overhead across a batch of operations, as illustrated by Client 1 in Figure 3.2. To maximise efficiency, the server may process all queued requests for a client before switching to another. However, this must be bounded to prevent starvation, ensuring fair servicing across clients. To maintain correctness, queue entries are marked as 'ready' explicitly by the client, rather than relying solely on queue occupancy, allowing the server to distinguish between valid and incomplete submissions.

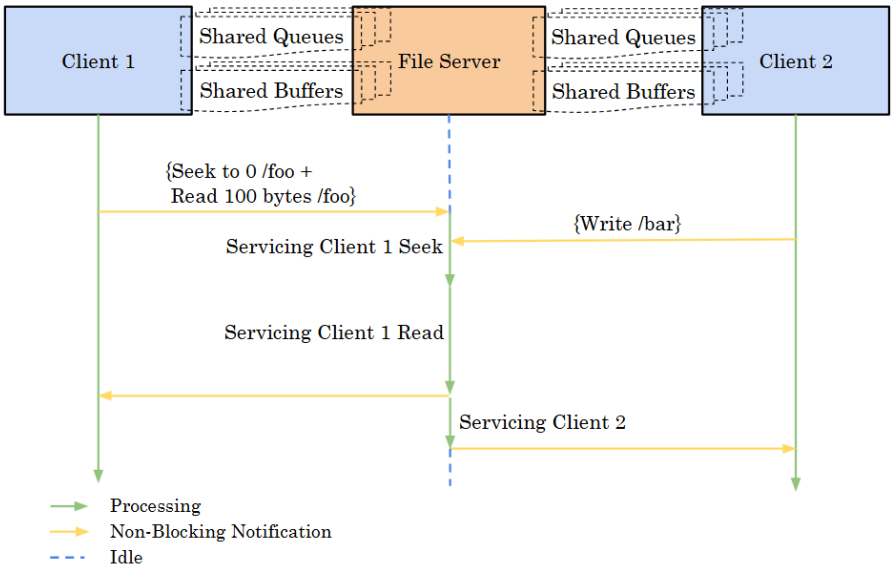

Figure 3.2: Asynchronous multiclient-server interaction.

While batching can increase the latency of individual operations, it reduces overall IPC frequency and context switching, improving system throughput. Furthermore, the decoupled nature of the interaction allows client execution and server processing to overlap where possible, reducing unnecessary serialisation and enabling more efficient utilisation of system resources.

The improvements can be understood through an analytical model of the system. Let a_n denote the time taken for a batch of n operations in the asynchronous system, then let x represent the internal processing time per operation and c represent the communication overhead of a batch request.

Therefore, the total execution time for an asynchronous batch of operations can be expressed as:

$$a_n = c + nx \tag{3.1}$$

Hence, the average time per operation is:

$$\frac{a_n}{n} = \frac{c}{n} + x \tag{3.2}$$

This shows that as the batch size increases, the communication overhead is split across multiple operations, causing the per-operation communication cost $\frac{c}{n}$ to decrease. In the limit, the average operation time approaches the internal processing cost x, indicating that communication overhead becomes negligible.

This highlights the fundamental advantage of batching, as it allows the system to approach a performance bound determined primarily by computation rather than communication.

3.3 File Server

The following subsections discuss the internal design of the FS, including its data structures and organisation. The design focuses on providing a simple and efficient structure to support the required operations, while remaining compatible with both synchronous and asynchronous interface models.

3.3.1 Architectural Overview

The FS is structured as a set of modular components, each responsible for a distinct aspect of operation. Rather being a single body of logic, functionality is decomposed into separate components for request handling, FS operations, runtime state management and storage management. Together, these provide a unified service to clients while maintaining a clear separation of concerns, in keeping with microkernel design principles. Furthermore, this modularity supports uniform error handling, allowing failures to be detected accurately and propagated naturally between components.

At the highest level, the request handling layer forms the entry point into the server, receiving operations from clients and dispatching them to the appropriate FS logic. The FS core implements the semantics of individual file operations, coordinating access to the internal data structures required to service them. Runtime state management maintains the execution state associated with active file handles, such as access modes and file offsets, while the storage layer manages the underlying in-memory representation of file contents, metadata and allocation state. This decomposition is illustrated in Figure 3.3.

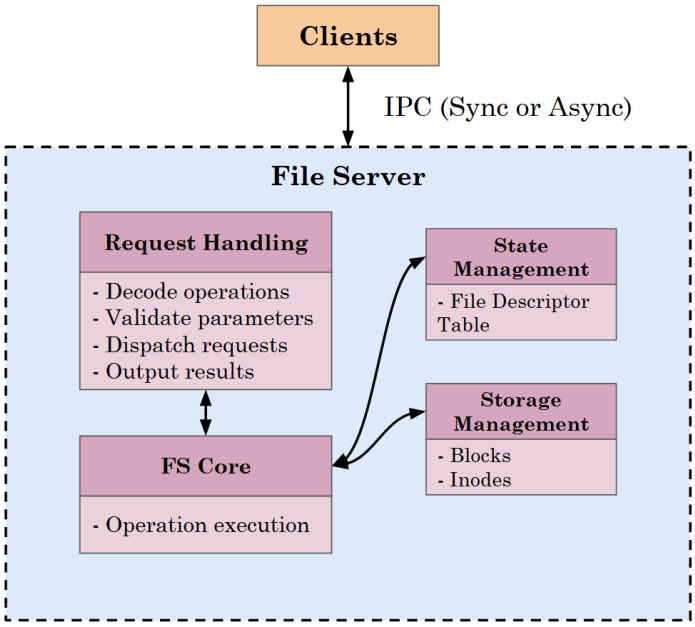

Figure 3.3: Architectural overview of the file server.

At a system level, the FS is responsible for servicing client operations, maintaining correctness of FS state, managing storage resources and coordinating access across multiple clients. Importantly, these responsibilities are independent of whether requests arrive through the synchronous or asynchronous interface, as both models share the same internal FS logic. This ensures that differences in measured performance arise from interface behaviour rather than differences in core FS operation.

This modular structure allows internal structures or algorithms to be modified without affecting the overall architecture, while supporting extensibility, as features such as persistent storage could be introduced without fundamentally redesigning the server.

Hierarchical file storage through a directory structure is supported, allowing files and directories to be organised using path-based naming. Directories may contain both files and subdirectories, enabling nested storage and traversal in a conventional tree-like structure. This was chosen over a flat namespace to support structured management and realistic FS behaviour.

The FS supports a set of operations intended to provide a sufficiently complete and practical FS interface for both functional use and evaluation, without introducing unnecessary complexity beyond the scope of the work. These include file and directory creation (Create File, Create Directory), data access (Read, Write, Seek), file lifecycle management (Open, Close, Delete), metadata and state queries (Get Size, Exists, Get Permissions, Set Permissions) and directory enumeration (List).

3.3.2 Component Design and Interactions

Significant storage management is required to support FS operations, motivating separate structures for representing data, metadata, runtime state and namespace organisation, along with mechanisms to govern their interaction.

Blocks

Blocks form the fundamental unit of data storage in the FS. They represent fixed-size regions of memory that are used to flexibly hold dynamic FS data, including file contents, directory entries and, indirect block references. Using a unified block abstraction allows storage to be allocated according to demand, rather than partitioning memory into separate fixed regions for different data types. This allows files and directories to grow as required while avoiding unnecessary reservation of space when demand is low.

While fixed-size allocation means all operations occur at block granularity, potentially wasting space when storing very small files, this was accepted in exchange for more efficient allocation management and simpler indexing and data extension. A size of 4 KiB was selected as a practical balance between storage granularity and management overhead. As the system is sufficiently modular, however, this block size remains configurable.

Blocks are managed through a Block Allocation Table (BAT), as illustrated in Figure 3.4. This maintains one entry per block, with each entry storing a flag indicating whether the corresponding block is free or allocated. This enables rapid rearrangement of FS data.

Blocks are stored within a contiguous block pool and are accessed by index, with these indices being stored within inodes.

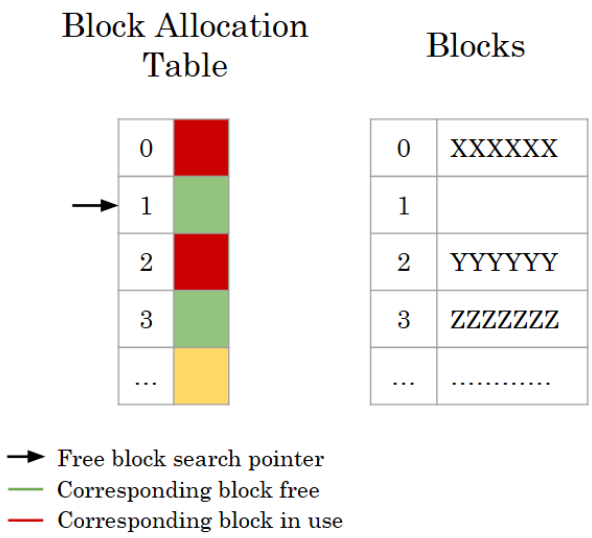

Figure 3.4: Block allocation table structure.

inodes

inodes [34] provide the central metadata structure of the file system, representing either files or directories and linking their logical identity to the underlying storage by holding both entry metadata and block references. This structure separates metadata from data storage, simplifying management of FS state, while also providing a uniform representation for FS objects, reducing special-case handling. Furthermore, resolving persistent objects independently of their names avoids repeated path-based lookup.

This metadata must hold a variety of information to allow rich and secure system functionality. To avoid requiring a separate allocation table, each inode includes a flag to signify whether it is currently in use, enabling efficient allocation and deallocation. The inode type (file or directory) is also stored, ensuring associated data is interpreted appropriately and supporting valid file traversal. Additionally, ownership and access permissions are stored to support multiple clients safely.

inodes store block references either directly or, where additional references are required, through indirect blocks, as shown in Figure 3.5. This allows files to grow beyond the capacity of direct block references while preserving a uniform model structure, although very large files may incur modest additional access overhead due to frequent indirect reference resolution.

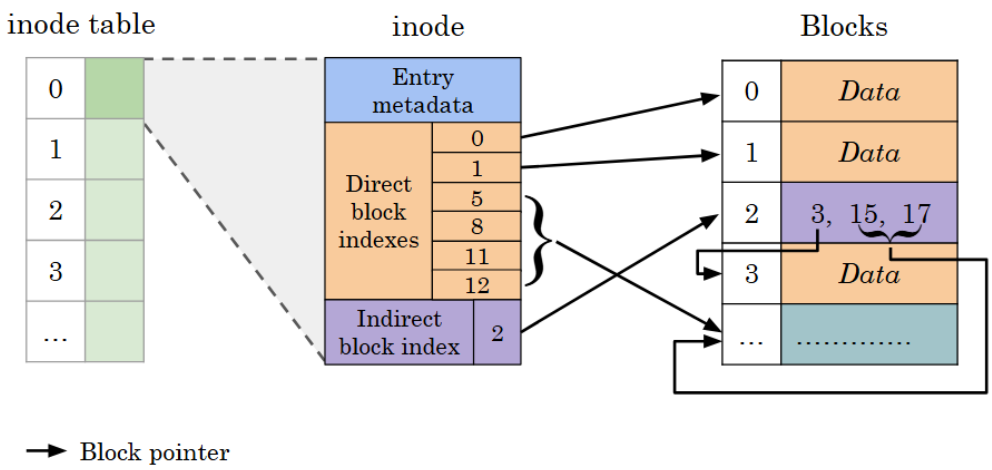

Figure 3.5: inode and block reference structure.

To aid efficient data access and ensure only initialised storage is accessed, an inode also stores the file size, indicating the extent of valid file data. Together with the block references, this supports read operations through resolution of valid file data and write operations through access to existing blocks, while determining when file extension requires allocation of additional blocks.

This design introduces an additional level of separation between FS objects and their underlying data, but this was accepted in exchange for the flexibility, uniformity and scalability the inode structure provides.

Directories

Directories provide the namespace structure of the file system, enabling hierarchical organisation through mappings from names to inode references. They are represented using the same inode and block structures used elsewhere in the file system, reusing existing abstractions rather than requiring a separate storage mechanism, thereby preserving flexibility in data use and storage efficiency.

A directory is represented by a directory inode whose associated blocks store a list of nested files and subdirectories as directory entries. Each directory entry is a structure linking an entry name to its respective inode via an index, as shown in Figure 3.6.

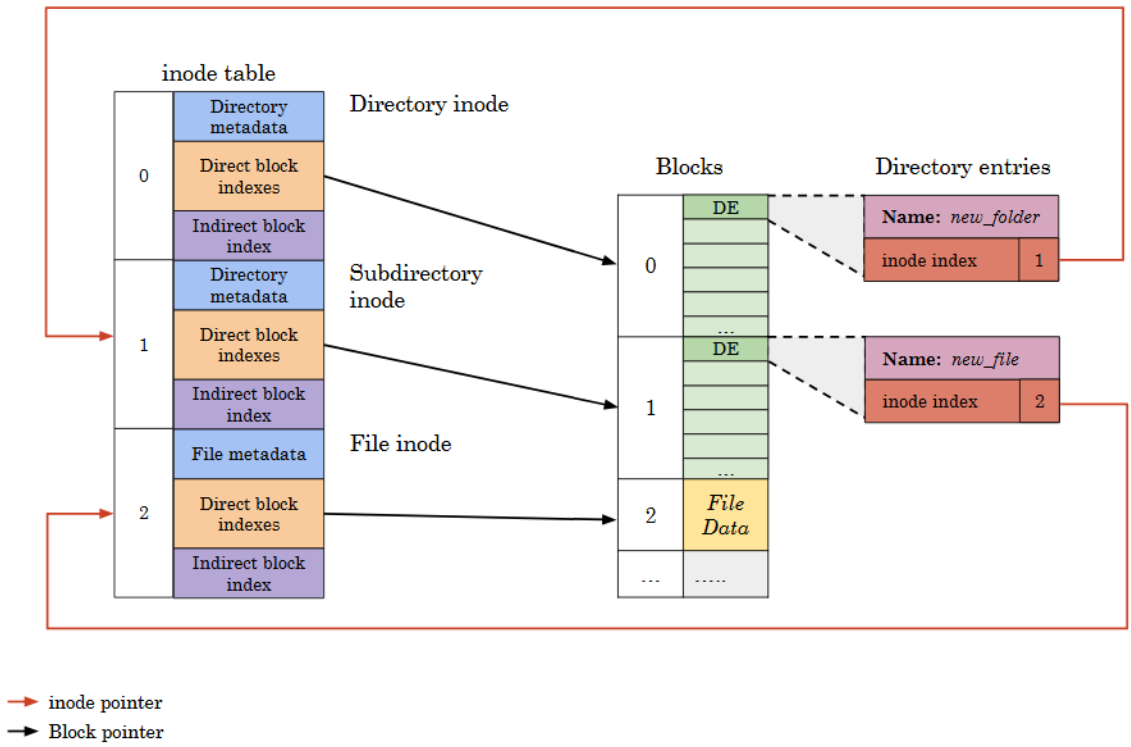

Figure 3.6: Directory structure via inodes and blocks.

This recursive structure enables hierarchical namespace organisation through arbitrary nesting of directories and files, supporting structured management beyond that possible in a flat namespace. It also provides inherent path-based access, where successive path segments are resolved by searching the entries of the current directory, descending into a child directory when a matching entry is found, until the target inode is reached or a path is deemed invalid.

For general use, a permanent root directory is created during system initialisation, upon which all files and directories are organised. Special directory entries such as '.' and '..', as well as symbolic links, are not supported, reducing namespace complexity and avoiding additional traversal cases.

This structure was chosen to support path-based access and structured file storage. However, as path resolution requires directory traversal, lookup incurs some overhead, particularly if deeply nested paths are common. Linearly scanning directories for target entries was chosen over more complex indexed lookup to reduce management overhead and implementation complexity. This was considered appropriate as the scale of the file system is relatively small and it does not impact comparison of the communication models.

File Descriptors

File descriptors maintain runtime state for open files, providing a layer of indirection between client operations and persistent file metadata. As shown in Figure 3.7, an FD links a client-visible handle to the inode representing the underlying file, while additionally storing the transient state required for continued access.

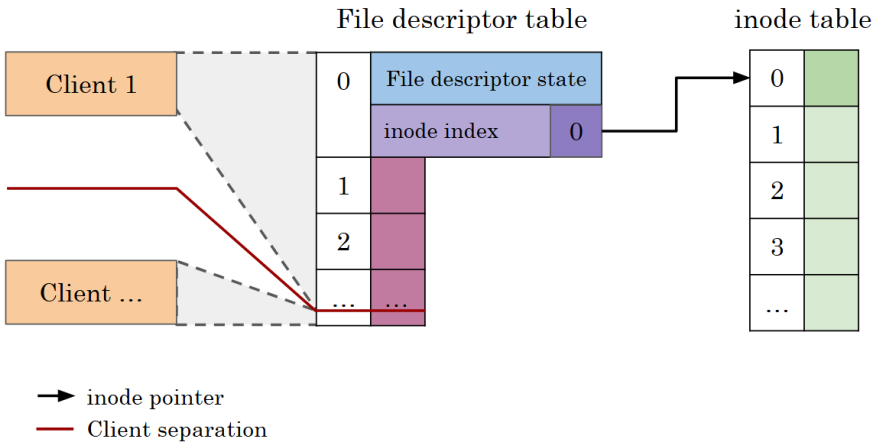

Figure 3.7: File descriptor structure.

This state includes the current file offset and the mode in which the file was opened. Separating this runtime state from inode metadata allows information specific to an active open instance, rather than the file itself, to be maintained, supporting multiclient access. This is, additionally, useful for operations such as sequential reads or writes, where file position may persist across operations and need not be re-specified.

FDs are created and returned to a client when a file is opened and are subsequently used by read, write, seek and close operations to reference the open file. This improves efficiency by avoiding path resolution for every operation, as the FD links directly to the associated inode.

This design introduces some overhead in maintaining descriptor state but this is modest relative to the performance benefits it provides. Fixed-size FD regions do, however, impose a bounded number of simultaneously open files per client.

3.3.3 Multiclient Support

Multiclient support is provided through a combination of per-client runtime state, client isolation and centralised coordination through the FS.

Per-client state is maintained through both persistent and runtime structures. Ownership and access permissions are stored within the inode metadata, allowing access control decisions to be enforced consistently regardless of which client issues a request. Ownership associates each entry with the client that created it, while permissions are represented through Read, Write and Execute flags, where an unset flag indicates that the corresponding operation may only be performed on that entry by the owner. If a flag is set, however, the operation may be performed by any client. Although, permission modification is always restricted to the owner.

Additionally, each client's runtime state is kept in a separate region of the File Descriptor Table (FDT), with a local maximum number of open files. This ensures that one client's open file state cannot interfere with that of another. This separation provides isolation even when multiple clients access shared resources, as multiple clients may access the same underlying file, each through its own client context.

Consistency of shared resources is preserved through centralised mediation by the FS; all file operations pass through the server and are serviced atomically. A particular case of shared resource consistency arises when one client deletes a file that remains open by others. In this case, deletion is deferred until the final client closes the file, ensuring that active references remain valid and preventing removal of data still in use.

3.3.4 Request Processing Flow

FS requests follow a common processing path regardless of operation type to reduce duplicated logic, ensure consistent validation across operations and simplify reasoning about correctness within the FS. Once a request is received by the FS, it is first decoded to determine the requested operation and extract any associated parameters. Basic validation is then performed, such as verifying the operation code is recognised, the required parameters are present and checking that any referenced file handles or paths are correctly formed.

Following validation, the request is dispatched to the appropriate FS logic. The general flow is:

- Service operation
- Access internal structures
- Update state if required
- Generate response

For example, the read operation follows this general structure by validating the supplied file handle is valid, consulting the open file state to determine the current offset, resolving the relevant storage blocks containing the requested data and returning the result while updating the file offset.

4 Implementation

This section describes the implementation of the FS, building upon the designs presented in the previous section.

4.1 Development Environment and Tools

The system was implemented in C using version 2.0.1 of the Microkit framework for seL4 [6]. The build process was managed using a Make-based system, coordinating compilation, linking and image generation.

All development and testing was conducted in an emulated environment using QEMU, targeting the `virt` generic virtual machine model [25]. This allowed rapid iteration without requiring physical hardware.

Debugging and verification were primarily performed using logging via serial output, enabling inspection of system behaviour during execution. Additional support tools included Git [8] for version control and reproducibility of development progress.

4.2 Microkit Framework Setup

Microkit provides a declarative mechanism for defining execution, memory and IPC structures via an XML-based description. A single client example of this system definition is shown in Listing 4.1.

Each PD represents an independent user-space process with its own address space and execution context. Hence, separate PDs were defined for the FS and each client. The relevant program images were assigned to each domain and memory regions were declared and mapped into their address spaces at specified locations. A dedicated memory region for the FS state was declared and mapped solely to the server. Additionally, for each client, regions to hold shared communication data, such as buffers, were declared and mapped into both the FS and the corresponding client.

Alongside this shared memory, IPC between PDs was established using channels, as detailed in subsection 2.2.4, with each client being connected to the FS. By defining memory regions and notification channels through Microkit, capability management of all objects is handled automatically by the framework, significantly reducing the complexity of managing and securing IPC.

```
     <!-- File Server Memory Region -->
    <memory_region name="fs_memory" size="0x10133000" />

    <!-- File Server Protection Domain -->
    <protection_domain name="file_server" priority="1" >
        <program_image path="file_server.elf"/>

        <map mr="fs_memory" vaddr="0x30000000" perms="rw" cached="true"
          setvar_vaddr="fs_memory_base"/>

        <map mr="client_0" vaddr="0x40133000" perms="rw" cached="true"
          setvar_vaddr="clients_memory_base"/>

    </protection_domain>

     <!-- Client Memory Regions -->
    <memory_region name="client_0" size="0x81000" />

    <!-- Client Protection Domains -->
    <protection_domain name="client_0" priority="0" >
        <program_image path="client0.elf"/>
        <map mr="client_0" vaddr="0x30000000" perms="rw" cached="true"
          setvar_vaddr="fs_data_base"/>
    </protection_domain>

    <!-- Client Communication Channels -->
    <channel>
        <end pd="file_server" id="0"/>
        <end pd="client_0" id="0" pp="true"/>
    </channel>
```

Listing 4.1: Microkit system definition.

To support varying workloads with this static configuration, a script was developed to generate the system description for a configurable number of clients automatically.

Microkit also requires specification each PD's priority. This determines the order in which they are scheduled by the seL4 kernel, directly influencing system responsiveness and fairness. The FS was, therefore, assigned a higher priority than the clients to ensure that requests were serviced promptly. Clients were assigned equal priorities to each another to maintain fairness across request sources.

4.3 Interface

4.3.1 Synchronous Server Model

Being the simpler of the two models, this was implemented first to validate the correctness of the FS.

Client-Server Communication

Microkit's protected procedure call (`microkit_ppcall`) provides both the blocking semantics and message passing required within a single operation. It transfers control from the calling thread to the callee, suspending the caller until the operation returns.

In addition to control transfer, `microkit_ppcall` supports the transmission of up to 64 words of data in both the request and response. As file names and data are handled via shared buffers, this capacity is sufficient to encode the operation code and associated parameters or return values. Message size is configurable, allowing each operation to transmit only the required data. Consequently, the server must validate the message size after decoding the operation to ensure all necessary parameters are present.

The client request flow proceeds as follows:

- The client writes any required data (such as file names or file contents) into its shared buffer.
- A message is constructed containing the operation code and relevant parameters.
- The client invokes the FS via `microkit_ppcall` on its dedicated channel, passing the constructed message.
- The client thread is automatically suspended until the operation completes.

When control is passed to the server, execution begins at a designated entry point, defined as the function:

```
microkit_msginfo protected(microkit_channel channel, microkit_msginfo msginfo)
```

Since all clients share this entry point, the `channel` parameter is used to identify the calling client. These channel identifiers are statically assigned in the Microkit system configuration and cannot be modified at runtime, ensuring that requests are correctly attributed.

Alongside extracting the operation code and parameters from the message the server may also access the client's shared buffer. By arranging the client buffers sequentially the server can treat them as a single array and index into it directly using the client's channel identifier to locate the appropriate buffer.

Once the operation is complete, the server constructs a response message containing the result code and any requested values and returns it from the protected function. This automatically delivers the response to the corresponding client and resumes the client thread.

API

To simplify usage and ensure consistent interaction with the FS, the communication and buffer management logic is encapsulated within a set of wrapper functions. These abstractions hide the details of message construction and extraction, buffer usage and IPC invocation.

To reduce the number of parameters required for these library calls, each operation has a specific function that can be called, which accepts only the parameters required for that operation and returns an operation unique `struct` for access simplicity.

For example, the `send_open_file_request` function takes the desired access mode, a pointer to the file name and the address of the client's shared buffer. It writes the file name into the buffer, constructs a new message containing the Open operation code and mode parameter, and invokes the FS. Upon completion, it forms and returns a `result_code_file_id struct` from the FS response.

4.3.2 Asynchronous Server Model

Client-Server Communication

Rather than transferring control directly to the FS for each operation, the asynchronous model implements communication through shared memory and notification-based signalling. Clients submit requests by writing to shared data structures and continue execution until they explicitly check for completion.

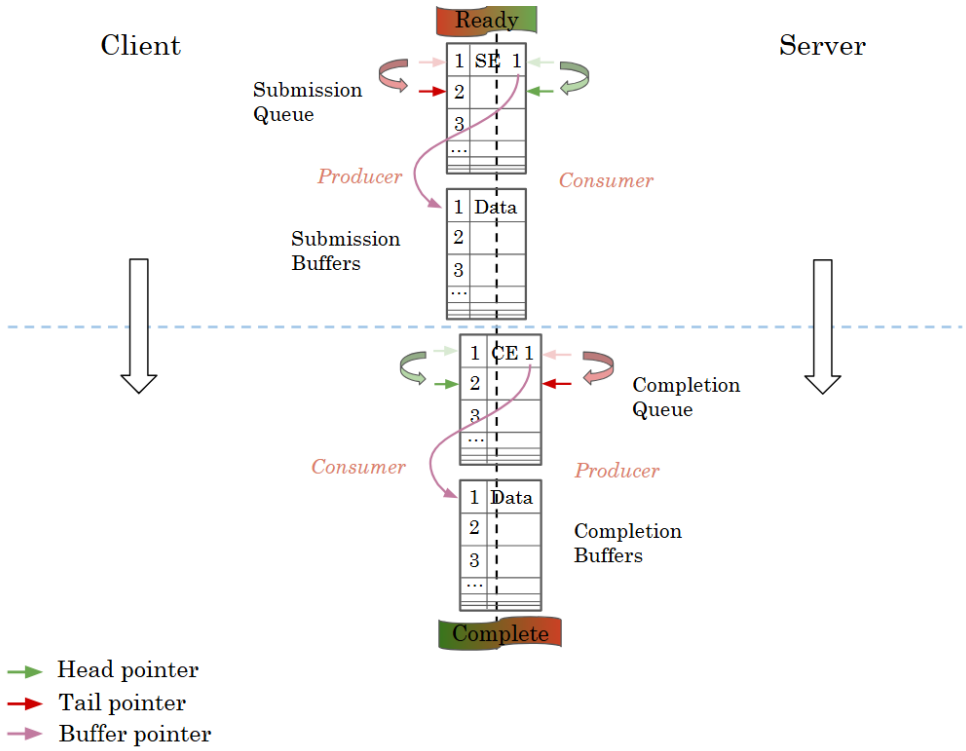

Figure 4.1: Asynchronous client-server communication via shared queues and buffers.

Each client is assigned a submission queue and a completion queue for managing requests and responses, and corresponding buffer pools for transferring file-related data. Submission buffers are used to store request data such as write contents, while completion buffers hold data returned by the server, such as read results. Allocation tables are maintained for both buffer pools to manage allocation. A full operation flow example is displayed in Figure 4.1.

For operations requiring data transfer, the client first acquires a submission buffer by locating a free entry in the allocation table, as shown in Figure 4.2. If no buffer is available, the client must wait until its previously issued operation – or operations, when batching – is complete and their resources are released.

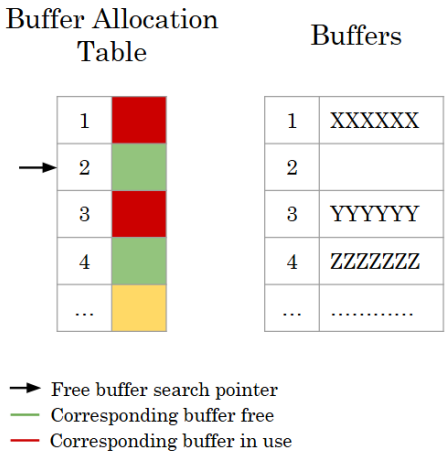

Figure 4.2: Buffer management in asynchronous communication.

Once a buffer is acquired, the client writes the required data and constructs a submission queue entry describing the requested operation, including its parameters and the associated buffer index. The structure of this entry is shown in Listing 4.2.

```
struct submission_queue_entry
{
    operation_t operation_code;
    uint32_t parameter1;
    uint32_t parameter2;
    size_t buffer_index;
} typedef submission_queue_entry_t;
```

Listing 4.2: Submission queue entry structure.

Submission and completion queues are implemented as fixed-size circular buffers, each maintaining head and tail pointers. Using fixed-size entries allows direct indexing via the head and tail pointers.

Entries are added at the tail and consumed from the head, with the producer updating the tail pointer after submitting new entries and the consumer updating the head pointer after removing entries. Before adding or removing entries, the state of the queue must be checked to ensure it is not full or empty, respectively, by comparing the head and tail pointers. As a result, these pointers must be shared between the client and the server.

As Microkit only allows memory sharing at page granularity, with a minimum mapping size of 1 KiB, each client is allocated a contiguous region of shared memory with the FS, which holds all the necessary data structures, simplifying the static system description. This memory is organised as a single structured layout, as defined in the FS API. This also allows the relative sizes of internal structures to be adjusted without affecting the overall interface. The structure is shown in Listing 4.3.

```
struct client {
    size_t submission_queue_head;
    size_t submission_queue_tail;
    size_t completion_queue_head;
    size_t completion_queue_tail;
    client_flags_t flags;
    submission_queue_entry_t submission_queue[MAX_QUEUE_ENTRIES];
    completion_queue_entry_t completion_queue[MAX_QUEUE_ENTRIES];
    bool submission_buffer_table[NUMBER_OF_BUFFERS_PER_CLIENT];
    bool completion_buffer_table[NUMBER_OF_BUFFERS_PER_CLIENT];
    buffer_t submission_buffers[NUMBER_OF_BUFFERS_PER_CLIENT];
    buffer_t completion_buffers[NUMBER_OF_BUFFERS_PER_CLIENT];
    uint8_t padding[CLIENT_DATA_PADDING_AMOUNT];
} typedef client_t;
```

Listing 4.3: Client shared data structure.

Similarly to the synchronous setup, all client memory regions are of uniform size and arranged sequentially, so the server can index them directly using the client's channel identifier. Encapsulating all client state within a single structure simplifies function interfaces, as only a pointer to this structure needs to be passed, enabling a modular implementation of the file system.

Once the desired number of submission entries have been added, the client sets its ready flag and signals the server using Microkit's `microkit_notify` function. This sends a notification along a statically defined channel without blocking the client, allowing it to continue issuing further requests or performing other work. The ready flag allows the server to efficiently check if a client requires servicing and ensures that only clients which have explicitly indicated pending work are serviced.

If the server is idle, receiving a notification causes its thread to be scheduled. Execution begins at the designated entry point:

```
void notified(microkit_channel ch)
```

The `channel` identifier is used to determine which client issued the notification. The server then checks that the client's submission queue is valid and begins processing any pending entries.

To service an operation, the server consumes the next entry in the submission queue and extracts its parameters. If the operation requires a completion buffer, an attempt is made to acquire one via the same mechanism as the submission buffer. If successful, the operation is performed and any result data is written to the allocated buffer.

A completion queue entry is then constructed containing the result code, any return values and the buffer index. This entry is added to the completion queue. The structure of this entry is shown in Listing 4.4.

```
struct completion_queue_entry
{
    uint8_t return_code;
    uint32_t result1;
    uint32_t result2;
    size_t buffer_index;
} typedef completion_queue_entry_t;
```

Listing 4.4: Completion entry structure.

Once the operation is complete, the submission buffer is released by marking its entry in the allocation table as free, as its contents have been consumed. The server then continues processing entries from the submission queue until it is empty or a predefined per-client batch limit is reached.

When processing is complete, the server updates the client's flags to indicate that results are available and that no outstanding requests remain (if processing was not terminated early), before sending a notification to wake the client if it has become idle.

On the client side, once notified or after explicitly checking for completion, the client removes entries from the completion queue and processes the results. After consuming any returned data, it releases the corresponding completion buffers by updating the allocation table, freeing them for future operations.

API

Much of this communication complexity is abstracted, with dedicated wrappers for each operation providing a simple and consistent interface for interacting with the FS.

For example, send_open_file_request takes a file name, the desired opening mode and a pointer to the client's shared state structure. It first attempts to acquire a free submission buffer, failing if none is available, and writes the file name into the buffer. Using this buffer index and the supplied parameters, it constructs a submission_queue_entry_t, inserts it into the submission queue if space is available and advances the submission queue tail. An appropriate result code is then returned to the client to indicate whether submission was successful.

As request submission is non-blocking, additional helper functions are required both for notifying the server and for collecting results. Two notification mechanisms are provided. The first uses microkit_notify to signal the FS and then returns immediately, allowing the client to continue execution when further, independent work is available. The second is intended for situations where subsequent processing depends on completion of a submitted operation. In this case, microkit_ppcall is used to suspend the client thread until the server has processed the request, similarly to the synchronous system. This is more efficient than busy-waiting when no further useful work can be performed. Both the notified and protected server entry points then delegate to the same service_client function, ensuring that request handling remains identical regardless of how servicing was triggered.

If the client does not block when notifying the server, it must later check whether results are available. This can first be done by inspecting the complete flag. However, if multiple operations were submitted as a batch, the flag may be set before all expected results have been completed, in which case the completion queue head and tail pointers must also be compared. As no useful work may remain while waiting for these results, dedicated wrapper functions were implemented to either busy-wait on these conditions or yield execution, returning only once the requested operations have completed.

Results are then retrieved in order using get_next_completion_entry, with buffer management handled by dedicated helper functions.

4.4 File Server

This section details the realisation of the FS design, covering implementation of its internal structures and the mechanisms used to handle FS operations.

4.4.1 Data Structures and Access Mechanisms

The server is allocated a large section of memory for internal use during Microkit initialisation, which is then partitioned using statically defined constants into the internal data structures described in this section. This partitioning therefore defines key system scale properties.

For example, increasing inode capacity allows more entries to be represented, but reduces available block space and therefore the potential size of stored file data. As this partitioning is performed within the FS itself, the system may be reconfigured easily.

Blocks

Blocks are implemented as fixed-size regions within a contiguous memory pool, with allocation managed through the BAT. This is realised by structuring block memory as an array of elements of size `BLOCK_SIZE`. The number of blocks which fit within this region is recorded and a Boolean array of equal size is created to form the BAT. Each block is therefore associated with a corresponding index, which is used both to access block data and its BAT entry, directly.

As all blocks share the same representation, any block may store file data, directory entries or indirect block indices. Allocation for all such uses is performed through a linear scan of the BAT for an unset entry indicating a free block, while deallocation simply marks the corresponding BAT entry as free.

inodes

inodes are implemented as fixed-size metadata structures, each representing a FS object and linking it to its associated storage blocks. To enable direct access, these are stored contiguously in an inode table. The inode structure is shown in Listing 4.5.

Blocks are referenced both directly and through single indirection. Space for eleven direct block references was chosen to minimise inode size while allowing reasonably large files and directories before indirect access is required, providing 44 KiB of directly addressable storage. For simplicity, and given the intended scale of the file system, only one indirect block is supported. This still allows substantial file growth, as a single indirect block may hold up to 128 additional block references. These capacities are defined through statically configured constants, allowing simple modification of system limits if requirements change.

```
struct i_node
{
    size_t entry_size;
    size_t blocks_used;
    size_t block_indices[DIRECT_BLOCKS_PER_INODE + 1];
    uint8_t mode;
    uint8_t owner_id;
    uint8_t padding[2];
} typedef i_node_t;
```

Listing 4.5: inode structure.

The `entry_size` field stores the exact number of bytes of file data, or the number of entries, within a directory which is returned when queried through the get size operation. In contrast, `blocks_used` limits reads and indicates when additional blocks are required for writes. This must be stored separately from `entry_size`, as directory entries may be deleted, meaning a directory's allocated blocks need not be full, so the number of blocks which must be scanned to reach all child entries cannot be inferred from `entry_size` alone. This, additionally, allows excess blocks to be identified and freed through defragmentation.

To maximise block availability block index fields are initially empty, other than the first direct block, as every entry is allocated an initial block on creation to ensure immediate storage availability. Additional block indices are populated only when growth is required. As long as the number of allocated blocks does not exceed the maximum number of direct pointers, newly allocated block addresses can be stored directly in the inode. Once this limit is exceeded, an indirect block must be allocated and its address stored in the inode's indirect block field, with any further block addresses then stored in the indirect block rather than the inode itself.

To reduce space overhead, the 'deletion required' flag, 'in-use' flag, inode type and permissions bits are packed into a single byte, which is set and read using bit masks, as shown in Listing 4.6. Padding is also included to support efficient alignment of inode entries in memory.

```
i_node->mode = IS_DELETED_BIT << 5 | PERMISSION_BITS << 2 | DIRECTORY_BIT << 1 | IN_USE_BIT;
```

Listing 4.6: inode mode field bit packing.

Directories

Directories are implemented through directory inodes whose associated blocks store directory entries, realising the hierarchical organisation described in the design. The directory entry structure is illustrated in Listing 4.7.

```
struct directory_entry
{
    unsigned char name[MAX_NAME_LENGTH];
    uint32_t i_node_index;
} typedef directory_entry_t;
```

Listing 4.7: Directory entry structure.

By storing both the entry name and corresponding inode index, directory entries encode the namespace structure of the file system. To simplify entry management and maintain space and lookup efficiency, file and directory names are constrained to a fixed maximum length. Additionally, to ensure all created entries are accessible, names must not be empty, contain invalid characters or duplicate another entry within the same directory.

This representation enables resolution of entries through path-based lookup, (Fig. 4.3). A path is represented as a sequence of directory names to traverse, terminating in the target file or directory. Path segments are delineated by the '/' character, with all paths beginning at the root directory, denoted by a leading '/'. The root directory is initialised at system startup as inode 0, with all entries contained beneath it.

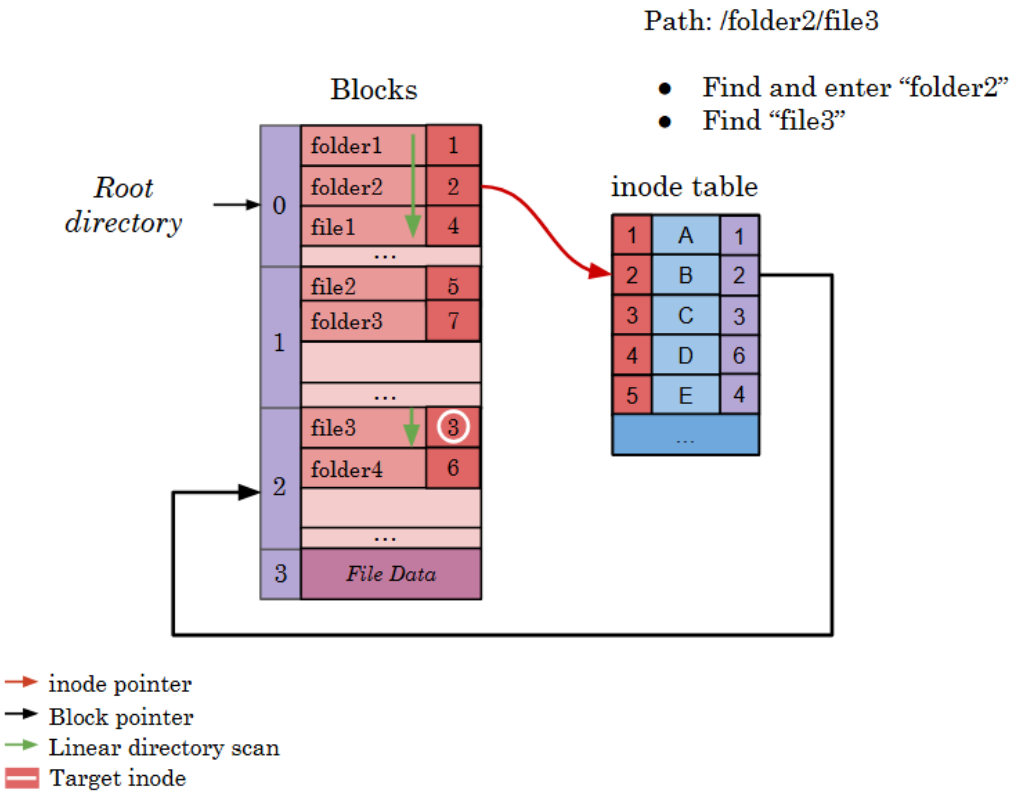

Figure 4.3: Path-based lookup through directory traversal.

Path resolution proceeds through successive traversal of directory entries. For each path segment, the entries of the current directory are searched via a linear scan until a matching name is found. If a match is found and the segment is not the final component of the path, the corresponding inode is accessed and its blocks are searched to continue traversal. However, this continued traversal only occurs if the client has Execute permissions for the directory to be entered, otherwise a permission denied error is returned. If traversal through a non-directory entry is attempted, the path is deemed invalid. The traversal is implemented recursively, which aligns naturally with the tree structure of the search space.

When the final segment is reached and a matching entry is found, the inode index stored in the corresponding directory entry is returned. If no match is found at any stage, the entry is deemed nonexistent.

File Descriptors

FDs are implemented as runtime structures within per-client regions of the FDT, maintaining open-file state for subsequent file operations. These link a client-accessible handle to a file and its current open state. For minimal abstraction and overhead, the file handles returned to clients are simply the index of the FD within that client's FDT region. A file's open instance may therefore be retrieved by direct indexing into the FDT using the client ID and FD handle.

An FD is allocated by locating a free entry in the FDT through a linear scan of the descriptor entries. To simplify this check, an unused entry is indicated by an inode index value of `UINT32_MAX`, which is otherwise invalid. When a file is closed, the corresponding FD is released by restoring this sentinel value.

FDs are realised as structs holding open-state metadata and the associated file inode index, as illustrated in Listing 4.8.

```
struct file_descriptor
{
    uint32_t i_node_index;
    size_t cursor_position;
    file_open_operations_t valid_operations;
    uint8_t padding[3];
} typedef file_descriptor_t;
```

Listing 4.8: File descriptor structure.

By storing the inode index directly, the FS may resolve the associated inode from an FD in constant time, rather than performing a search. When operations are performed through an FD, the relevant state is supplied automatically where required, for example the cursor position during reads. The `valid_operations` field is represented as an `enum` value, as shown in Listing 4.10, enabling operation validation while maintaining readability.

```
typedef enum {
    READ_OP = 0b01,
    WRITE_OP = 0b10,
    READ_WRITE_OP = 0b11
} file_open_operations_t;
```

Listing 4.9: File open operations enum.

4.4.2 Operations

These data structures and their associated mechanisms are used to implement the FS operations defined in the design. Each operation is implemented as a function which performs the necessary checks, manipulates the relevant data structures and returns appropriate results or error codes.

Namespace Mutation

The organisation of the FS is managed through Create and Delete operations.

Create

A creation operation takes as parameters the path of the entry to create, whether the entry is a file or directory and the permissions to assign to it. The first step is to locate the inode of the target entry's parent directory, allowing the new entry to be initialised and added as a child of that parent. This ordering allows path validation to occur inherently during traversal, avoiding a separate validation stage and preventing the need to undo partial initialisation should the path prove invalid.

Once the parent directory has been reached, the remaining path consists only of the desired entry name. If this name is valid, and the calling client holds Write permissions on the parent directory, an inode and a starting data block are allocated. If both allocations are successful, the inode is populated with the supplied metadata and the allocated block index.

A directory entry is then formed from the entry name and allocated inode index and inserted into the parent directory. This is achieved by scanning the parent's blocks for free space. If none exists, a new block is allocated, linked to the parent and used to store the new entry, with the parent's size updated accordingly.

Additionally, if creation of a file completes successfully, the library wrapper automatically triggers an Open operation for the issuing client, as the file is likely to be used immediately. Consequently, an opening mode must also be provided during file creation.

Delete

Deletion requires removal of both the target inode and its reference within its parent directory. This requires locating both the target inode and the inode of its parent, achieved through the same traversal mechanism used for lookup, extended to additionally retain the parent inode index. Therefore it takes the target path as the sole operation parameter.

Once the parent inode is located, its blocks are scanned linearly until the target's directory entry is found, which is then marked not in use. Before the target inode may be deallocated, any associated data blocks must also be freed. For files, this involves marking all directly referenced blocks, any indirectly referenced blocks and the indirect block itself, as free within the BAT.

For directories, deletion is recursive. As simply freeing a non-empty directory's blocks would lose references to nested entries, all contained files and subdirectories must first be deleted. This is achieved by scanning the directory's blocks and invoking the appropriate deletion function recursively for each contained entry. Only once all contents have been removed safely are the directory's own blocks deallocated.

Deleting a file additionally causes it to be closed automatically for the issuing client, avoiding an additional client operation. To preserve multiclient correctness, however, files are only fully deleted once all clients have closed their handles to them. Their directory entry is removed immediately, preventing it being opened again and allowing wider directory deletion, but the inode and associated data are retained until no descriptors referencing that inode remain.

This is implemented by scanning the FDT for references to the target inode during deletion. If any remain, a deletion-pending flag is set within the inode rather than deallocating it immediately, which Close operations must monitor.

Runtime State Management

The management of client specific data is done through Open, Close and Seek operations.

Open

To open an FD for a file, the target inode must first be resolved through the traversal function, with the file path therefore being supplied as a parameter. Alongside this, an opening mode is provided to specify which operations may be performed through the resulting FD. This format is detailed in Listing 4.10.

Once the inode is acquired, the calling client's permissions are validated according to the requested opening mode. If permitted, the client's FDT is scanned for a free entry. If one is found, an FD containing the inode index, operation mode and initial file offset of 0 is placed at that location. The index at which this entry is stored is then returned to the client as the handle used to reference the file in subsequent operations.

```
typedef enum {
   READ_OP = 0b01,
   WRITE_OP = 0b10,
   READ_WRITE_OP = 0b11
} file_open_operations_t;
```

Listing 4.10: File opening mode enum.

If no free FD entry is available, an error is returned indicating the client has reached its maximum number of open files.

Close

To close an FD, a client passes the corresponding handle. The Close operation first verifies that this handle is valid, by ensuring it falls within the range of zero to the maximum number of concurrent FDs permitted per client. If valid, the corresponding entry in the FDT is marked not-in-use.

The operation must also inspect the deletion-pending flag of the inode referenced by that FD. If this flag is set, the system checks whether this was the final open handle to the file by scanning the full FDT for any remaining references to that inode. If none remain, the inode entry is passed to the deletion routine for final removal.

Seek

The Seek operation allows a client to change the file offset for an open FD. It takes the FD handle and a new offset as parameters. The operation first validates the FD and ensures the new offset is within the bounds of the file. If valid, the FD's offset is updated to reflect the new cursor position.

Data Movement

Access and modification of file data are achieved through Read and Write operations. Rather than operating on paths, both operations require the target file to already be open and referenced through an FD handle.

Read

Alongside the target handle, the Read operation takes the requested number of bytes to be read. If this exceeds the client's buffer size, the request is limited and the client notified through the return code.

If the FD is valid, its opening mode is checked to ensure the Read bit is set. The associated inode is then resolved through the index stored in the FD and the current file offset is used to determine both the block at which reading begins and the offset within that block. This is calculated through integer division and remainder operations on the block size.

The operation then reads data from the resolved block, either through direct or indirect references as required, copying data into the client buffer until either the requested number of bytes has been read or the end of file is reached. If the end of a block is encountered first, the next referenced block in the inode is resolved and reading continues. Reaching the end of the file before satisfying the full request size is returned as a partial success.

Once complete, the FD's offset is updated to reflect the new cursor position. This updated offset, together with the number of bytes read, is returned to the client alongside the return code.

Write

The Write operation also takes an FD handle and the number of bytes to write, validating both similarly to Read. A buffer containing the data to be written is also required, though this may be supplied either implicitly or explicitly depending on whether the synchronous or asynchronous interface is used.

As with the Read operation, the starting block and offset within that block are calculated. Data from the client buffer is then copied into the file from that position onwards. If the end of a block is reached, writing continues into the next referenced block where one already exists.

If writing reaches the end of the file and additional storage is required, further blocks are allocated, linked into the inode and used to continue the write. Once complete, the inode size metadata and FD offset are updated and the new offset and number of bytes written are returned to the client. A partial write occurs only if additional blocks are required but no further blocks are available for allocation.

Metadata Access and Modification

Metadata access and modification operations are implemented through traversal and inspection of inode and directory structures, with updates applied where permitted.

Get Size and Get Permissions

These operations each take a single target path as a parameter and utilise the traversal function to resolve the target inode. Once the inode is acquired, it is validated that the calling client has the necessary Read permission. If successful, the appropriate metadata field is extracted from the inode and returned.

Set Permissions

This operation follows the same approach, but additionally takes a new permission code to apply, represented as a bit code constructed from the `enum` values shown in Listing 4.11. This allows permissions to be represented compactly within the inode, while still supporting efficient validation through bitwise operations.

The permissions field in the inode is updated to this value only if the calling client ID matches the ID stored in the owner field; otherwise, a permissions error is returned.

```
typedef enum {
   PERM_PRIVATE = 0b000,
   PERM_READ = 0b001,
   PERM_WRITE = 0b010,
   PERM_EXECUTE = 0b100,
   PERM_PUBLIC = 0b111
} permissions_t;
```

Listing 4.11: Permissions bitmask enum.

List

The List operation similarly acquires the inode of the target path through traversal, but result generation is more involved than reading a single inode field. It first verifies that the target inode represents a directory (failing otherwise) and checks that the calling client holds the required Execute permission. It then iterates through the directory's blocks, appending the name of each in-use directory entry to a result buffer, halting addition if continuing would exceed the predefined, global client buffer size.

Exists

This operation takes a single target path as a parameter and uses the traversal function to search for it. Its implementation differs only in its handling of lookup failure: rather than returning an error when the target is not found, it returns false. If the target is successfully resolved, it returns true.

4.5 Error Handling

Primarily, errors in this system arise from invalid client requests or resource limitations. These include cases such as invalid permissions, as well as exhaustion of resources such as available blocks. To maintain correctness, the appropriate conditions are explicitly checked before the execution of each stage of the operation.

To support this, operations are decomposed into smaller functions, each responsible for a specific task. At each potential point of failure, inputs and system state are validated, with failures resulting in the return of a defined error code from a global set. These error codes are propagated through the call chain, allowing higher-level operations to respond appropriately. Where possible, alternative actions are attempted; otherwise, the operation is safely terminated, reverting any partial changes to maintain consistency. The final error state is then communicated back to the client through the response structure.

5 Evaluation

To increase confidence in both the correctness and performance of the FS implementation, evaluation was conducted through multiple stages of testing and performance analysis.

5.1 Validation

Extensive validation was conducted to evaluate the correctness, robustness and reliability of the FS under both normal and adverse conditions. Given the range of supported operations, numerous edge cases and error scenarios arise. Additionally, the presence of multiple clients and asynchronous communication introduces further complexity, requiring testing not only to verify functional correctness but also to ensure that the system maintains consistency and stability under interleaved workloads.

5.1.1 Unit Tests

Unit tests were developed for the core of the file system, including components such as block, inode and directory management, and file handle operations. These tests focused solely on verifying the correctness of the file server's data structures and their accesses in isolation.

Testing at this level enabled a modular development approach, allowing components to be validated incrementally during implementation. This also simplified debugging, as errors were easier to localise due to their limited scope.

To ensure separation of concerns, these components were tested by directly invoking their functions outside the Microkit environment. This allowed inputs and supporting data to be simulated through deterministic flows and the internal state of the FS to be inspected, enabling correctness to be validated at each stage of execution. Testing regular inputs alongside failure conditions, such as resource exhaustion, gave confidence that the fundamental building blocks of the FS operated correctly before integration and would not cause wider issues upon failure.

For example, one test constructs a mock 'indirect block' containing a list of allocated block indices, invokes the `release_indirect_block` routine and then verifies that each referenced block is marked free in the BAT.

5.1.2 Integration Tests

Once the components were verified, integration testing was used to validate the behaviour of the system as a whole, exercising all FS operations through its regular running microkit environment. Rather than directly inspecting internal state, validation was performed through the responses and error codes returned to clients, such as creating a file then listing the root directory. This ensured that testing reflected real system usage and confirmed that correct behaviour was exposed through the public interface.

Single Client

These tests exercised the majority of functionality from the client's perspective, covering the full lifecycle of files and directories without the added complexity of interleaved access. Within this scope, it was possible to verify that invalid client inputs, such as attempting to delete a non-existent file, were correctly rejected with appropriate error codes. Additionally, boundary conditions were tested to ensure correct behaviour under extreme cases, such as reading the maximum supported amount of data.

Multiple Clients

To ensure that all clients were serviced correctly, and that the system operated reliably under load, extended tests were conducted which interleaved operations from multiple clients. This enabled validation of scenarios that cannot be observed in a single-client context, including permission enforcement and modification of shared resources.

As clients execute independently, explicit synchronisation was required. This was achieved through the use of marker files, where files were created with predefined names and were monitored by other clients. These acted as barriers, allowing coordination of execution order and enabling clients to signal completion of operations to both the server and one another. For example, one test creates a publicly readable file as client 1, after which client 2 attempts to read that file to verify that access is permitted. The file is then modified by client 1 to be private and client 2 subsequently attempts to read it again, verifying that the operation is, correctly, rejected with an invalid permissions error.

5.2 Performance Evaluation

5.2.1 Goals

The primary goal of this evaluation was to compare the performance characteristics of the synchronous and asynchronous FS designs. In particular, the evaluation aimed to quantify the impact of IPC overhead and assess the effectiveness of batching in reducing operation cost. Additionally, the behaviour of both systems under multiclient workloads was examined to determine how well each design scales when experiencing contention.

5.2.2 Metrics

For the per-operation benchmarking, performance was evaluated using the average time per-operation, taken from the total execution time of a long sequence of the specified operation, to amortise any stochastic effects. For the more realistic workflows, time taken to complete the whole suite was used.

Time measurement was performed using the CPU cycle counter, as the low-level execution environment did not provide native timing facilities. The cycle count was recorded before and after each client's measurable operations. Results were averaged across multiple runs to mitigate run-to-run noise and improve reliability.

In multiclient scenarios, fairness was also considered. This was validated by recording the total time taken by each client to complete its workload.

5.2.3 Experimental Setup

All experiments were conducted within the same emulated environment using the default `virt` platform of Quick Emulator (QEMU) [25], ensuring consistency across all tests. The synchronous and asynchronous implementations were evaluated under identical conditions, with the same workloads, file sizes and FS state.

All operations were validated for correctness during execution to ensure that performance results reflected valid system behaviour rather than erroneous outcomes. During the varied workload, this processing also mimicked non-file I/O which would occur in a typical system, helping measured performance reflect realistic operating conditions.

5.2.4 Benchmark Design

Two benchmark suites were developed to evaluate system performance. The first was designed to isolate and quantify the reduction in communication overhead achieved by the asynchronous server, while the second evaluated overall system performance under more realistic and varied workloads.

This initial aim was achieved through a single-client benchmark which repeatedly executed a single type of operation allowing controlled measurements of individual operation costs for both systems. Both read and write operations were evaluated independently, as they are representative of common FS usage and exhibit differing behaviour. As timing was recorded from the client's perspective, this included both internal server processing time and communication overhead.

For the asynchronous implementation, the benchmark was executed with varying batch sizes. A batch size of one provided a baseline comparison, to ensure that the asynchronous design did not significantly degrade performance when batching was not possible. This is important since many real workloads contain inherent dependencies, while larger batch sizes allowed evaluation of how less IPC reduces per-operation cost.

The second benchmark was a multiclient, realistic workload designed to simulate typical FS usage. Multiple clients executed independently, each performing a sequence of varied operations across many files. This sequence represented a complete file lifecycle. Operations were interleaved across clients to introduce contention and better reflect real-world usage patterns.

As batching is central to the performance benefits of the asynchronous design, this benchmark was structured to allow batching where it would naturally occur, without artificially constraining the workload, as a workload with strict dependencies between operations would remove the asynchronous benefits and provide limited insight beyond the single-operation baseline benchmark.

Operations were grouped as such:

- **Batch 1:** Create.
- **Batch 2:** Write and Close.
- **Batch 3:** Open.
- **Batch 4:** Seek and Read and Delete.

Performance was measured across varying numbers of clients, enabling analysis of scalability and contention to provide a more balanced comparison between the designs.

5.2.5 Results and Analysis

Single-Client Per-Operation Benchmark

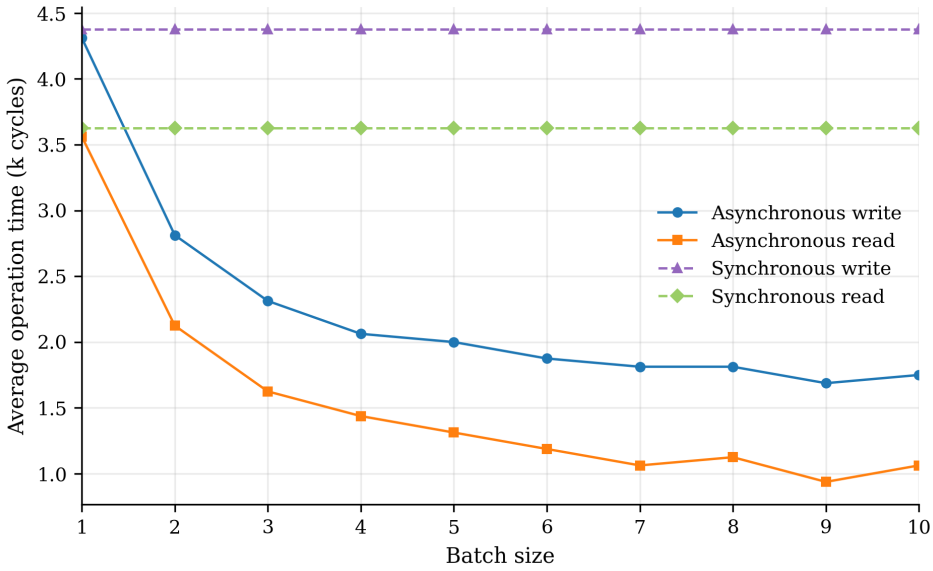

Figure 5.1: Average ticks per operation by batch size (Read and Write)

Figure 5.1 shows how the average time taken per operation was affected by batch size for both read and write operations, alongside the synchronous baseline for comparison. The synchronous system took approximately 4375 cycles for writes and 3625 for reads.

At a batch size of one, asynchronous performance was effectively identical to the synchronous case, with writes and reads taking around 4313 and 3562 cycles, respectively. This confirms that negligible overhead is introduced in the absence of batching, validating that it can be used without performance degradation in more dependent workflows.

As batch size increased, a substantial reduction in per-operation cost was observed, indicating that communication overhead forms a significant component of total operation latency. For write operations, latency decreased to less than 1800 cycles at batch sizes of seven and above, corresponding to an approximate 60% reduction. Read operations, with less internal processing cost, exhibited an even greater relative improvement, decreasing to around 1000 cycles, yielding reductions of 70%.

This aligns with expected results. At a batch size of 7, six IPC round trips are avoided. The total reduction of approximately 2500 cycles therefore corresponds to roughly 420 cycles saved per IPC round trip. This is consistent with the expected cost of IPC in seL4, at approximately 200 cycles per direction [16].

The majority of this improvement occurred at relatively small batch sizes, with both the write and read operations exhibiting extremely similar trends, showing that this behaviour is consistent. 90% of the total reduction seen was achieved by a batch size of four, beyond this point, performance improvements became incremental, plateauing completely beyond a batch size of seven, as the system approached its performance bound. This trend was further supported by Figure 5.2. The gradient magnitude of the per-operation time for both operations decreased rapidly as batch size increases, approaching zero at larger batch sizes.

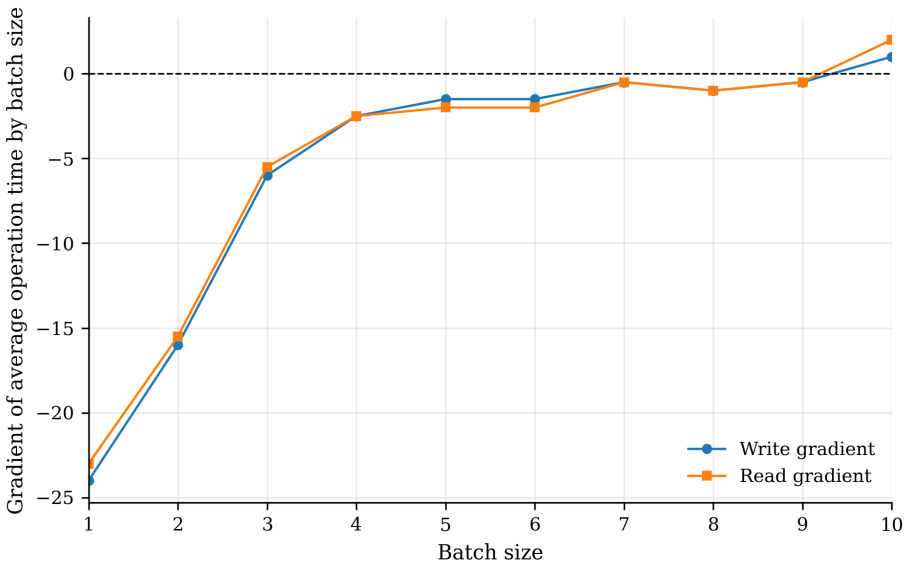

Figure 5.2: Gradient of average ticks per operation by batch size (Read and Write)

These results closely followed the analytical model discussed in subsection 3.2.2. The stabilising of performance at larger batch sizes indicated that the communication overhead had been effectively amortised, and the system was operating close to its limit. At a batch size of seven, this upper bound is relatively achievable, indicating that IPC overhead could be effectively mitigated in realistic system conditions.

Realistic Multiclient Workload

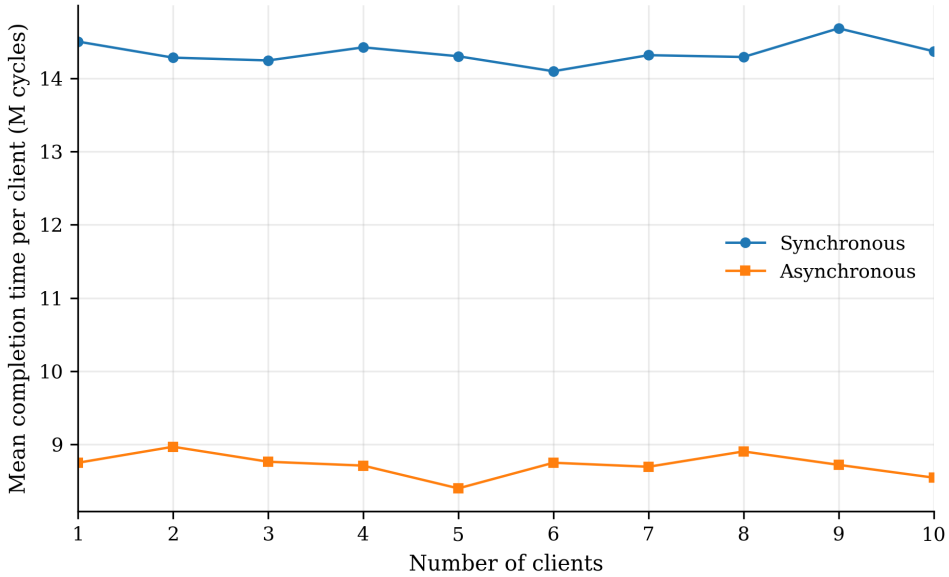

Figure 5.3: Total ticks per client by number of clients (Synchronous vs Asynchronous)

Figure 5.3 shows the mean execution time per client as a function of the number of concurrent clients for both the synchronous and asynchronous systems. Across all client counts, both systems exhibited relatively stable performance, with the asynchronous design consistently outperforming the synchronous baseline.

For a single client, the asynchronous system took approximately 8.75 million cycles to complete the suite, compared to around 14.5 million for the synchronous system, representing a reduction of approximately 40%. This improvement remained consistent as the number of clients increased. Expectedly, this reduction was lower than the single-operation benchmark, as there was less opportunity for batching due to dependencies between operations, and the presence of other, non-file I/O processing reduced the proportion of time spent on IPC. However, the still substantial improvements across all client counts confirm that the benefits of reduced communication overhead are maintained at high levels of contentention and in more complex and realistic workloads.

Although there was some variation across client counts, it was minimal and exhibited no clear trend, suggesting that the workload scales predictably and that the systems remain robust as load increases.

Fairness between clients is illustrated in Figure 5.4 through the range of individual client completion times. While this is a coarse measure, capturing only overall completion time rather than fairness during execution, it provides a basic check that no client was excessively delayed. Both systems exhibited very similar behaviour, with relatively low completion-time variation that increased modestly with client count. This is expected under increasing contention, and when averaged across the number of clients, this trend diminishes, as shown in Figure 5.5.

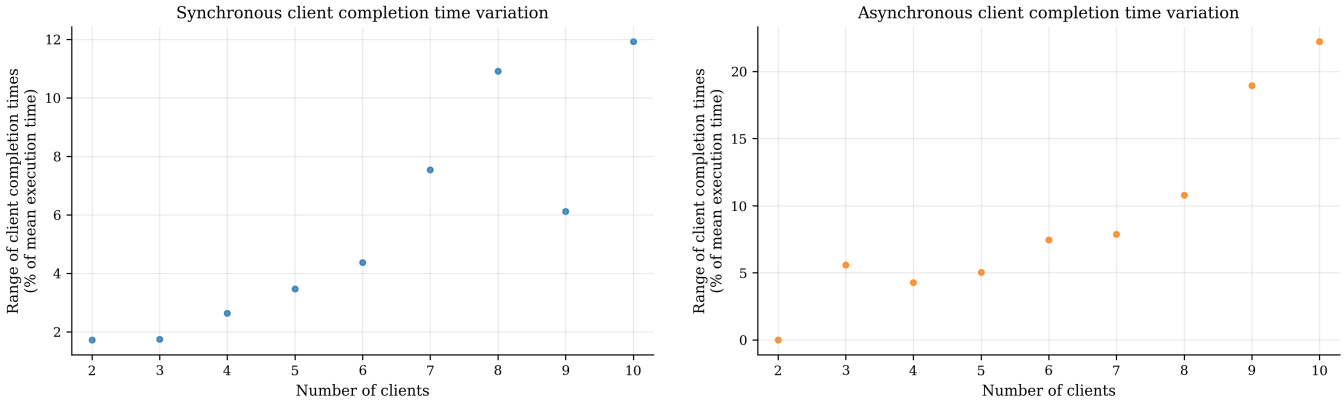

(a) Synchronous

(b) Asynchronous

Figure 5.4: Range of client completion times (ticks) by number of clients

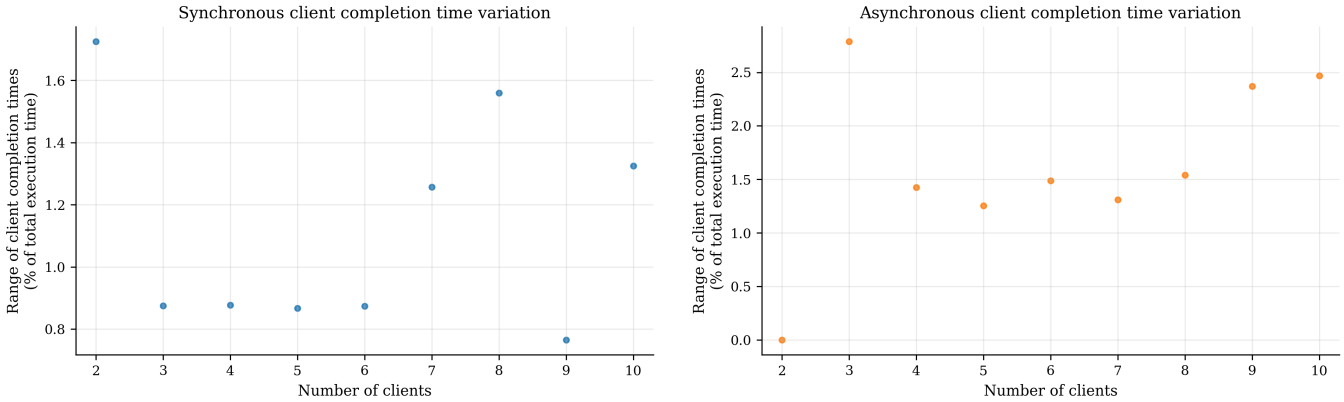

(a) Synchronous

(b) Asynchronous

Figure 5.5: Normalised range of client completion times (ticks) by number of clients

Although the synchronous system showed slightly lower ranges, the difference is minimal, implying that neither design exhibits a significant fairness issue or introduces disproportionate delays for individual clients.

Overall, these results show that the asynchronous design can substantially reduce IPC overhead and improve performance where batching opportunities exist, while maintaining fairness comparable to the synchronous system and introducing negligible overhead when batching is not exploited.

6 Conclusion

This dissertation investigated whether IPC overhead in seL4-based systems could be mitigated through architectural and interface-level design choices, specifically through an asynchronous file server. This required the design and implementation of a complete user-space system, including both the file server and the supporting communication mechanisms needed to realise and evaluate the interface model. The work demonstrates that meaningful performance improvements can be achieved through communication-aware system structure, while also showing that IPC overhead is strongly influenced by higher-level architectural decisions beyond kernel mechanisms alone.

6.1 Contributions

This work contributes a complete and practical user-space file server for the seL4 Microkit framework, supporting multiclient access, a simple FS API and both synchronous and asynchronous communication interfaces. It demonstrates that complex, stateful services can be realised in user space within seL4 while maintaining structured interaction, correctness and practical usability.

In addition, this work contributes empirical insight into mitigation of IPC overhead through asynchronous communication. Evaluation showed that batching can substantially improve throughput and reduce average operation latency by as much as 70%, while also demonstrating that these benefits are strongly workload-dependent.

6.2 Drawbacks and Limitations

Despite achieving its objectives well, the system has several limitations that constrain both its performance and general applicability.

6.2.1 FS Limitations

The implemented FS is functionally rich and reasonably well validated, but could be improved in multiple areas. Additional operations such as file renaming and copying could be introduced to improve usability. Furthermore, lookup performance is suboptimal due to linear search mechanisms; the absence of more efficient indexing structures (e.g. hash tables or trees) contributes to increased latency as the file set grows, yet the current implementation is sufficient for general use and for the experiments undertaken in this report.

6.2.2 Benchmarking Constraints

Evaluation required the development of custom benchmarks due to the specialised environment, low-level platform and non-standard interface. While these benchmarks effectively demonstrate relative performance trends, they limit direct comparability with existing systems. Consequently, results should be interpreted as indicative rather than absolute.

6.2.3 Lack of Persistent Storage

The system operates entirely in memory, with no backing disk. Incorporating persistent storage would introduce substantial additional complexity, particularly around buffering, write-back policies and cache management, beyond the scope of this work. Its absence also results in highly deterministic and relatively low operation latencies. In realistic storage-backed systems, higher and more variable I/O latency would reduce the relative impact of IPC overhead, meaning these results likely represent an upper bound on the benefits of communication overhead reduction in practice. However, if implemented on multi-core hardware, the asynchronicity provided by this system could offset this reduced benefit through increased concurrency and non-blocking execution.

6.2.4 Single-Threaded Execution

The server and clients operate on a single thread, limiting concurrency and reducing the potential benefits of the asynchronous design. This reflects the execution environment used during development and evaluation, where multicore support was not available within Microkit. As a result, observed performance gains arise primarily from reduced communication overhead through batching rather than true parallel execution.

This likely makes the measured gains a conservative estimate of the improvements achievable in a fully concurrent multicore system, where additional benefits from overlapping request generation, processing and response handling could be realised, with increased processor counts enabling greater potential for parallel work. The architecture is designed to be transferable to such an environment with only minor modification.

6.2.5 Additional Client Burden

The asynchronous design introduces additional client-side complexity through management of request queues, response buffers and batching decisions, increasing both per-client memory usage and implementation burden relative to the synchronous model.

Furthermore, as Microkit requires shared memory regions to be statically defined, dynamic mapping of arbitrary memory objects is not possible. Consequently, all shared data must be passed via the predefined buffers, which may require additional copying, increasing operation latency.

Although a supporting library abstracts much of this functionality, clients must still determine how to group operations into batches and when to synchronise, creating a workload-dependent trade-off between throughput and responsiveness. Thus, while the asynchronous model improves performance, it shifts part of the system complexity from the server to clients and may make correct usage more demanding.

6.3 Future Work

Recent updates to Microkit have introduced multicore support, and future work would therefore aim to extend the system for a multicore environment to fully realise concurrency benefits. Alternatively, future work could attempt implementation of the FS directly on seL4, rather than through the Microkit framework, allowing more flexible, and possibly more efficient, memory management at the cost of development complexity.

Additionally, enhancing the FS to support a broader set of operations and more efficient data structures, namely tree-based indexing, would improve scalability, and introducing a caching layer and persistent storage would enable more realistic deployment scenarios. Finally, further exploration of IPC mechanisms, such as hybrid synchronous—asynchronous models, could also yield additional performance improvements.

Bibliography

[1] Greg Barnes. “A method for implementing lock-free shared-data structures”. en. In: *Proceedings of the fifth annual ACM symposium on Parallel algorithms and architectures - SPAA ’93*. Velen, Germany: ACM Press, 1993, pp. 261–270. ISBN: 978-0-89791-599-1. DOI: 10.1145/165231.165265.

[2] Andrew Baumann et al. “The multikernel: a new OS architecture for scalable multicore systems”. In: *Proceedings of the ACM SIGOPS 22nd symposium on Operating systems principles*. SOSP ’09. New York, NY, USA: Association for Computing Machinery, Oct. 2009, pp. 29–44. ISBN: 978-1-60558-752-3. DOI: 10.1145/1629575.1629579.

[3] Simon Biggs, Damon Lee, and Gernot Heiser. “The Jury Is In: Monolithic OS Design Is Flawed: Microkernel-based Designs Improve Security”. In: *Proceedings of the 9th Asia-Pacific Workshop on Systems*. APSys ’18. New York, NY, USA: Association for Computing Machinery, Aug. 2018, pp. 1–7. ISBN: 978-1-4503-6006-7. DOI: 10.1145/3265723.3265733.

[4] Nathan Dautenhahn et al. “Nested Kernel: An Operating System Architecture for Intra-Kernel Privilege Separation”. In: *Proceedings of the Twentieth International Conference on Architectural Support for Programming Languages and Operating Systems*. ASPLOS ’15. New York, NY, USA: Association for Computing Machinery, Mar. 2015, pp. 191–206. ISBN: 978-1-4503-2835-7. DOI: 10.1145/2694344.2694386.

[5] Diego Didona et al. “Understanding modern storage APIs: a systematic study of libaio, SPDK, and io_uring”. In: *Proceedings of the 15th ACM International Conference on Systems and Storage*. SYSTOR ’22. New York, NY, USA: Association for Computing Machinery, June 2022, pp. 120–127. ISBN: 978-1-4503-9380-5. DOI: 10.1145/3534056.3534945.

[6] The seL4 Foundation. *2.0.1 — seL4 docs*. ”Accessed”: 2026-04-22. URL: https://docs.sel4.systems/releases/microkit/2.0.1.html.

[7] The seL4 Foundation. *Microkit User Manual (2.2.0) — seL4 docs*. Accessed: 2026-04-18. URL: https://docs.sel4.systems/projects/microkit/manual/latest/.

[8] Git. *Git*. ”Accessed”: 2026-04-22. URL: https://git-scm.com/.

[9] Arnav Gupta, Druva Dhakshinamoorthy, and Arnab K. Paul. “Studying the Effects of Asynchronous I/O on HPC I/O Patterns”. In: *2024 IEEE International Conference on Cluster Computing Workshops (CLUSTER Workshops)*. Sept. 2024, pp. 109–112. DOI: 10.1109/CLUSTERWorkshops61563.2024.00025.

[10] Norm Hardy. “The Confused Deputy: (or why capabilities might have been invented)”. In: *SIGOPS Oper. Syst. Rev.* 22.4 (Oct. 1988), pp. 36–38. ISSN: 0163-5980. DOI: 10.1145/54289.871709.

[11] Wanning He et al. “RingGuard: Guard io_uring with eBPF”. In: *Proceedings of the 1st Workshop on eBPF and Kernel Extensions*. eBPF ’23. New York, NY, USA: Association for Computing Machinery, Sept. 2023, pp. 56–62. ISBN: 979-8-4007-0293-8. DOI: 10.1145/3609021.3609304.

[12] Gernot Heiser and Kevin Elphinstone. “L4 Microkernels: The Lessons from 20 Years of Research and Deployment”. In: *ACM Trans. Comput. Syst.* 34.1 (Apr. 2016), 1:1–1:29. ISSN: 0734-2071. DOI: 10.1145/2893177.

[13] Maurice Herlihy et al. *The art of multiprocessor programming*. Newnes, 2020. DOI: 10.1145/1146381.1146382.

[14] Owen S. Hofmann et al. “Ensuring operating system kernel integrity with OSck”. In: *SIGARCH Comput. Archit. News* 39.1 (Mar. 2011), pp. 279–290. ISSN: 0163-5964. DOI: 10.1145/1961295.1950398.

[15] Michael Kerrisk. *The Linux programming interface: a Linux and UNIX system programming handbook*. No Starch Press, 2010. ISBN: 978-1-59327-220-3.

[16] Gerwin Klein et al. “seL4: formal verification of an OS kernel”. In: *Proceedings of the ACM SIGOPS 22nd symposium on Operating systems principles*. SOSP ’09. New York, NY, USA: Association for Computing Machinery, Oct. 2009, pp. 207–220. ISBN: 978-1-60558-752-3. DOI: 10.1145/1629575.1629596.

[17] Martin Kleppmann. *Designing data-intensive applications: The big ideas behind reliable, scalable, and maintainable systems*. ” O’Reilly Media, Inc.”, 2017. ISBN: 9781491903063.

[18] Yauhen Klimiankou. “Micro-CLK: returning to the asynchronicity with communication-less microkernel”. In: *Proceedings of the 12th ACM SIGOPS Asia-Pacific Workshop on Systems*. APSys ’21. New York, NY, USA: Association for Computing Machinery, Aug. 2021, pp. 106–114. ISBN: 978-1-4503-8698-2. DOI: 10.1145/3476886.3477521.

[19] Kyung-Suk Lhee and Steve J Chapin. “Detection of file-based race conditions”. In: *International Journal of Information Security* 4.1 (2005), pp. 105–119. DOI: 10.1007/s10207-004-0068-2.

[20] Jochen Liedtke. “Improving IPC by kernel design”. In: *Proceedings of the fourteenth ACM symposium on Operating systems principles*. SOSP ’93. New York, NY, USA: Association for Computing Machinery, Dec. 1993, pp. 175–188. ISBN: 978-0-89791-632-5. DOI: 10.1145/168619.168633.

[21] Jing Liu et al. “Scale and performance in a filesystem semi-microkernel”. In: *Proceedings of the ACM SIGOPS 28th Symposium on Operating Systems Principles*. 2021, pp. 819–835. DOI: 10.1145/3477132.3483581.

[22] Jeffrey C. Mogul and Anita Borg. “The effect of context switches on cache performance”. en. In: *ACM SIGPLAN Notices* 26.4 (Apr. 1991), pp. 75–84. ISSN: 0362-1340, 1558-1160. DOI: 10.1145/106973.106982.

[23] Yuki Nakata. *ACL vs Capability*. Accessed: 2026-04-18. URL: https://www.chikuwa.it/blog/2023/capability/.

[24] Evgeny Novikov and Ilja Zakharov. “Verification of operating system monolithic kernels without extensions”. In: *International Symposium on Leveraging Applications of Formal Methods*. Springer. 2018, pp. 230–248. DOI: 10.1007/978-3-030-03427-6_19.

[25] QEMU. *‘virt’ Generic Virtual Platform (virt) — QEMU documentation*. ”Accessed”: 2026-04-22. URL: https://www.qemu.org/docs/master/system/riscv/virt.html.

[26] MK Quweider. “A Deep Dive Into FAT-32 Windows File System: A Digital Forensics Perspective”. In: *2025 5th International Conference on Electrical, Computer and Energy Technologies (ICECET)*. July 2025, pp. 1–11. DOI: 10.1109/ICECET63943.2025.11472363.

[27] Benjamin Roch. “Monolithic kernel vs. Microkernel”. In: *TU Wien* 1 (2004), p. 1.

[28] Domenico Rotondi and Salvatore Piccione. “Managing access control for things: a capability based approach.” In: *BodyNets*. 2012, pp. 263–268. DOI: 10.4108/icst.bodynets.2012.250234.

[29] Fred B. Schneider. “Least Privilege and More”. en. In: *Computer Systems: Theory, Technology, and Applications*. Ed. by Andrew Herbert and Karen Spärck Jones. New York, NY: Springer, 2004, pp. 253–258. ISBN: 978-0-387-21821-2. DOI: 10.1007/0-387-21821-1_38.

[30] S. Setapa et al. *Trusted computing based microkernel*. Dec. 2010. DOI: 10.1109/ICCAIE.2010.5771164.

[31] Abraham Silberschatz, Peter B. Galvin, and Greg Gagne. *Operating System Concepts Essentials*. 2nd. Wiley Publishing, Oct. 2013. ISBN: 978-1-118-80492-6.

[32] Amit Singh. *Mac OS X Internals: A Systems Approach*. en. Google-Books-ID: K8vUkpOXhN4C. Addison-Wesley Professional, June 2006. ISBN: 978-0-13-270226-3.

[33] William Stallings. *Operating Systems: Internals and Design Principles*. 7th. USA: Prentice Hall Press, Feb. 2011. ISBN: 978-0-13-230998-1.

[34] Andrew S Tanenbaum and Herbert Bos. *Modern operating systems*. Pearson Education, Inc., 2015.

[35] Houjun Tang et al. “Transparent Asynchronous Parallel I/O Using Background Threads”. In: *IEEE Transactions on Parallel and Distributed Systems* 33.4 (Apr. 2022), pp. 891–902. ISSN: 1558-2183. DOI: 10.1109/TPDS.2021.3090322.

[36] Trudy Weibel et al. “the seL4 Microkit”. In: (2024). URL: https://www.trustworthy.systems/publications/papers/Weibel_KPSSH_24.pdf.

[37] J.T. Yantchev et al. “Low-latency asynchronous FIFO buffers”. In: *Proceedings Second Working Conference on Asynchronous Design Methodologies*. 1995, pp. 24–31. DOI: 10.1109/WCADM.1995.514639.