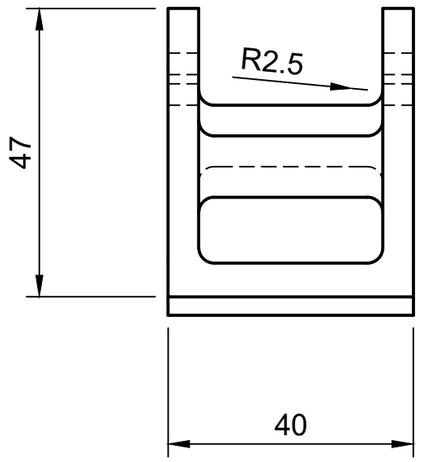

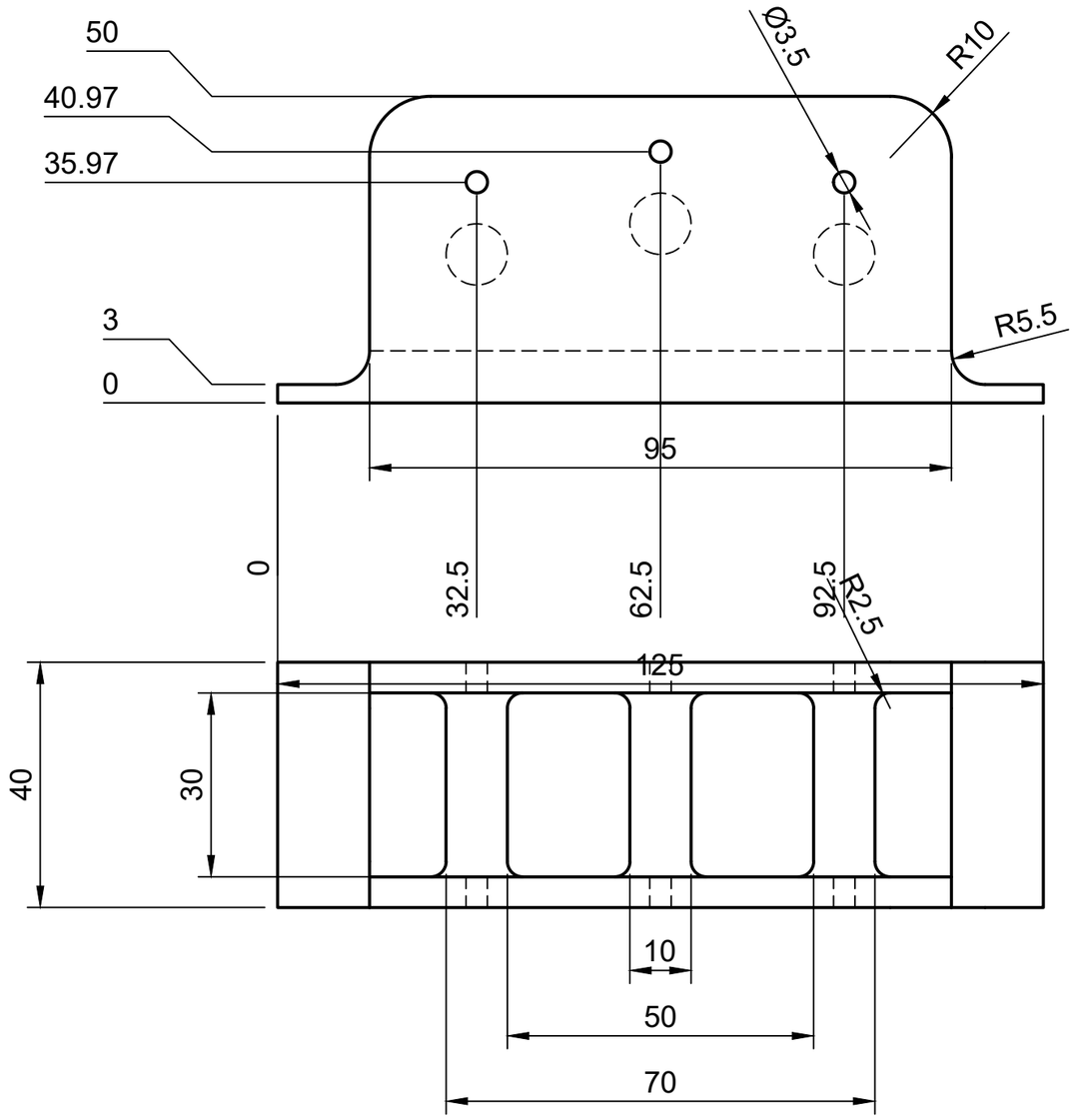

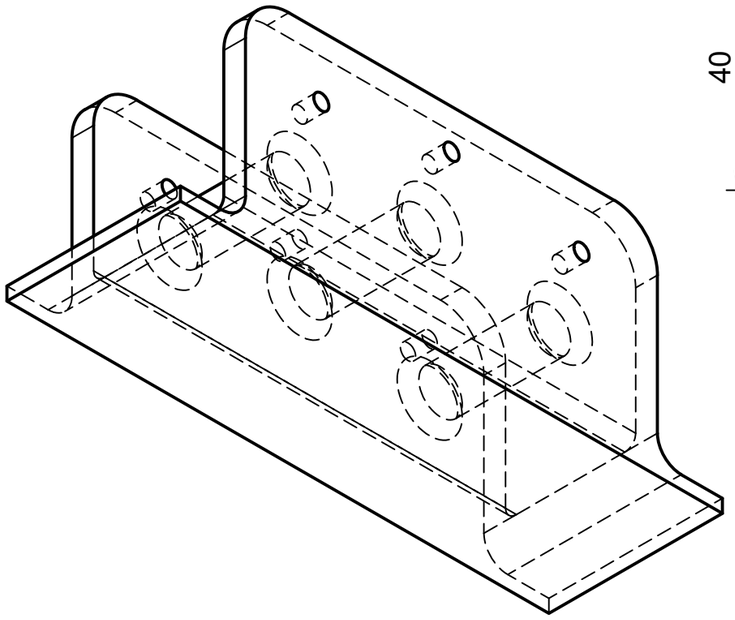

Dept.	Technical reference	Created by	Approved by
Robotics	Middle Seperator	Luke Steppens 12/05/2025	Luke Steppens
		Document type: Technical Drawing	Document status: Final
		Title: Middle Seperator	DWG No.: MIDS1
			Rev.: A · Date of issue: 12/05/2025 · Sheet: 1/1