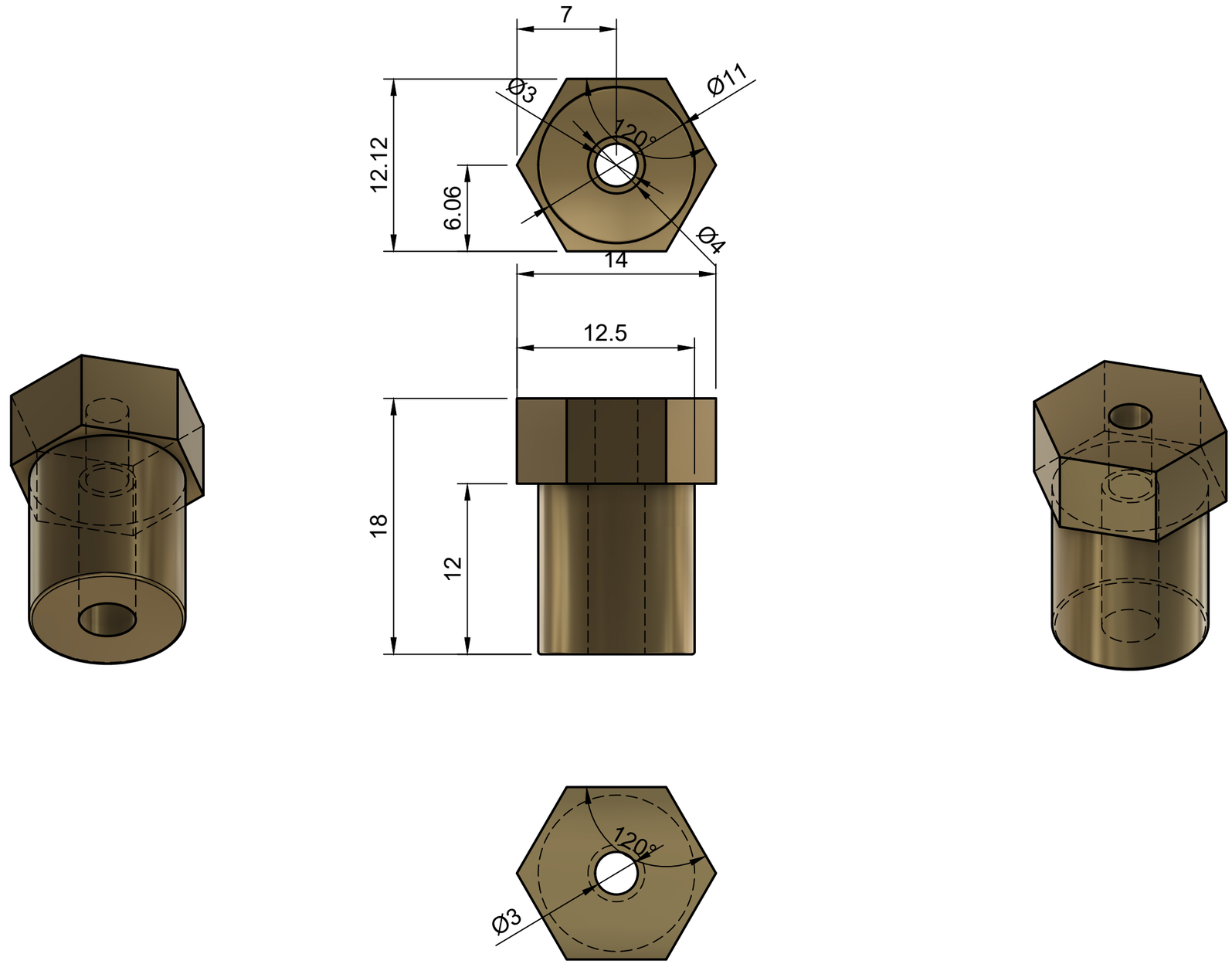


| Dept. | Technical reference | Created by | Approved by |
|---|---|---|---|
| Robotics | Bronze Flange | Luke Steppens 11/05/2025 | Luke Steppens |
| | | Document type: Part Drawing | Document status: Final |
| | | Title: Bronze flange | DWG No.: BF1 |
| | | | Rev.: A · Date of issue: 11/05/2025 · Sheet: 1/1 |