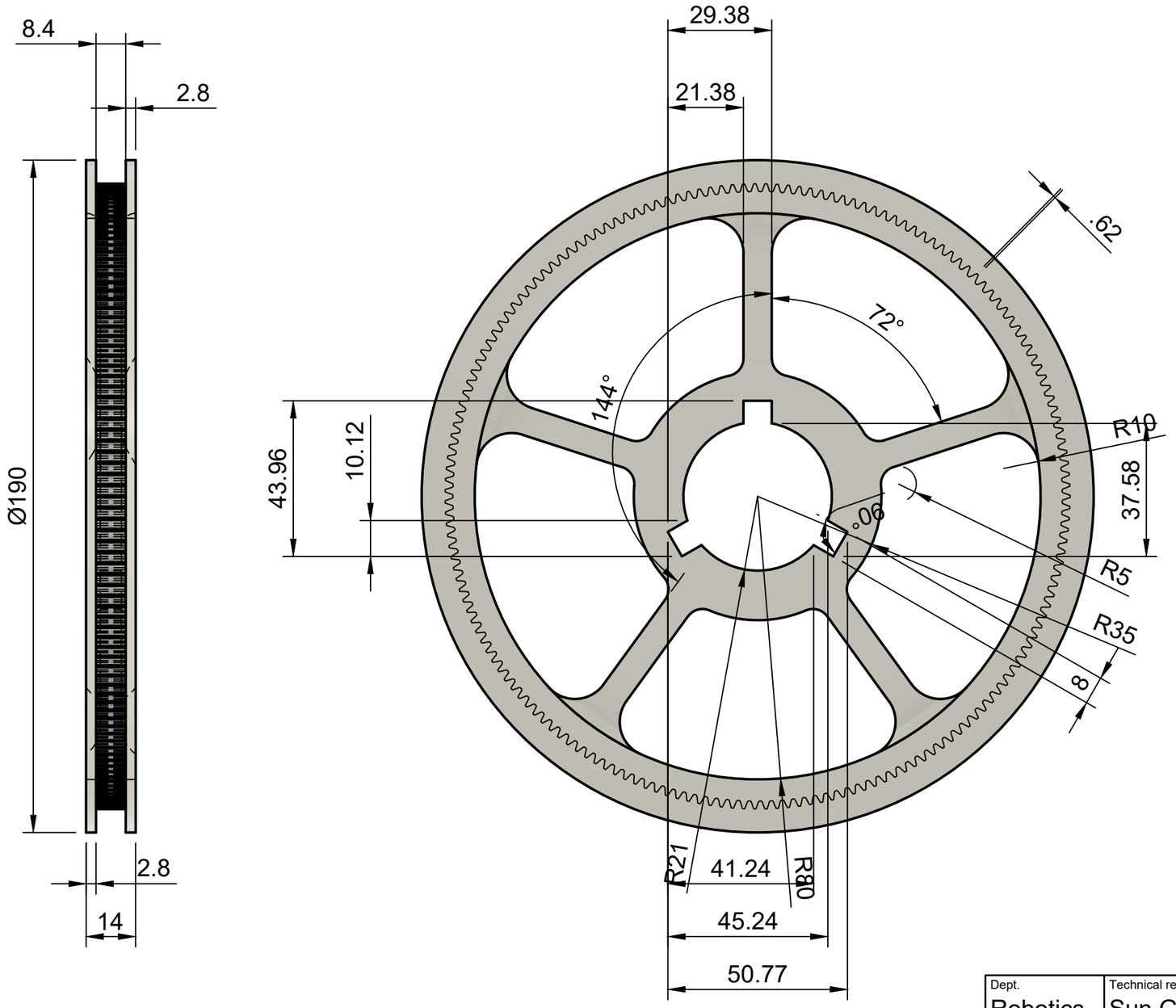


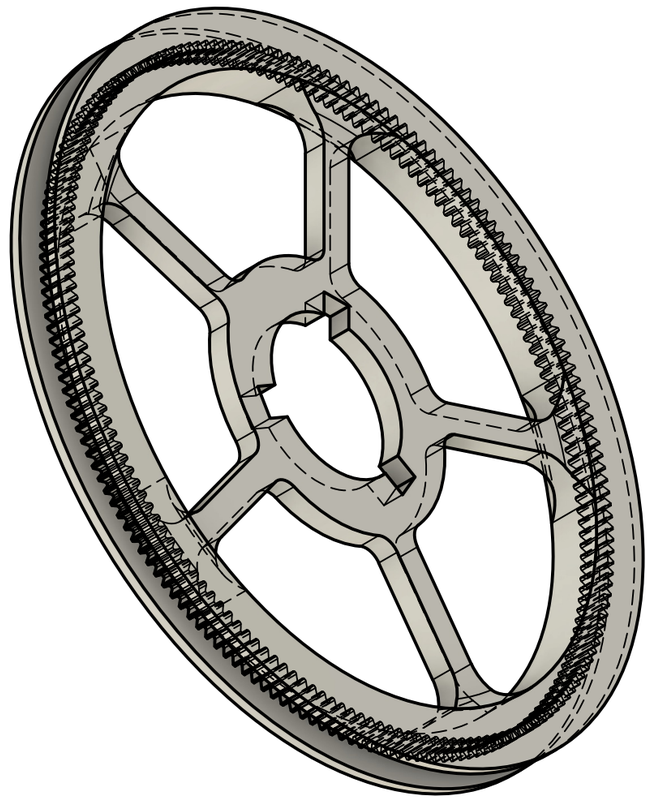

| Dept. | Technical reference | Created by | Approved by |
|---|---|---|---|
| Robotics | Sun Gear | Luke Steppens 11/05/2025 | Luke Steppens |
| | | Document type: Technical Drawing | Document status: Final |
| | | Title: Sun Gear Dual Rim (Final) | DWG No.: SGDR1 |
| | | | Rev.: A · Date of issue: 11/05/2025 · Sheet: 1/1 |