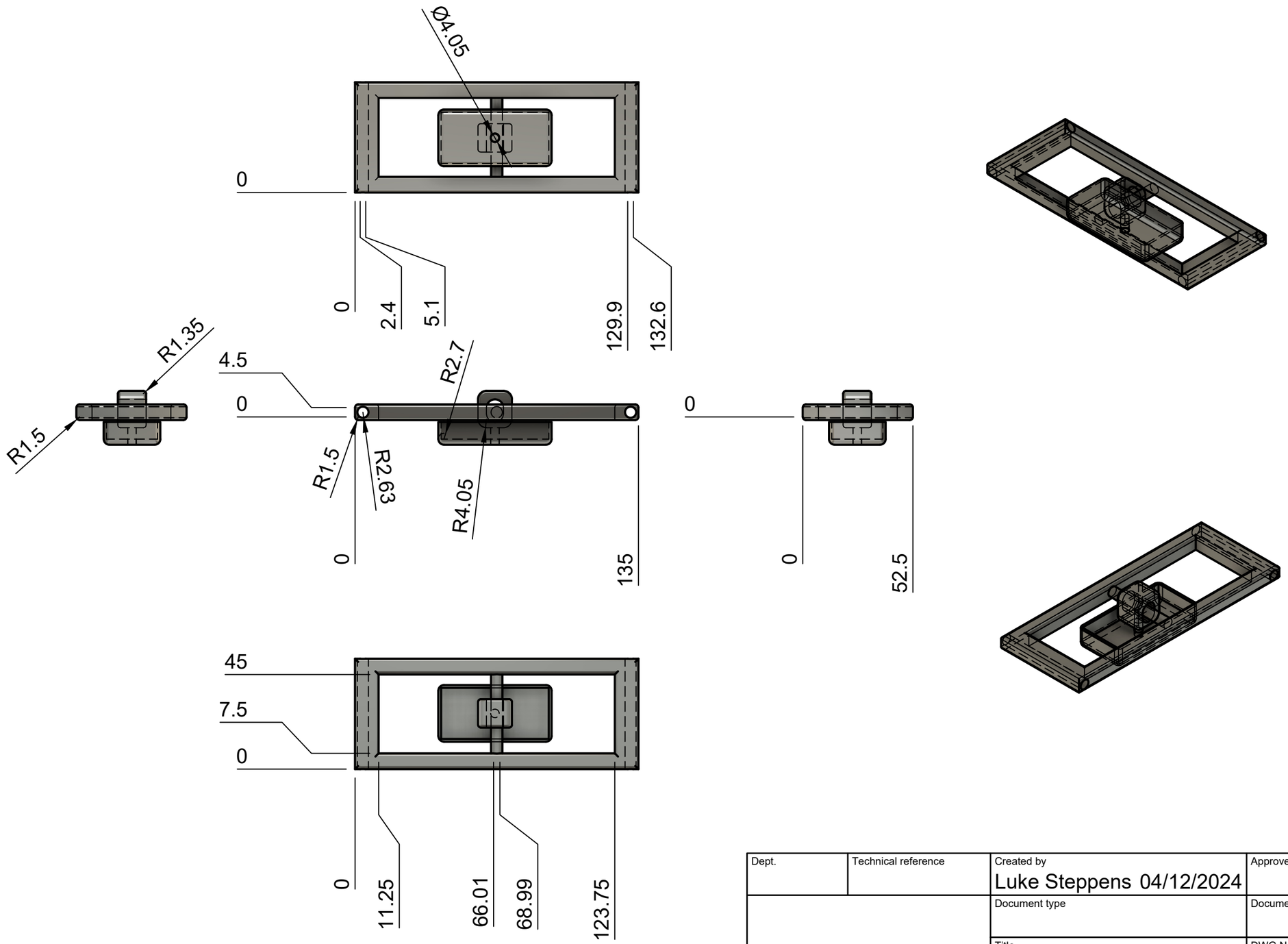

Dept.	Technical reference	Created by	Approved by
		Luke Steppens 04/12/2024	
		Document type	Document status
		Title: Basket + Frame Version 1	DWG No.
			Rev. / Date of issue / Sheet 1/1