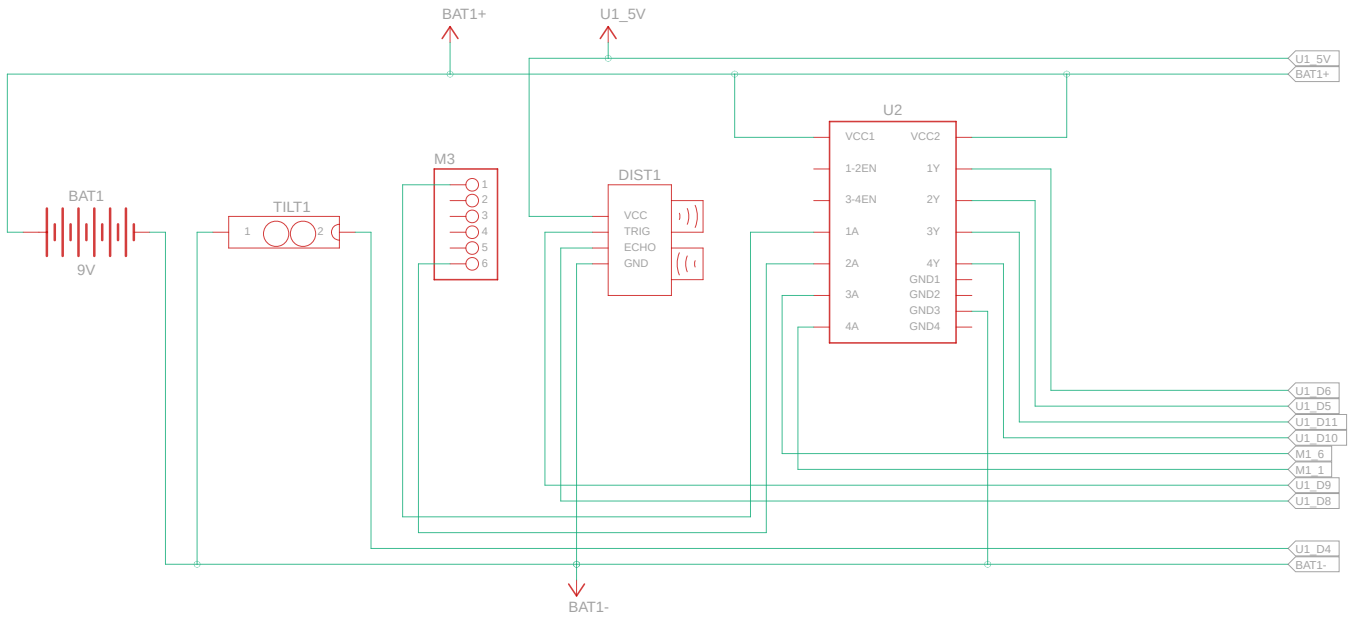

Made with Tinkercad®

Title: Sizzling Albar-Curcan

Date: 17/12/2024, 20:57:04

Sheet: 1/2

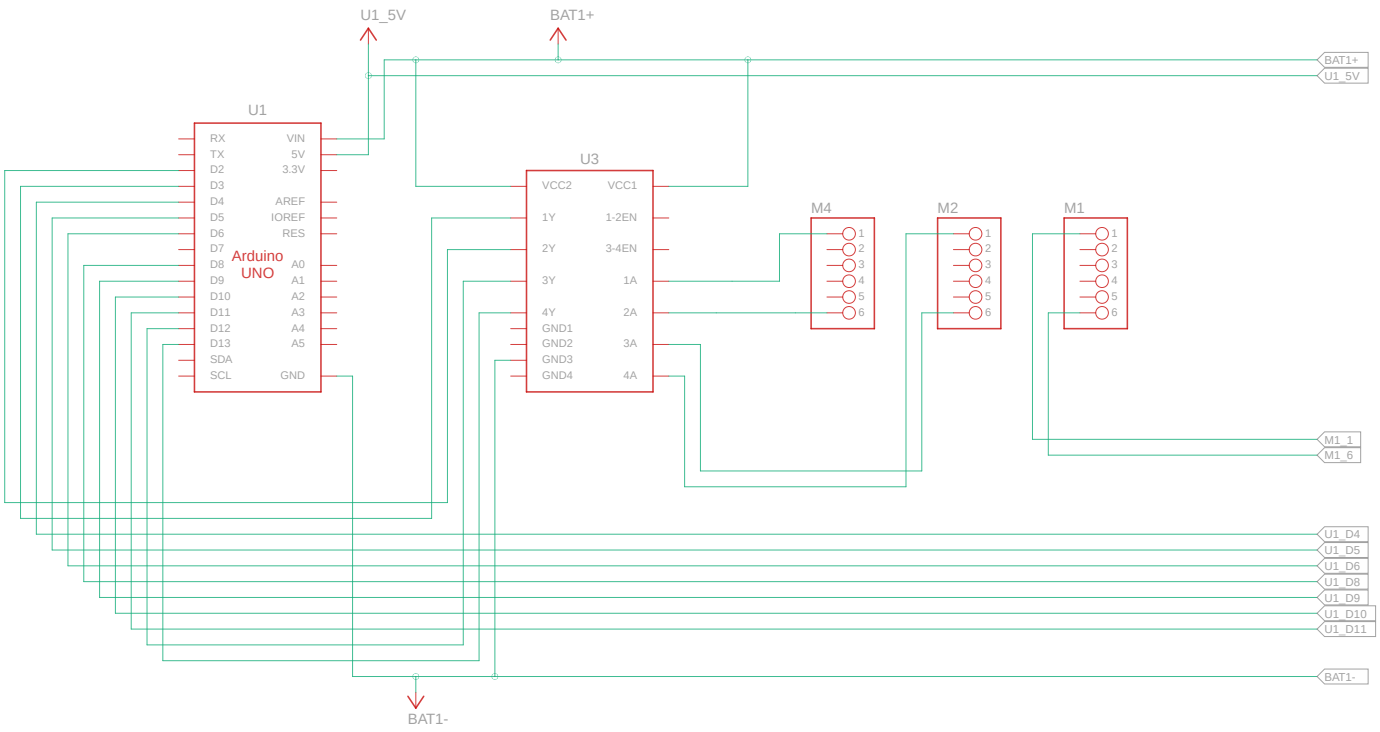

Made with Tinkercad®

Title: Sizzling Albar-Curcan	
Date: 17/12/2024, 20:57:04	Sheet: 2/2