一、实验目的

本实验要求你使用课程所学知识拆除“binary bombs（二进制炸弹，下文将简称为炸弹）”，增强对程序的机器级表示、汇编语言、调试器和逆向工程等方面原理与技能的掌握。 这里的炸弹是一个Linux可执行程序，包含了6个阶段（或层次、关卡）。炸弹运行的每个阶段要求你输入一个特定字符串，你的输入符合程序预期的输入，该阶段的炸弹就被拆除引信即解除了，否则炸弹“爆炸”打印输出 "BOOM!!!"。实验的目标是拆除尽可能多的炸弹关卡。

- 阶段1：字符串比较
- 阶段2：循环
- 阶段3：条件/分支
- 阶段4：递归调用和栈
- 阶段5：指针
- 阶段6：链表/指针/结构

另外还有一个隐藏阶段，只有当你在第4阶段的解后附加一特定字符串后才会出现。

为完成二进制炸弹拆除任务，你需要使用gdb调试器和objdump来反汇编炸弹的可执行文件并跟踪调试每一阶段的机器代码，从中理解每一汇
编语言代码的行为或作用，进而设法推断拆除炸弹所需的目标字符串。比如在每一阶段的开始代码前和引爆炸弹的函数前设置断点。

本实验的任务就是拆除炸弹。一定要在指定的虚拟机上完成作业，在其他的环境上运行有可能导致失败。（那姑且先试试咱的 Fedora Linux 36，至少，在 Fedora 36 和 Windows 10 下的反汇编代码是一致的。）

要学会单步跟踪调试汇编代码以及学会设置断点。你还要学会如何检查寄存器和内存状态。很好的使用调试器是你在未来的职业生涯中赚到更多money的一项重要技能！

二、报告要求

本报告要求学生把实验中实现的所有函数逐一进行分析说明，写出实现的依据，也就是推理过程，可以是一个简单的数学证明，也可以是代码分析，根据实现中你的想法不同而异。

三、分析

反汇编

```
objdump -d bomb > bomb_disas.txt
```

phase_1

死磕代码

传递的参数是

```
char *input;
```

首先看在main中调用其的部分：

```
  400d6a:   bf 48 23 40 00          mov    $0x402348,%edi
  400d6f:   e8 6c fd ff ff          call   400ae0 <puts@plt>
  400d74:   e8 2f 07 00 00          call   4014a8 <read_line>
  400d79:   48 89 c7                mov    %rax,%rdi # %rdi 存
*input（存的就是所指的地址）
  400d7c:   e8 ec 00 00 00          call   400e6d <phase_1>
  400d81:   e8 50 08 00 00          call   4015d6 <phase_defused>
```

phase_1函数本体：

```
0000000000400e6d <phase_1>:
  400e6d:   48 83 ec 08             sub    $0x8,%rsp
  400e71:   be d0 23 40 00          mov    $0x4023d0,%esi # 后来一直
用 %rsi，%rsi 相当于64位扩容吧。
  400e76:   e8 cf 04 00 00          call   40134a
<strings_not_equal>

  400e7b:   85 c0                   test   %eax,%eax # AND为0，ZF置
1，否则置0。
  400e7d:   75 05                   jne    400e84 <phase_1+0x17> #
ZF=0，跳转，爆。
  400e7f:   48 83 c4 08             add    $0x8,%rsp # %eax 为0，
ZF=1，OK。
  400e83:   c3                      ret

  400e84:   e8 be 05 00 00          call   401447 <explode_bomb>
  400e89:   eb f4                   jmp    400e7f <phase_1+0x12>
```

1 Byte = 8 bit

1 位 Hex = 4 bit

1 Word = 32/64 bit

当%eax非 0 时会跳转到call　401447 <explode_bomb>，炸了；

需要绕过去，也就是想法让%eax为 0，这样之后直接ret。

也就该让 <strings_not_equal>返回 0，也就得让40136e:　89 d0
mov　%edx,%eax中的%edx为 0。

其调用的strings_not_equal：

```
000000000040134a <strings_not_equal>:
  40134a:   41 54                   push   %r12
  40134c:   55                      push   %rbp
  40134d:   53                      push   %rbx

  # 第一次<string_length>
```

```
  40134e:    48 89 fb                 mov    %rdi,%rbx # 来自 <main>
中的 %rdi，也就是读入的字符串的地址
  401351:    48 89 f5                 mov    %rsi,%rbp # 来自
<phase_1> 中的 %esi，也就是目标字符串的地址
  401354:    e8 d4 ff ff ff           call   40132d <string_length>
  # 第二次<string_length>
  401359:    41 89 c4                 mov    %eax,%r12d # 暂存第一遍
<string_length> 的返回值
  40135c:    48 89 ef                 mov    %rbp,%rdi # 拿 %rsi 来
替，再调一遍。
  40135f:    e8 c9 ff ff ff           call   40132d <string_length>

  401364:    ba 01 00 00 00           mov    $0x1,%edx # %edx 设为 1。
  401369:    41 39 c4                 cmp    %eax,%r12d # 两次调用返回
值相等，则ZF置1，进循环。
  40136c:    74 07                    je     401375
<strings_not_equal+0x2b>

  40136e:    89 d0                    mov    %edx,%eax # 返回值不相等，
那就是返回1了，爆；或者是下面的循环终止。
  401370:    5b                       pop    %rbx
  401371:    5d                       pop    %rbp
  401372:    41 5c                    pop    %r12
  401374:    c3                       ret

####
#### 这段像个循环。
  401375:    0f b6 03                 movzbl (%rbx),%eax # (%rbx) ->
%eax
  401378:    84 c0                    test   %al,%al # %al 是 %eax 的
低 8 位，正好存储一个字符。
  40137a:    74 27                    je     4013a3
<strings_not_equal+0x59> # %al为0，确定读入的当前位置为NULL，OK。

  40137c:    3a 45 00                 cmp    0x0(%rbp),%al # %a1 -
(%rbp)，比较
  40137f:    75 29                    jne    4013aa
<strings_not_equal+0x60> # 不等，完蛋
  401381:    48 83 c3 01              add    $0x1,%rbx # 来自 <main>
中的 %rdi + 1，指针后移
```

```
  401385:   48 83 c5 01             add    $0x1,%rbp # 来自
<phase_1> 中的 %esi +1，指针后移
  401389:   0f b6 03                movzbl (%rbx),%eax # 返回 %rbx

  40138c:   84 c0                   test   %al,%al # %a1 为0，ZF置
1。
  40138e:   74 0c                   je     40139c
<strings_not_equal+0x52> # 跳转，返回 0，OK。

  401390:   38 45 00                cmp    %al,0x0(%rbp)
  401393:   74 ec                   je     401381
<strings_not_equal+0x37> # 相等，雷同。
  401395:   ba 01 00 00 00          mov    $0x1,%edx # %a1!=%rbp，
完蛋。
  40139a:   eb d2                   jmp    40136e
<strings_not_equal+0x24> # 强制截胡。
####
####

  40139c:   ba 00 00 00 00          mov    $0x0,%edx # 返回 0，OK。
  4013a1:   eb cb                   jmp    40136e
<strings_not_equal+0x24>

  4013a3:   ba 00 00 00 00          mov    $0x0,%edx # OK。
  4013a8:   eb c4                   jmp    40136e
<strings_not_equal+0x24>

  4013aa:   ba 01 00 00 00          mov    $0x1,%edx # 完蛋。
  4013af:   eb bd                   jmp    40136e
<strings_not_equal+0x24>
```

又调用的string_length：

```
000000000040132d <string_length>:
  40132d:   80 3f 00                cmpb   $0x0,(%rdi) # (%rdi) ==
0，也就是input[0] == NULL，ZF置1，反之置0。
  401330:   74 12                   je     401344
<string_length+0x17> # ZF=1，跳转，将 %eax 置0。
  401332:   48 89 fa                mov    %rdi,%rdx # %rdi ->
%rdx
```

```
  #### 类似于一个指针固定指向头，一个指向尾，移动尾直到碰到 NULL。
  401335:   48 83 c2 01             add    $0x1,%rdx # %rdx ++
（input[++i]）
  401339:   89 d0                   mov    %edx,%eax # %eax <-
%edx（%rdx 截半）
  40133b:   29 f8                   sub    %edi,%eax # %eax -=
%edi（%rdi 截半）

  40133d:   80 3a 00                cmpb   $0x0,(%rdx) # input[i]
?= 0
  401340:   75 f3                   jne    401335
<string_length+0x8> # (%rdx) != 0，再进行前面的循环
  401342:   f3 c3                   repz ret # %rdx == 0，返回

  401344:   b8 00 00 00 00          mov    $0x0,%eax
  401349:   c3                      ret
```

据此，我们首先判断其是否为空，`%rdi` 为 0（相当于数组首位）的话就是为`NULL`了吧。

从这里也可以理解为什么前面的循环都是 ++ 即可了，`char`毕竟是只占了1 Byte的，我们在遍历数组中的 input[0], input[1] ... 时，彼此之间的地址只差了 1。

好吧，其实没必要全部把代码搞懂的.....实际上前面理解大概也不怎么到位，之后再修改吧。

Objdump妙用

前面琢磨了很久，也没有想明白`%rsi`里到底存了什么。后来发现似乎倘若只反汇编“executable sections”，是找不到`$0x4023d0`这个地址的。

取巧一点：

```
  -d, --disassemble        Display assembler contents of
executable sections
  -D, --disassemble-all    Display assembler contents of all
sections


objdump -D bomb > bomb_disas_all.txt
```

考虑到string应以NULL为界，则直接开读直到00。

```
  4023cf:   00 53 6c                add    %dl,0x6c(%rbx)
  4023d2:   61                      (bad)
  4023d3:   76 65                   jbe    40243a
<_IO_stdin_used+0x1ba>
  4023d5:   2c 20                   sub    $0x20,%al
  4023d7:   74 68                   je     402441
<_IO_stdin_used+0x1c1>
  4023d9:   6f                      outsl  %ds:(%rsi),(%dx)
  4023da:   75 20                   jne    4023fc
<_IO_stdin_used+0x17c>
  4023dc:   68 61 73 74 20          push   $0x20747361
  4023e1:   73 6c                   jae    40244f
<_IO_stdin_used+0x1cf>
  4023e3:   61                      (bad)
  4023e4:   69 6e 20 6d 65 2e 20    imul   $0x202e656d,0x20(%rsi),
%ebp
  4023eb:   56                      push   %rsi
  4023ec:   69 6c 6c 61 69 6e 2c    imul   $0x202c6e69,0x61(%rsp,
%rbp,2),%ebp
  4023f3:   20
  4023f4:   74 61                   je     402457
<_IO_stdin_used+0x1d7>
  4023f6:   6b 65 20 6d             imul   $0x6d,0x20(%rbp),%esp
  4023fa:   79 20                   jns    40241c
<_IO_stdin_used+0x19c>
  4023fc:   70 75                   jo     402473
<_IO_stdin_used+0x1f3>
  4023fe:   72 73                   jb     402473
<_IO_stdin_used+0x1f3>
  402400:   65 2e 00 00             gs add %al,%gs:(%rax)
```

整点子 Python 代码简化操作：

```
# Given hex values, convert them to their ASCII characters
hex_values = "53 6c 61 76 65 2c 20 74 68 6f 75 20 68 61 73 74 20
73 6c 61 69 6e 20 6d 65 2e 20 56 69 6c 6c 61 69 6e 2c 20 74 61 6b
65 20 6d 79 20 70 75 72 73 65 2e 00"
ascii_string =
bytes.fromhex(hex_values).decode('ascii').rstrip('\x00')  # Remove
the null terminator at the end for display
ascii_string
```

查了下，出自《李尔王》：

```
'Slave, thou hast slain me. Villain, take my purse.'
```

我说怎么实验文档里给的示例与我生成的反汇编代码不一样呢，原来.....

phase_2

phase_2 函数本体：

```
0000000000400e8b <phase_2>:
  400e8b:   53                      push   %rbx
  400e8c:   48 83 ec 20             sub    $0x20,%rsp # 为什么腾了
32 Bytes 假使此地址为 a。
  400e90:   64 48 8b 04 25 28 00    mov    %fs:0x28,%rax # 段寄存器
2*16+8=40?
  400e97:   00 00
  400e99:   48 89 44 24 18          mov    %rax,0x18(%rsp) # %rsp
+ 24(a+24) 指向的位置放入了 %rax，留空给六个寄存器?
  400e9e:   31 c0                   xor    %eax,%eax # %eax = 0
  400ea0:   48 89 e6                mov    %rsp,%rsi # %rsp ->
%rsi a
  400ea3:   e8 c1 05 00 00          call   401469
<read_six_numbers>

  400ea8:   83 3c 24 00             cmpl   $0x0,(%rsp)
  400eac:   78 07                   js     400eb5 <phase_2+0x2a> #
(%rsp) < 0 就爆?

  400eae:   bb 01 00 00 00          mov    $0x1,%ebx # %ebx = 1
```

```
  400eb3:   eb 11                   jmp    400ec6 <phase_2+0x3b>

  400eb5:   e8 8d 05 00 00          call   401447 <explode_bomb>
  400eba:   eb f2                   jmp    400eae <phase_2+0x23> #
这句是干什么的，不都已经爆了吗？

  400ebc:   48 83 c3 01             add    $0x1,%rbx

  400ec0:   48 83 fb 06             cmp    $0x6,%rbx
  400ec4:   74 12                   je     400ed8 <phase_2+0x4d> #
满 6 回了，过关。

  400ec6:   89 d8                   mov    %ebx,%eax # %eax = %ebx
= 1
  400ec8:   03 44 9c fc             add    -0x4(%rsp,%rbx,4),%eax
# %eax += (%rsp + 4*%rbx - 4)
  400ecc:   39 04 9c                cmp    %eax,(%rsp,%rbx,4) #
(%rsp + %rbx*4) ?= %eax
  400ecf:   74 eb                   je     400ebc <phase_2+0x31> #
相等则继续判断
  # 造一组数据：
  # 0+1=1 1+2=3 3+3=6 6+4=10 10+5=15
  400ed1:   e8 71 05 00 00          call   401447 <explode_bomb>
  400ed6:   eb e4                   jmp    400ebc <phase_2+0x31>
  400ed8:   48 8b 44 24 18          mov    0x18(%rsp),%rax # 24
Bytes
  400edd:   64 48 33 04 25 28 00    xor    %fs:0x28,%rax
  400ee4:   00 00
  400ee6:   75 06                   jne    400eee <phase_2+0x63> #
爆栈
  400ee8:   48 83 c4 20             add    $0x20,%rsp
  400eec:   5b                      pop    %rbx
  400eed:   c3                      ret
  400eee:   e8 0d fc ff ff          call   400b00
<__stack_chk_fail@plt>
```

调用的read_six_numbers：

```
0000000000401469 <read_six_numbers>:
```

```
  401469:   48 83 ec 08             sub    $0x8,%rsp # 又腾了 8
Bytes a-8
  40146d:   48 89 f2                mov    %rsi,%rdx # %rsp->%rsi-
>%rdx a
  401470:   48 8d 4e 04             lea    0x4(%rsi),%rcx # a + 4-
>%rcx 动的只是地址
  401474:   48 8d 46 14             lea    0x14(%rsi),%rax # a +
20->%rax
  401478:   50                      push   %rax # a-8
  401479:   48 8d 46 10             lea    0x10(%rsi),%rax # a +
16->%rax
  40147d:   50                      push   %rax # a-4
  40147e:   4c 8d 4e 0c             lea    0xc(%rsi),%r9 # a + 12-
>%r9
  401482:   4c 8d 46 08             lea    0x8(%rsi),%r8 # a + 8-
>%r8
  401486:   be c3 25 40 00          mov    $0x4025c3,%esi
  40148b:   b8 00 00 00 00          mov    $0x0,%eax
  401490:   e8 0b f7 ff ff          call   400ba0
<__isoc99_sscanf@plt>
  401495:   48 83 c4 10             add    $0x10,%rsp # %rsp += 16
  401499:   83 f8 05                cmp    $0x5,%eax
  40149c:   7e 05                   jle    4014a3
<read_six_numbers+0x3a> # %eax <= 5，爆。
  40149e:   48 83 c4 08             add    $0x8,%rsp # %eax > 5，我
们安全了，暂时的。
  4014a2:   c3                      ret
  4014a3:   e8 9f ff ff ff          call   401447 <explode_bomb>
```

好奇 $0x4025c3 到底是哪块儿。

```
Disassembly of section .rodata:

0000000000402480 <array.3415>:

  4025c1:   2e 00 25 64 20 25 64    cs add %ah,0x64252064(%rip)
     # 6465462c <_end+0x6405081c>
  4025c8:   20 25 64 20 25 64       and    %ah,0x64252064(%rip)
     # 64654632 <_end+0x64050822>
  4025ce:   20 25 64 20 25 64       and    %ah,0x64252064(%rip)
     # 64654638 <_end+0x64050828>
  4025d4:   00 45 72                add    %al,0x72(%rbp)
```

Ghidra 分析所得：

```
                                  s_%d_%d_%d_%d_%d_%d_004025c3


  004025c3  25 64 20 25 64 20       ds    "%d %d %d %d %d %d"
            25 64 20 25 64 20
            25 64 20 25 64 00
```

phase_3

```
0000000000400ef3 <phase_3>:
  400ef3:   48 83 ec 18             sub    $0x18,%rsp
  400ef7:   64 48 8b 04 25 28 00    mov    %fs:0x28,%rax
  400efe:   00 00
  400f00:   48 89 44 24 08          mov    %rax,0x8(%rsp)
  400f05:   31 c0                   xor    %eax,%eax # %eax = 0
  400f07:   48 8d 4c 24 04          lea    0x4(%rsp),%rcx
  400f0c:   48 89 e2                mov    %rsp,%rdx
  400f0f:   be cf 25 40 00          mov    $0x4025cf,%esi # 读入两个
整数
  400f14:   e8 87 fc ff ff          call   400ba0
<__isoc99_sscanf@plt>
  400f19:   83 f8 01                cmp    $0x1,%eax # 没读够，爆。
  400f1c:   7e 10                   jle    400f2e <phase_3+0x3b>

  400f1e:   83 3c 24 07             cmpl   $0x7,(%rsp) # (%rsp) >
7 出错，总共8个分支。
```

```
  400f22:   77 42                   ja     400f66 <phase_3+0x73> #
jump if above，爆

  400f24:   8b 04 24                mov    (%rsp),%eax
  400f27:   ff 24 c5 40 24 40 00    jmp    *0x402440(,%rax,8) #
M[0x402440 + %rax * 8]
  400f2e:   e8 14 05 00 00          call   401447 <explode_bomb> #
爆
  400f33:   eb e9                   jmp    400f1e <phase_3+0x2b> #
仍不理解

#### Cases
# 以下全都是跳到400f77
  400f35:   b8 35 02 00 00          mov    $0x235,%eax
  400f3a:   eb 3b                   jmp    400f77 <phase_3+0x84>

  400f3c:   b8 a7 01 00 00          mov    $0x1a7,%eax
  400f41:   eb 34                   jmp    400f77 <phase_3+0x84>

  400f43:   b8 2b 02 00 00          mov    $0x22b,%eax
  400f48:   eb 2d                   jmp    400f77 <phase_3+0x84>

  400f4a:   b8 6c 00 00 00          mov    $0x6c,%eax
  400f4f:   eb 26                   jmp    400f77 <phase_3+0x84>

  400f51:   b8 f1 02 00 00          mov    $0x2f1,%eax
  400f56:   eb 1f                   jmp    400f77 <phase_3+0x84>

  400f58:   b8 3e 00 00 00          mov    $0x3e,%eax
  400f5d:   eb 18                   jmp    400f77 <phase_3+0x84>

  400f5f:   b8 48 02 00 00          mov    $0x248,%eax
  400f64:   eb 11                   jmp    400f77 <phase_3+0x84>
####

  400f66:   e8 dc 04 00 00          call   401447 <explode_bomb> #
爆，之前似乎对爆炸机制有所误解。

  400f6b:   b8 00 00 00 00          mov    $0x0,%eax
  400f70:   eb 05                   jmp    400f77 <phase_3+0x84>
```

```
# Case
  400f72:   b8 21 01 00 00          mov    $0x121,%eax
  400f77:   39 44 24 04             cmp    %eax,0x4(%rsp) #
(%rsp+4) ?= %eax 第二个数要与第一个数跳转的分支里的数对应
# 构造数据：
# 0 -> 400f72
# 1*256+2*16+1 = 256+32+1 = 289
# 0 289
  400f7b:   74 05                   je     400f82 <phase_3+0x8f> #
要顺利结束。
  400f7d:   e8 c5 04 00 00          call   401447 <explode_bomb> #
爆

  400f82:   48 8b 44 24 08          mov    0x8(%rsp),%rax
  400f87:   64 48 33 04 25 28 00    xor    %fs:0x28,%rax
  400f8e:   00 00
  400f90:   75 05                   jne    400f97 <phase_3+0xa4> #
爆栈
  400f92:   48 83 c4 18             add    $0x18,%rsp
  400f96:   c3                      ret
  400f97:   e8 64 fb ff ff          call   400b00
<__stack_chk_fail@plt>
```

$0x4025cf指的是什么呢

```
  00400f0f be  cf  25       MOV        ESI ,s_%d_%d_004025c3+12
                      = "%d %d"
           40  00
```

存放着对应的各个标签。

顺带，这里可以看出来采用的是小端序。

```
                          switchD_00400f27::switchdataD_00402440

    00402440 72  0f  40       addr       switchD_00400f27::caseD_0
             00  00  00
             00  00
    00402448 35  0f  40       addr       switchD_00400f27::caseD_1
```

```
                00  00  00
                00  00
    00402450 3c  0f  40        addr        switchD_00400f27::caseD_2
                00  00  00
                00  00
    00402458 43  0f  40        addr        switchD_00400f27::caseD_3
                00  00  00
                00  00
    00402460 4a  0f  40        addr        switchD_00400f27::caseD_4
                00  00  00
                00  00
    00402468 51  0f  40        addr        switchD_00400f27::caseD_5
                00  00  00
                00  00
    00402470 58  0f  40        addr        switchD_00400f27::caseD_6
                00  00  00
                00  00
    00402478 5f  0f  40        addr        switchD_00400f27::caseD_7
                00  00  00
                00  00
```

phase_4

```
0000000000400fdb <phase_4>:
  400fdb:   48 83 ec 18             sub    $0x18,%rsp
  400fdf:   64 48 8b 04 25 28 00    mov    %fs:0x28,%rax
  400fe6:   00 00
  400fe8:   48 89 44 24 08          mov    %rax,0x8(%rsp)
  400fed:   31 c0                   xor    %eax,%eax # %eax = 0
  400fef:   48 8d 4c 24 04          lea    0x4(%rsp),%rcx # 第二个输
入
  400ff4:   48 89 e2                mov    %rsp,%rdx # 应该是存第一个
输入吧
  400ff7:   be cf 25 40 00          mov    $0x4025cf,%esi # 读入两个
整数
  400ffc:   e8 9f fb ff ff          call   400ba0
<__isoc99_sscanf@plt>
  401001:   83 f8 02                cmp    $0x2,%eax
  401004:   75 06                   jne    40100c <phase_4+0x31> #
数量不对，爆
```

```
  401006:   83 3c 24 0e             cmpl   $0xe,(%rsp) # (%rsp) >
e 会爆。
  40100a:   76 05                   jbe    401011 <phase_4+0x36> #
jbe for unsigned, jle for signed
  40100c:   e8 36 04 00 00          call   401447 <explode_bomb>

# %edx a_1 = 14
# %esi a_2 = 0
# %edi a_3 = input_1
  401011:   ba 0e 00 00 00          mov    $0xe,%edx # %edx = e =
14
  401016:   be 00 00 00 00          mov    $0x0,%esi # %esi = 0
  40101b:   8b 3c 24                mov    (%rsp),%edi # %edi =
(%rsp)
  40101e:   e8 79 ff ff ff          call   400f9c <func4>
  401023:   83 f8 03                cmp    $0x3,%eax # %eax != 3 就
爆炸。
  # 第一个输入应当为 13
  401026:   75 07                   jne    40102f <phase_4+0x54>

  401028:   83 7c 24 04 03          cmpl   $0x3,0x4(%rsp) #
(%rsp+4) != 3 就爆炸
  # 第二个输入应当为 3
  40102d:   74 05                   je     401034 <phase_4+0x59>
  40102f:   e8 13 04 00 00          call   401447 <explode_bomb>

  401034:   48 8b 44 24 08          mov    0x8(%rsp),%rax
  401039:   64 48 33 04 25 28 00    xor    %fs:0x28,%rax
  401040:   00 00
  401042:   75 05                   jne    401049 <phase_4+0x6e>
  401044:   48 83 c4 18             add    $0x18,%rsp
  401048:   c3                      ret
  401049:   e8 b2 fa ff ff          call   400b00
<__stack_chk_fail@plt>


func4：

# %edx a_1
# %esi a_2
# %edi a_3
```

```
0000000000400f9c <func4>:
  400f9c:   48 83 ec 08             sub    $0x8,%rsp
  400fa0:   89 d0                   mov    %edx,%eax # %eax = a_1
  400fa2:   29 f0                   sub    %esi,%eax # %eax = a_1
- a_2
  400fa4:   89 c1                   mov    %eax,%ecx # %ecx = a_1
- a_2
  400fa6:   c1 e9 1f                shr    $0x1f,%ecx # %ecx 逻辑右
移31位，保留最高位。（0 或 1） 移动了个寂寞，几乎一定为 0。a_1 - a_2 都不太
可能这么大。
  400fa9:   01 c1                   add    %eax,%ecx # %ecx = (a_1
- a_2) >>logi 31 +  (a_1 - a_2)
  400fab:   d1 f9                   sar    %ecx # %ecx 符号右移1位 =
[(a_1 - a_2) >>logi 31 +  (a_1 - a_2)]/2
  400fad:   01 f1                   add    %esi,%ecx # %ecx =
[(a_1 - a_2) >>logi 31 +  (a_1 - a_2)]/2 + a_2
                                            # 化简一下 %ecx
= (a_1 - a_2)]/2 + a_2
                                            # 取中点
  400faf:   39 f9                   cmp    %edi,%ecx # %ecx ?= a_3
  400fb1:   7f 0e                   jg     400fc1 <func4+0x25> #
%ecx > a_3

  400fb3:   b8 00 00 00 00          mov    $0x0,%eax # %eax = 0
  400fb8:   39 f9                   cmp    %edi,%ecx # %ecx ?=
%edi
  400fba:   7c 11                   jl     400fcd <func4+0x31> #
%ecx < a_3
  400fbc:   48 83 c4 08             add    $0x8,%rsp
  400fc0:   c3                      ret
####
# a_2 ... ... ... %rcx ... .a_3. ... a_1
# a_1 = 14; a_2 = 0; a_3 = input_1
  #!!! %rcx 就是 %ecx
  # %ecx > a_3
  # 中点比 a_3 大，那就将右端点改为中点往左一点。
  400fc1:   8d 51 ff                lea    -0x1(%rcx),%edx # a_1 =
%rcx - 1
  400fc4:   e8 d3 ff ff ff          call   400f9c <func4>
  400fc9:   01 c0                   add    %eax,%eax # %eax *= 2
```

```
  400fcb:   eb ef                   jmp    400fbc <func4+0x20> # 顺
利

  # %eax = 0
  # %ecx < a_3
  # 中点比 a_3 小，那就将左端点改为中点往右一点。
  400fcd:   8d 71 01                lea    0x1(%rcx),%esi # %a_2 =
%rcx + 1
  # 那么这里进行的是 a_1 = 14; a_2 = 8; a_3 = 11; 这样的话，只会得到 1。
  #                 a_1 = 14; a_2 = 12; a_3 = 13;
  400fd0:   e8 c7 ff ff ff          call   400f9c <func4>

  # 3=2*1+1 1=2*0+1
  400fd5:   8d 44 00 01             lea    0x1(%rax,%rax,1),%eax #
%eax = 2*%rax+1
  400fd9:   eb e1                   jmp    400fbc <func4+0x20> # 顺
利
```

secret_phase

“只有当你在第4阶段的解后附加一特定字符串后” # 总觉得这话在诓我

到底在什么条件下才触发了呢？

破案了，确实是第四阶段的输入后放个urxvt，但是必须得等第五阶段也完事之后才会触发。

不仅如此，你还得把该问的输入放到最后一行，也就是phase_6底下再新增一行。

secret_phase函数本体

```
000000000040125f <secret_phase>:
  40125f:   53                      push   %rbx
  401260:   e8 43 02 00 00          call   4014a8 <read_line> # 再
读入行，所以该问输入应该得换行吧
# %edx a_1 = 10
# %esi a_2 = 0                                              # 所
以这两个是干什么的？
# %edi a_3 = *input
  401265:   ba 0a 00 00 00          mov    $0xa,%edx
  40126a:   be 00 00 00 00          mov    $0x0,%esi
```

```
  40126f:   48 89 c7                mov    %rax,%rdi
  401272:   e8 09 f9 ff ff          call   400b80 <strtol@plt>

# 是这里没区分好括号之类? 也不对吧，感觉这里直接返回一个数用不着存地址里。。。
# 我们令之后的 input 都表示的是转换后的 long int 的一立即数。
# %rbx = input
# %eax = input - 1
  401277:   48 89 c3                mov    %rax,%rbx
  40127a:   8d 40 ff                lea    -0x1(%rax),%eax
# input - 1 ?= 1000
  40127d:   3d e8 03 00 00          cmp    $0x3e8,%eax #
3*256+14*16+8 = 1000
  401282:   77 27                   ja     4012ab
<secret_phase+0x4c> # 超过1000直接爆炸。
# %edx a_1 = 10
# %esi a_2 = input
# %edi a_3 = $0x6030f0 ??? 像是数组基址。
  401284:   89 de                   mov    %ebx,%esi
  401286:   bf f0 30 60 00          mov    $0x6030f0,%edi
# 似乎 %eax 如果没有初始化，那么还是会保留input - 1。
  40128b:   e8 90 ff ff ff          call   401220 <fun7>
  401290:   83 f8 04                cmp    $0x4,%eax
  401293:   74 05                   je     40129a
<secret_phase+0x3b>
  401295:   e8 ad 01 00 00          call   401447 <explode_bomb> #
不等于 4 直接爆炸
# 所以要凑出来 %eax = 4
# 需要等于 40，但是，如何触发?
  40129a:   bf 08 24 40 00          mov    $0x402408,%edi # "Wow!
You've defused the secret stag
  40129f:   e8 3c f8 ff ff          call   400ae0 <puts@plt>
  4012a4:   e8 2d 03 00 00          call   4015d6 <phase_defused>
  4012a9:   5b                      pop    %rbx
  4012aa:   c3                      ret
  4012ab:   e8 97 01 00 00          call   401447 <explode_bomb>
  4012b0:   eb d2                   jmp    401284
<secret_phase+0x25>
```

secret_phase只在phase_defused中被调用：

```
00000000004015d6 <phase_defused>:
  4015d6:   48 83 ec 78             sub    $0x78,%rsp
  4015da:   64 48 8b 04 25 28 00    mov    %fs:0x28,%rax
  4015e1:   00 00
  4015e3:   48 89 44 24 68          mov    %rax,0x68(%rsp)
  4015e8:   31 c0                   xor    %eax,%eax
  4015ea:   83 3d 7b 21 20 00 06    cmpl   $0x6,0x20217b(%rip)
   # 60376c <num_input_strings>
  # 似乎得研究研究<read_line>
  # 是不是在检测下一条指令的对应位置？
  4015f1:   74 15                   je     401608
<phase_defused+0x32>

  4015f3:   48 8b 44 24 68          mov    0x68(%rsp),%rax
  4015f8:   64 48 33 04 25 28 00    xor    %fs:0x28,%rax
  4015ff:   00 00
  401601:   75 67                   jne    40166a
<phase_defused+0x94>
  401603:   48 83 c4 78             add    $0x78,%rsp
  401607:   c3                      ret

  # 这里前面并没有<read_line>，难道，其实在（特定位置）读入的时候就已经开始折腾这里的了？
  # 正好<phrase_4>里头接收2个输入，这里算是接续？应该不用换行
  401608:   4c 8d 44 24 10          lea    0x10(%rsp),%r8 # 16 这个应该是字符串的开头吧
  40160d:   48 8d 4c 24 0c          lea    0xc(%rsp),%rcx # 12
  401612:   48 8d 54 24 08          lea    0x8(%rsp),%rdx # 8 这两个整数不知道什么用处
  401617:   be 19 26 40 00          mov    $0x402619,%esi # s_%d_%d_%s_00402619
  40161c:   bf 70 38 60 00          mov    $0x603870,%edi # input_strings[240]
  401621:   e8 7a f5 ff ff          call   400ba0
<__isoc99_sscanf@plt>
  401626:   83 f8 03                cmp    $0x3,%eax # 读入了3个东西
  401629:   74 0c                   je     401637
<phase_defused+0x61>

  40162b:   bf 58 25 40 00          mov    $0x402558,%edi # "Congratulations! You've defused the bomb!"
```

```
  401630:   e8 ab f4 ff ff          call   400ae0 <puts@plt>
  401635:   eb bc                   jmp    4015f3
<phase_defused+0x1d>

  401637:   be 22 26 40 00          mov    $0x402622,%esi #
s_urxvt_00402622 "urxvt"
  40163c:   48 8d 7c 24 10          lea    0x10(%rsp),%rdi # 接下来
好比较字符串。
  401641:   e8 04 fd ff ff          call   40134a
<strings_not_equal>
  401646:   85 c0                   test   %eax,%eax
  401648:   75 e1                   jne    40162b
<phase_defused+0x55> # 不相等，寄。
  40164a:   bf f8 24 40 00          mov    $0x4024f8,%edi #
s_Curses,_you've_found_the_secret_p_004024f8
  40164f:   e8 8c f4 ff ff          call   400ae0 <puts@plt>
  401654:   bf 20 25 40 00          mov    $0x402520,%edi #
s_But_finding_it_and_solving_it_ar_00402520
  401659:   e8 82 f4 ff ff          call   400ae0 <puts@plt>
  40165e:   b8 00 00 00 00          mov    $0x0,%eax
  401663:   e8 f7 fb ff ff          call   40125f <secret_phase>
  401668:   eb c1                   jmp    40162b
<phase_defused+0x55>
  40166a:   e8 91 f4 ff ff          call   400b00
<__stack_chk_fail@plt>
```

fun7

```
0000000000401220 <fun7>:
# %edx a_1
# %esi a_2 = input
# %edi a_3
  401220:   48 85 ff                test   %rdi,%rdi # %rdi 为 0 则
爆炸。
  401223:   74 34                   je     401259 <fun7+0x39>
  401225:   48 83 ec 08             sub    $0x8,%rsp
# a_1 = (a_3) = 0x24 = 32+4= 36
# a_2 肯定不能上来就等于 36
```

```
# 错误示例：  原因是最外层的调用最后算。
# 应该有 a_1 <= a_2，这样才能先赋0，再加1，之后再乘2，再乘2。
# a_2 应该是等于 40，过程如下：
# a_1 < a_2 = 40
# a_3' = (a_3 + 16), (a_3') = 50, %eax = 1
# a_1' = (a_3') > a_2 = 40
# a_3'' = (a_3' + 8), (a_3'') = 45, %eax = 2
# a_1'' = (a_3'') > a_2 = 40
# a_3''' = (a_3'' + 8), (a_3''') = 40, %eax = 4

# 所以也最先该触发x2的情形。
# a_1 = 36 > a_2 = 7
# a_3' = (a_3 + 8), (a_3') = 8, %eax = 2 * %eax
# a_1 = (a_3') = 8 > a_2 = 7
# a_3' = ((a_3 + 8) + 8), (a_3') = 6, %eax = 2 * %eax
# a_1 = (a_3') = 6 < a_2 = 7
# a_3' = (((a_3 + 8) + 8) + 16), (a_3') = 7, %eax = 1



# 所指向的内容其实又是特定数组的基址
# a_1 ?= a_2
  401229:   8b 17                   mov    (%rdi),%edx # a_1 =
(a_3) = M[$0x6030f0] = 36
  40122b:   39 f2                   cmp    %esi,%edx # a_1 = (a_3)
?= a_2
  40122d:   7f 0e                   jg     40123d <fun7+0x1d>
# a_1 <= a_2
  40122f:   b8 00 00 00 00          mov    $0x0,%eax # %eax = 0
  401234:   39 f2                   cmp    %esi,%edx # a_1 ?= a_2
  401236:   75 12                   jne    40124a <fun7+0x2a>
# a_1 == a_2
  401238:   48 83 c4 08             add    $0x8,%rsp
  40123c:   c3                      ret

# a_1 > a_2
  40123d:   48 8b 7f 08             mov    0x8(%rdi),%rdi # a_3 =
(a_3 + 8)
  # a_3 = $0x6030f0 -> (a_3 + 8) = 00603110【8】
  # (a_3 + 8) = 00603110 -> ((a_3 + 8) + 8) =  00603190【6】
```

```
  # (a_3 + 8) = 00603110 -> ((a_3 + 8) + 16) =  00603150【0x16=22】
  # ((a_3 + 8) + 8) =  00603190 ->  (((a_3 + 8) + 8) + 16) =
00603250【7】
  401241:   e8 da ff ff ff          call   401220 <fun7>
  401246:   01 c0                   add    %eax,%eax # 调用完自身，
%eax *= 2
# 出偶数，应该是得从这吧。
  401248:   eb ee                   jmp    401238 <fun7+0x18> # 返
回。

# 我们应该是需要这样的地址：(((a_3 + 16) + 8) + 8)
# a_1 < a_2
  40124a:   48 8b 7f 10             mov    0x10(%rdi),%rdi # a_3 =
(a_3 + 16)
  # a_3 = $0x6030f0 -> (a_3 + 16) = 00603130【0x32=48+2=50】
  # (a_3 + 16) = 00603110 -> ((a_3 + 16) + 8) =  00603170
【0x2d=32+13=45】
  # (a_3 + 16) = 00603110 -> ((a_3 + 16) + 16) =  006031b0
【0x6b=96+11=107】
  # ((a_3 + 16) + 8) =  00603170 ->  (((a_3 + 16) + 8) + 8) =
006031d0【0x28=32+8=40】
  # 难道还是顺序错了？最外层应该是x2，中间层也x2，最内层x2+1（实际是从0到1）
  # 真事儿。
  40124e:   e8 cd ff ff ff          call   401220 <fun7>
  401253:   8d 44 00 01             lea    0x1(%rax,%rax,1),%eax #
调用完自身，%eax = 2*%rax+1
  401257:   eb df                   jmp    401238 <fun7+0x18>

# 爆
  401259:   b8 ff ff ff ff          mov    $0xffffffff,%eax
  40125e:   c3                      ret
```

让我们看看 $0x6030f0 里头放的什么：

```
                             n1

  006030f0 24  00  00       undefine
           00  00  00
           00  00  10
```

```
006030f0 24              undefine  24h                    [0]
006030f1 00              undefine  00h                    [1]
006030f2 00              undefine  00h                    [2]
006030f3 00              undefine  00h                    [3]
006030f4 00              undefine  00h                    [4]
006030f5 00              undefine  00h                    [5]
006030f6 00              undefine  00h                    [6]
006030f7 00              undefine  00h                    [7]
# 小端序，(a_3 + 8) = 0x603110
006030f8 10              undefine  10h                    [8]
      ?  ->  00603110
006030f9 31              undefine  31h                    [9]
006030fa 60              undefine  60h                    [10]
006030fb 00              undefine  00h                    [11]
006030fc 00              undefine  00h                    [12]
006030fd 00              undefine  00h                    [13]
006030fe 00              undefine  00h                    [14]
006030ff 00              undefine  00h                    [15]
# (a_3 + 16) = 0x603130
00603100 30              undefine  30h                    [16]
       ?  ->  00603130
00603101 31              undefine  31h                    [17]
00603102 60              undefine  60h                    [18]
00603103 00              undefine  00h                    [19]
00603104 00              undefine  00h                    [20]
00603105 00              undefine  00h                    [21]
00603106 00              undefine  00h                    [22]
00603107 00              undefine  00h                    [23]
```

其他的几个需要读的数组也都是这个样子。

这里多次出现了<num_input_strings>，但是<num_input_strings>到底是如何自增的。

```
0000000000004014a8 <read_line>:
  4014a8:   48 83 ec 08             sub    $0x8,%rsp
  4014ac:   b8 00 00 00 00          mov    $0x0,%eax
  4014b1:   e8 50 ff ff ff          call   401406 <skip>
  4014b6:   48 85 c0                test   %rax,%rax
  4014b9:   74 63                   je     40151e <read_line+0x76>
```

```
  4014bb:   8b 35 ab 22 20 00       mov    0x2022ab(%rip),%esi
   # 60376c <num_input_strings>
  4014c1:   48 63 c6                movslq %esi,%rax
  4014c4:   48 8d 14 80             lea    (%rax,%rax,4),%rdx
  4014c8:   48 c1 e2 04             shl    $0x4,%rdx
  4014cc:   48 81 c2 80 37 60 00    add    $0x603780,%rdx
  4014d3:   48 c7 c1 ff ff ff ff    mov    $0xffffffffffffffff,
%rcx
  4014da:   b8 00 00 00 00          mov    $0x0,%eax
  4014df:   48 89 d7                mov    %rdx,%rdi
  4014e2:   f2 ae                   repnz scas %es:(%rdi),%al
  4014e4:   48 f7 d1                not    %rcx
  4014e7:   48 83 e9 01             sub    $0x1,%rcx
  4014eb:   83 f9 4e                cmp    $0x4e,%ecx
  4014ee:   0f 8f 9c 00 00 00       jg     401590 <read_line+0xe8>
  4014f4:   83 e9 01                sub    $0x1,%ecx
  4014f7:   48 63 c9                movslq %ecx,%rcx
  4014fa:   48 63 c6                movslq %esi,%rax
  4014fd:   48 8d 04 80             lea    (%rax,%rax,4),%rax
  401501:   48 c1 e0 04             shl    $0x4,%rax
  401505:   c6 84 01 80 37 60 00    movb   $0x0,0x603780(%rcx,
%rax,1)
  40150c:   00
  40150d:   8d 46 01                lea    0x1(%rsi),%eax
  401510:   89 05 56 22 20 00       mov    %eax,0x202256(%rip)
   # 60376c <num_input_strings>
  401516:   48 89 d0                mov    %rdx,%rax
  401519:   48 83 c4 08             add    $0x8,%rsp
  40151d:   c3                      ret
  40151e:   48 8b 05 2b 22 20 00    mov    0x20222b(%rip),%rax
   # 603750 <stdin@@GLIBC_2.2.5>
  401525:   48 39 05 44 22 20 00    cmp    %rax,0x202244(%rip)
   # 603770 <infile>
  40152c:   74 19                   je     401547 <read_line+0x9f>
  40152e:   bf f3 25 40 00          mov    $0x4025f3,%edi
  401533:   e8 78 f5 ff ff          call   400ab0 <getenv@plt>
  401538:   48 85 c0                test   %rax,%rax
  40153b:   74 1e                   je     40155b <read_line+0xb3>
  40153d:   bf 00 00 00 00          mov    $0x0,%edi
  401542:   e8 89 f6 ff ff          call   400bd0 <exit@plt>
  401547:   bf d5 25 40 00          mov    $0x4025d5,%edi
```

```
  40154c:   e8 8f f5 ff ff          call   400ae0 <puts@plt>
  401551:   bf 08 00 00 00          mov    $0x8,%edi
  401556:   e8 75 f6 ff ff          call   400bd0 <exit@plt>
  40155b:   48 8b 05 ee 21 20 00    mov    0x2021ee(%rip),%rax
   # 603750 <stdin@@GLIBC_2.2.5>
  401562:   48 89 05 07 22 20 00    mov    %rax,0x202207(%rip)
   # 603770 <infile>
  401569:   b8 00 00 00 00          mov    $0x0,%eax
  40156e:   e8 93 fe ff ff          call   401406 <skip>
  401573:   48 85 c0                test   %rax,%rax
  401576:   0f 85 3f ff ff ff       jne    4014bb <read_line+0x13>
  40157c:   bf d5 25 40 00          mov    $0x4025d5,%edi
  401581:   e8 5a f5 ff ff          call   400ae0 <puts@plt>
  401586:   bf 00 00 00 00          mov    $0x0,%edi
  40158b:   e8 40 f6 ff ff          call   400bd0 <exit@plt>
  401590:   bf fe 25 40 00          mov    $0x4025fe,%edi
  401595:   e8 46 f5 ff ff          call   400ae0 <puts@plt>
  40159a:   8b 05 cc 21 20 00       mov    0x2021cc(%rip),%eax
   # 60376c <num_input_strings>
  4015a0:   8d 50 01                lea    0x1(%rax),%edx
  4015a3:   89 15 c3 21 20 00       mov    %edx,0x2021c3(%rip)
   # 60376c <num_input_strings>
  4015a9:   48 98                   cltq
  4015ab:   48 6b c0 50             imul   $0x50,%rax,%rax
  4015af:   48 be 2a 2a 2a 74 72    movabs $0x636e7572742a2a2a,
%rsi
  4015b6:   75 6e 63
  4015b9:   48 bf 61 74 65 64 2a    movabs $0x2a2a2a64657461,%rdi
  4015c0:   2a 2a 00
  4015c3:   48 89 b0 80 37 60 00    mov    %rsi,0x603780(%rax)
  4015ca:   48 89 b8 88 37 60 00    mov    %rdi,0x603788(%rax)
  4015d1:   e8 71 fe ff ff          call   401447 <explode_bomb>
```

phase_5

phase_5 函数：

```
0000000000040104e <phase_5>:
  40104e:   48 83 ec 18             sub    $0x18,%rsp
  401052:   64 48 8b 04 25 28 00    mov    %fs:0x28,%rax
  401059:   00 00
```

```
  40105b:   48 89 44 24 08          mov    %rax,0x8(%rsp)
  401060:   31 c0                   xor    %eax,%eax
  401062:   48 8d 4c 24 04          lea    0x4(%rsp),%rcx
  401067:   48 89 e2                mov    %rsp,%rdx
  40106a:   be cf 25 40 00          mov    $0x4025cf,%esi # 与
phase_3 一样
  40106f:   e8 2c fb ff ff          call   400ba0
<__isoc99_sscanf@plt>
  401074:   83 f8 01                cmp    $0x1,%eax
  401077:   7e 57                   jle    4010d0 <phase_5+0x82> #
%eax <= 1，爆

  401079:   8b 04 24                mov    (%rsp),%eax # x_1 ->
%eax
  40107c:   83 e0 0f                and    $0xf,%eax # 掩码，保留末4
位。
  40107f:   89 04 24                mov    %eax,(%rsp) # 存回去。x_1
%= 16
  401082:   83 f8 0f                cmp    $0xf,%eax # 比较
  401085:   74 2f                   je     4010b6 <phase_5+0x68> #
%eax 等于f，爆。
  # %eax < 16
  401087:   b9 00 00 00 00          mov    $0x0,%ecx # %ecx = 0
  40108c:   ba 00 00 00 00          mov    $0x0,%edx


  # 像循环
  401091:   83 c2 01                add    $0x1,%edx # %edx += 1
  # 累计三次
  401094:   48 98                   cltq   # 符号拓展 %eax
  401096:   8b 04 85 80 24 40 00    mov    0x402480(,%rax,4),%eax
# (402480 + 4*%rax) -> %eax
  # 往前回溯
  # %rax = 6 -> %eax = f
  # %rax = 14 -> %eax = 6
  # %rax = 2 -> %eax = 14
  # 所以 %rax 初值，即 (x_1 % 16) == 2
  40109d:   01 c1                   add    %eax,%ecx # %ecx +=
%eax
  # %ecx = 0 + 14 + 6 + 15 = 35
  ## 以上，可令 x_1 = 2, x_2 = 35，即为可行输入
```

```
  40109f:   83 f8 0f                cmp    $0xf,%eax
  4010a2:   75 ed                   jne    401091 <phase_5+0x43> #
%eax != f -> 回去
  # %eax = f


  4010a4:   c7 04 24 0f 00 00 00    movl   $0xf,(%rsp) # x_1 = f
  4010ab:   83 fa 03                cmp    $0x3,%edx
  4010ae:   75 06                   jne    4010b6 <phase_5+0x68> #
爆
  # %edx = 3
  4010b0:   39 4c 24 04             cmp    %ecx,0x4(%rsp)
  4010b4:   74 05                   je     4010bb <phase_5+0x6d>
  4010b6:   e8 8c 03 00 00          call   401447 <explode_bomb> #
爆
  # x_2 = %ecx = 35
  4010bb:   48 8b 44 24 08          mov    0x8(%rsp),%rax
  4010c0:   64 48 33 04 25 28 00    xor    %fs:0x28,%rax
  4010c7:   00 00
  4010c9:   75 0c                   jne    4010d7 <phase_5+0x89>
  4010cb:   48 83 c4 18             add    $0x18,%rsp
  4010cf:   c3                      ret

  4010d0:   e8 72 03 00 00          call   401447 <explode_bomb> #
爆
  4010d5:   eb a2                   jmp    401079 <phase_5+0x2b>
  4010d7:   e8 24 fa ff ff          call   400b00
<__stack_chk_fail@plt>
```

0x402480对应的地址：

array.3415

```
        00402480 0a             undefined10Ah
    [0]
        00402481 00             undefined100h
    [1]
        00402482 00             undefined100h
    [2]
```

```
                00402483 00             undefined100h
[3]
                00402484 02             undefined102h
[4]
                00402485 00             undefined100h
[5]
                00402486 00             undefined100h
[6]
                00402487 00             undefined100h
[7]
                00402488 0e             undefined10Eh
[8]
                00402489 00             undefined100h
[9]
                0040248a 00             undefined100h
[10]
                0040248b 00             undefined100h
[11]
                0040248c 07             undefined107h
[12]
                0040248d 00             undefined100h
[13]
                0040248e 00             undefined100h
[14]
                0040248f 00             undefined100h
[15]
                00402490 08             undefined108h
[16]
                00402491 00             undefined100h
[17]
                00402492 00             undefined100h
[18]
                00402493 00             undefined100h
[19]
                00402494 0c             undefined10Ch
[20]
                00402495 00             undefined100h
[21]
                00402496 00             undefined100h
[22]
```

```
        00402497 00             undefined100h
[23]
        00402498 0f             undefined10Fh
[24]
        00402499 00             undefined100h
[25]
        0040249a 00             undefined100h
[26]
        0040249b 00             undefined100h
[27]
        0040249c 0b             undefined10Bh
[28]
        0040249d 00             undefined100h
[29]
        0040249e 00             undefined100h
[30]
        0040249f 00             undefined100h
[31]
        004024a0 00             undefined100h
[32]
        004024a1 00             undefined100h
[33]
        004024a2 00             undefined100h
[34]
        004024a3 00             undefined100h
[35]
        004024a4 04             undefined104h
[36]
        004024a5 00             undefined100h
[37]
        004024a6 00             undefined100h
[38]
        004024a7 00             undefined100h
[39]
        004024a8 01             undefined101h
[40]
        004024a9 00             undefined100h
[41]
        004024aa 00             undefined100h
[42]
```

```
        004024ab 00             undefined100h
[43]
        004024ac 0d             undefined10Dh
[44]
        004024ad 00             undefined100h
[45]
        004024ae 00             undefined100h
[46]
        004024af 00             undefined100h
[47]
        004024b0 03             undefined103h
[48]
        004024b1 00             undefined100h
[49]
        004024b2 00             undefined100h
[50]
        004024b3 00             undefined100h
[51]
        004024b4 09             undefined109h
[52]
        004024b5 00             undefined100h
[53]
        004024b6 00             undefined100h
[54]
        004024b7 00             undefined100h
[55]
        004024b8 06             undefined106h
[56]
        004024b9 00             undefined100h
[57]
        004024ba 00             undefined100h
[58]
        004024bb 00             undefined100h
[59]
        004024bc 05             undefined105h
[60]
        004024bd 00             undefined100h
[61]
        004024be 00             undefined100h
[62]
```

```
                004024bf 00              undefined100h
        [63]
```

数组全部内容：

```
0xa, 0x2, 0xe, 0x7, 0x8, 0xc, 0xf, 0xb, 0x0, 0x4, 0x1, 0xd, 0x3,
0x9, 0x6, 0x5
10 , 2 , 14 , 7 , 8 , 12 , 15 , 11 , 0 , 4 , 1 , 13 , 3 , 9 , 6 ,
5
```

phase_6

phase_6本体：

```
00000000004010dc <phase_6>:
  4010dc:   41 56                   push   %r14
  4010de:   41 55                   push   %r13
  4010e0:   41 54                   push   %r12
  4010e2:   55                      push   %rbp
  4010e3:   53                      push   %rbx
  4010e4:   48 83 ec 60             sub    $0x60,%rsp
  4010e8:   64 48 8b 04 25 28 00    mov    %fs:0x28,%rax
  4010ef:   00 00
  4010f1:   48 89 44 24 58          mov    %rax,0x58(%rsp) #
5*16+8=88 Bytes 留空给11个寄存器，还是22个？
  4010f6:   31 c0                   xor    %eax,%eax # %eax = 0
  4010f8:   48 89 e6                mov    %rsp,%rsi # 一会儿好把六个
变量存到栈里
  4010fb:   e8 69 03 00 00          call   401469
<read_six_numbers>
  # 这六个姑且算作数组内 a[0], a[1], a[2] ... a[5]
  401100:   49 89 e4                mov    %rsp,%r12 # %r12 = a 基
址
  401103:   49 89 e5                mov    %rsp,%r13 # %r13 = a
  401106:   41 be 00 00 00 00       mov    $0x0,%r14d # %r14d = 0
  40110c:   eb 25                   jmp    401133 <phase_6+0x57>
                # no.1-eax

  # -> no.1-compare -> no.1-loop -> no.2
  # 纯纯的****
```

```
  40110e:   e8 34 03 00 00          call   401447 <explode_bomb> #
爆
  401113:   eb 2d                   jmp    401142 <phase_6+0x66>


                # no.1-ebx
  401115:   83 c3 01                add    $0x1,%ebx  # %ebx =
%ebx + 1 = 2
  401118:   83 fb 05                cmp    $0x5,%ebx
  40111b:   7f 12                   jg     40112f <phase_6+0x53>
       # %ebx > 5，跳 40112f
  # %ebx <= 5，直接往下走。

                # no.1-loop
  40111d:   48 63 c3                movslq %ebx,%rax # %rax = %ebx
= %r14d = 1 -> 2 -> 3

         # 2 -> 3 -> 4
  401120:   8b 04 84                mov    (%rsp,%rax,4),%eax #
%eax = a[%rax] = a[1] -> a[2]
  401123:   39 45 00                cmp    %eax,0x0(%rbp) # %eax
== a[0] 则爆
  401126:   75 ed                   jne    401115 <phase_6+0x39> #
a[0] != a[1] -> a[2]    # no.1-ebx，往上
  # 也就是，后五个数都不能与第一个数相等？
  401128:   e8 1a 03 00 00          call   401447 <explode_bomb> #
爆
  40112d:   eb e6                   jmp    401115 <phase_6+0x39>

  # 我猜测，是这六个数两两之间不相等
  # for(int i = 1; i <= 6; ++i)
  #     判断是否小于等于 6
  #     for(int j = i + 1; j <= 5; ++j)
  #         a[i - 1] ?= a[j]
  40112f:   49 83 c5 04             add    $0x4,%r13 # %r13 += 4


                # no.1-eax
```

```
  401133:   4c 89 ed                mov    %r13,%rbp # %rbp = %r13
= a -> &a[1]
  401136:   41 8b 45 00             mov    0x0(%r13),%eax # %eax =
(%r13) = a[0] -> a[1]
  40113a:   83 e8 01                sub    $0x1,%eax # %eax = %eax
- 1 = a[0]-1 -> a[1]-1
  40113d:   83 f8 05                cmp    $0x5,%eax
  401140:   77 cc                   ja     40110e <phase_6+0x32> #
%eax > 5, 爆
  # %eax <= 5 即 a[0] -> a[1] <= 6
  # 能不能存负数
  # 我们假定里头的所有数都是1~6，不含0。
  401142:   41 83 c6 01             add    $0x1,%r14d # %r14d =
%r14d + 1 = 1 -> 2
  401146:   41 83 fe 06             cmp    $0x6,%r14d
  40114a:   74 05                   je     401151 <phase_6+0x75> #
%r14d 等于 6 则跳 no.2

  40114c:   44 89 f3                mov    %r14d,%ebx # %r14d 不到
6，%ebx = %r14d = 1 -> 2
  # 内循环的起点。
  40114f:   eb cc                   jmp    40111d <phase_6+0x41>
                # 跳 no.1-loop，往上。




                # no.2
  401151:   49 8d 4c 24 18          lea    0x18(%r12),%rcx # %r12
= a; %rcx = %r12 + 0x18 = &a[6]
  401156:   ba 07 00 00 00          mov    $0x7,%edx # %edx = 7

  40115b:   89 d0                   mov    %edx,%eax # %eax = %edx
= 7
  40115d:   41 2b 04 24             sub    (%r12),%eax # %eax =
%eax - (%r12) = 7 - a[0]
  401161:   41 89 04 24             mov    %eax,(%r12) # a[0] =
%eax = 7 - a[0]
```

```
  401165:   49 83 c4 04              add    $0x4,%r12 # %r12 = %r12
+ 4 = &a[1]
  401169:   4c 39 e1                 cmp    %r12,%rcx # &a[6] =
%rcx ?= %r12 = &a[1]
  40116c:   75 ed                    jne    40115b <phase_6+0x7f>
  # 要把 a[0] -> a[5] 全都变成 7 - a[i]




  # 已经遍历了 a[0] -> a[5]
  40116e:   be 00 00 00 00           mov    $0x0,%esi # %esi = 0
  401173:   eb 1a                    jmp    40118f <phase_6+0xb3>
                # no.3

  # 不是，到底是 32-bit 还是 64-bit 啊 我****

  # 怪不得每次都要从$0x6032d0开始，这其实就是遍历链表的过程。
  # %rdx = $0x6032d0                                        # node1
  401175:   48 8b 52 08              mov    0x8(%rdx),%rdx
                 # no.3-ecx
  # %rdx' = [%rdx + 8] = [$0x6032d8] = 0x6032e0           # node2
        %ecx = 2 的时候匹配上
  # %rdx'' = [%rdx' + 8] = [$0x6032e8] = 0x6032f0         # node3
        %ecx = 3 的时候匹配上
  # %rdx''' = [%rdx'' + 8] = [$0x6032f8] = 0x603300       # node4
        %ecx = 4 的时候匹配上
  # %rdx'''' = [%rdx''' + 8] = [$0x603308] = 0x603310     # node5
        %ecx = 5 的时候匹配上
  # %rdx''''' = [%rdx'''' + 8] = [$0x603318] = 0x603320   # node6
        %ecx = 6 的时候匹配上
  # %rdx'''''' = [%rdx''''' + 8] = [$0x603328] = 0
  401179:   83 c0 01                 add    $0x1,%eax # %eax = %eax
+ 1 = 2;
  40117c:   39 c8                    cmp    %ecx,%eax # %eax ?=
%ecx = a[0]
  40117e:   75 f5                    jne    401175 <phase_6+0x99>
  # %eax = 2, 3, 4, 5
```

```
  # %ecx = %eax 匹配上了                                                    #
a[8], a[10], ... , a[18]
  401180:    48 89 54 f4 20           mov    %rdx,0x20(%rsp,%rsi,8)
# a[2*%rsi + 32/4] = a[2*%rsi + 8] = %rdx
  # 还是 a[%rsi + 4] = %rdx
  # a'[4] ... a'[9]，哦，其实这个是相当于把原本的 a[0], ..., a[5] 放在了
前三个共24字节内，之后的新的a'[4], ... ,a'[9]是8字节的
  # 尽管如此，前面的诸如 0x6032e0 此处仍假定为只是32位的（高32位为 0）。
  # 相当于把 node 的地址存到了数组里，a'[4] ... a'[9]的先后顺序是与a[0],
a[1], ... , a[5] 的顺序一致的。
  # 大胆猜测，a[0], a[1], ... , a[5]的元素标记的是在链表中的“位置”。（第
a[0]个、第a[1]个……，对应a'[4], ... , a'[9]里各自存的 node 地址）
  401185:    48 83 c6 01              add    $0x1,%rsi # %rsi = %rsi
+ 1
  401189:    48 83 fe 06              cmp    $0x6,%rsi # %rsi ?= 6
  40118d:    74 14                    je     4011a3 <phase_6+0xc7>
                  # no.4
  # 直到 6 个都匹配完
  # a[8], a[10], ... , a[18]
  # a[4] ... a[9] 这个看着更顺眼
  40118f:    8b 0c b4                 mov    (%rsp,%rsi,4),%ecx #
%ecx=a[%rsi]=a[0]    # no.3
  401192:    b8 01 00 00 00           mov    $0x1,%eax # %eax = 1
  401197:    ba d0 32 60 00           mov    $0x6032d0,%edx # 之后会有
(%edx) = 0x00027a，立即数的 mov
                                      #  0x6032d0          # node1
  40119c:    83 f9 01                 cmp    $0x1,%ecx # %ecx = a[0]
?= 1
  40119f:    7f d4                    jg     401175 <phase_6+0x99> #
%ecx > 1           # no.3-ecx，往上
  # %ecx <= 1
  # 到底能不能等于 0 啊话说我****
  4011a1:    eb dd                    jmp    401180 <phase_6+0xa4>
```

```
  # 我们读入的是各个元素在链表中的位置a[0], a[1], a[2], ... , a[5]
(0<=i<=5, 1<=a[i]<=6)
  # 我们新开了一个数组a'[4], a'[5], a'[6], ... , a'[9]（存放着上边那些位
置对应的链表 node 地址）
  # 链表 node 的各地址存储的是，当前 node 指向的下一 node 的地址。
  # 对于地址，我们采用&a[i]和a[i]以及a[i]->v的方式来区分。
  # 地址里套地址，好歹毒啊，我****。

                    # no.4
  4011a3:   48 8b 5c 24 20          mov    0x20(%rsp),%rbx # %rbx
= a'[4] 存放的是 a'[4] 的值，也就是 node 地址
  4011a8:   48 8b 44 24 28          mov    0x28(%rsp),%rax # %rax
= a'[5] 存放的是 a'[5] 的值，也就是 node 地址
  # 要将 %rax 放到 %rbx + 0x8 这一地址的内存中。
  4011ad:   48 89 43 08             mov    %rax,0x8(%rbx)  # (%rbx
+ 8) = %rax 即 [a'[4] + 8]->v = a'[5]
                                    # [a'[4] + 8] 指的是 “a'[4] 存的
地址物理上相邻下一个 node 的值”
                                    # 为什么要给它赋值成这样？
  4011b1:   48 8b 54 24 30          mov    0x30(%rsp),%rdx # %rdx
= a'[6]
  4011b6:   48 89 50 08             mov    %rdx,0x8(%rax)  # (%rax
+ 8) = %rdx 即 [a'[5] + 8]->v = a'[6]
  4011ba:   48 8b 44 24 38          mov    0x38(%rsp),%rax # %rax
= a'[7]
  4011bf:   48 89 42 08             mov    %rax,0x8(%rdx)  # (%rdx
+ 8) = %rax 即 [a'[6] + 8]->v = a'[7]
  4011c3:   48 8b 54 24 40          mov    0x40(%rsp),%rdx # %rdx
= a'[8]
  4011c8:   48 89 50 08             mov    %rdx,0x8(%rax)  # (%rax
+ 8) = %rdx 即 [a'[7] + 8]->v = a'[8]
  4011cc:   48 8b 44 24 48          mov    0x48(%rsp),%rax # %rax
= a'[9]
  4011d1:   48 89 42 08             mov    %rax,0x8(%rdx)  # (%rdx
+ 8) = %rax 即 [a'[8] + 8]->v = a'[9]
  4011d5:   48 c7 40 08 00 00 00    movq   $0x0,0x8(%rax)  #
[a'[9] + 8]->v = 0
  4011dc:   00
  4011dd:   bd 05 00 00 00          mov    $0x5,%ebp # %ebp = 5
  4011e2:   eb 09                   jmp    4011ed <phase_6+0x111>
                # 4011ed
```

```
  # (%rbx) >= %eax

                # 4011e4
  4011e4:    48 8b 5b 08             mov    0x8(%rbx),%rbx # %rbx =
(%rbx + 8) = [a'[4] + 8]->v = a'[5]
  4011e8:    83 ed 01                sub    $0x1,%ebp # %ebp --;
  4011eb:    74 11                   je     4011fe <phase_6+0x122>
# %ebp == 0
  # %ebp = 1

                # 4011ed
  4011ed:    48 8b 43 08             mov    0x8(%rbx),%rax # %rax =
(%rbx + 8) = [a'[4] + 8]->v = a'[5]
                                                  # %rax =
(%rbx + 8) = [a'[5] + 8]->v = a'[6]
                                                  # %rax =
(%rbx + 8) = [a'[6] + 8]->v = a'[7]
                                                  # %rax =
(%rbx + 8) = [a'[7] + 8]->v = a'[8]
                                                  # %rax =
(%rbx + 8) = [a'[8] + 8]->v = a'[9]
  4011f1:    8b 00                   mov    (%rax),%eax # %eax =
(%rax) = a'[5]->v
                                                 # %eax =
(%rax) = a'[6]->v
                                                 # %eax =
(%rax) = a'[7]->v
                                      # %eax = (%rax) = a'[8]->v
                                                 # %eax =
(%rax) = a'[9]->v

  # 这就是为什么node有16字节，而之前只是一直在用高8字节？
  4011f3:    39 03                   cmp    %eax,(%rbx) # [a'[4]]-
>v >= %eax = a'[5]->v
                                                # [a'[5]]-
>v >= %eax = a'[6]->v
                                                # [a'[6]]-
>v >= %eax = a'[7]->v
```

```
                                                    # [a'[7]]-
>v >= %eax = a'[8]->v
                                                    # [a'[8]]-
>v >= %eax = a'[9]->v
  4011f5:   7d ed                   jge    4011e4 <phase_6+0x108>
# (%rbx) >= %eax # 4011e4，往上。
  # 必须是降序

  4011f7:   e8 4b 02 00 00          call   401447 <explode_bomb> #
爆

  4011fc:   eb e6                   jmp    4011e4 <phase_6+0x108>

  4011fe:   48 8b 44 24 58          mov    0x58(%rsp),%rax
  401203:   64 48 33 04 25 28 00    xor    %fs:0x28,%rax
  40120a:   00 00
  40120c:   75 0d                   jne    40121b <phase_6+0x13f>
# 爆栈
  40120e:   48 83 c4 60             add    $0x60,%rsp
  401212:   5b                      pop    %rbx
  401213:   5d                      pop    %rbp
  401214:   41 5c                   pop    %r12
  401216:   41 5d                   pop    %r13
  401218:   41 5e                   pop    %r14
  40121a:   c3                      ret
  40121b:   e8 e0 f8 ff ff          call   400b00
<__stack_chk_fail@plt>
```

一直也没有搞懂到底call 401447 <explode_bomb>完后紧跟着还要执行的代码段是什么意思。

node1

```
  006032d0  7a 02 00 00                 undefined4
 0000027Ah
  006032d4  01                          ??                  01h
  006032d5  00                          ??                  00h
  006032d6  00                          ??                  00h
  006032d7  00                          ??                  00h
```

```
                    PTR_node2_006032d8

006032d8  e0 32 60 00 00 00          addr                node2
          00 00
                    node2[8]

                    node2

006032e0  53 03 00 00 02 00          undefined1[16]
          00 00 f0 32 60 00
          00 00 00 00
                    node3

006032f0  99 03 00 00 03 00          undefined1[16]
          00 00 00 33 60 00
          00 00 00 00
                    node4

00603300  36 01 00 00 04 00          undefined1[16]
          00 00 10 33 60 00
          00 00 00 00
                    node5

00603310  49 02 00 00 05 00          undefined1[16]
          00 00 20 33 60 00
          00 00 00 00
                    node6

00603320  8a 00 00 00 06 00          undefined1[16]
          00 00 00 00 00 00
          00 00 00 00
```

被坑害了， node1 里的 undefined4 应该（？）是规定了一个 4 Bytes 的值，之后那个 PTR_node2_006032d8 是明确地表示出了8字节的指针，中间部分看上去是一个索引，问题很大程度上出现在了我之前以为前8个字节都是表示着一个64位的整数。

```
struct Node {
    int value;          // 节点值
    int index;          // 猜测中间部分是一个索引（因为都是01, 02, 03,
..., 06这种的）
    struct Node* next;  // 指向下一个节点的指针
};
```

这下终于有头绪了：

```
# 根据小端序排列，将给定的节点中的4字节整数值提取出来
# 每个节点的起始4字节按小端序存储整数值

# 定义每个节点起始的4字节数据
nodes_bytes = {
    "node1": [0x7a, 0x02, 0x00, 0x00],  # 0x0000027a
    "node2": [0x53, 0x03, 0x00, 0x00],  # 0x00000353
    "node3": [0x99, 0x03, 0x00, 0x00],  # 0x00000399
    "node4": [0x36, 0x01, 0x00, 0x00],  # 0x00000136
    "node5": [0x49, 0x02, 0x00, 0x00],  # 0x00000249
    "node6": [0x8a, 0x00, 0x00, 0x00],  # 0x0000008a
}

# 提取每个节点的整数值
node_values = {node: int.from_bytes(bytes_list, "little") for
node, bytes_list in nodes_bytes.items()}

node_values
```

提取出来的结果：

```
{'node1': 634,
 'node2': 851,
 'node3': 921,
 'node4': 310,
 'node5': 585,
 'node6': 138}
```

```
3 2 1 5 4 6 // 7-a[i]
4 5 6 2 3 1 // 7-a[i]
```

四、实验总结

毁灭吧，前面的详细分析和这之后的引用还不够吗？逢山开路，遇水架桥，如此而已。

过程中 GPT-4 明确对我的思路有重大帮助的地方是，其告诉我`phase_6`中 node 的结构里存储的值是32位的，不知晓这一点，最后一阶段即使前面的思路全对，也无法产生正确的结果。

此外，我非常感激当我让它检验我对`phase_6`汇编代码的理解（指所写注释的正确性）时，它的回答：

> *总的来说，你的注释和理解基本正确，表明你对代码的逻辑有深刻的理解。一些细节，如确切的内存布局和操作的上下文，可能需要更多代码或背景信息来完全理解，但你的分析已经很接近真实功能了。*

我谢谢它。

x86中的32位和64位寄存器

Yes, of course. It is the same register, no matter if you address it using 8/16/32/64 bit mode.

https://stackoverflow.com/questions/43623012/do-32-and-64-bit-values-share-the-same-register-space

```
|63..32|31..16|15-8|7-0|
               |AH.|AL.|
               |AX.....|
       |EAX............|
|RAX.................|
```

https://stackoverflow.com/questions/228200/why-is-there-not-a-register-that-contains-the-higher-bytes-of-eax/228367#228367

https://stackoverflow.com/questions/11177137/why-do-x86-64-instructions-on-32-bit-registers-zero-the-upper-part-of-the-full-6

`test %eax, %eax`

`test eax,eax` is just an optimized `cmp eax,0`. It's written this way to save space, as `cmp eax,0` must encode that zero directly into your program as `00 00 00 00` (yes, that's 4 bytes that are each zero), which wastes space doing the same thing to the zero flag that `test eax, eax` does.

https://stackoverflow.com/questions/75075395/contradictory-behavior-of-jne-x86-assembly-instruction

https://stackoverflow.com/questions/147173/testl-eax-against-eax

https://reverseengineering.stackexchange.com/questions/15184/what-does-the-test-instruction-do

`rep ret`

https://stackoverflow.com/questions/20526361/what-does-rep-ret-mean

C String

https://stackoverflow.com/questions/6282198/reading-string-from-input-with-space-character

https://stackoverflow.com/questions/1247989/how-do-you-allow-spaces-to-be-entered-using-scanf

C Char

大受震撼

In C, the type of a character *constant* like `'a'` is actually an `int`, with size of 4 (or some other implementation-dependent value). In C++, the type is `char`, with size of 1. This is one of many small differences between the two languages.

https://stackoverflow.com/questions/2172943/why-is-the-size-of-a-character-sizeofa-dif

ferent-in-c-and-c

In C++, `sizeof('a') == sizeof(char) == 1`. This makes intuitive sense, since `'a'` is a character literal, and `sizeof(char) == 1` as defined by the standard.

In C however, `sizeof('a') == sizeof(int)`. That is, it appears that C character literals are actually integers. Does anyone know why? I can find plenty of mentions of this C quirk but no explanation for why it exists.

https://stackoverflow.com/questions/433895/why-are-c-character-literals-ints-instead-of-chars

Byte & Word Addressing

https://stackoverflow.com/questions/48129466/why-do-we-use-byte-addressing-instead-of-word-addressing

`js` instruction

`JS` will jump if the sign flag is set (by an earlier instruction). CMP will always modify the flags by performing a subtraction, in this case `%cl - %al`.

`CMP`: **Subtracts source from destination.**

https://stackoverflow.com/questions/21872334/what-does-js-do-in-assembly-x86

非常好缩写、有/无符号。

http://www.unixwiz.net/techtips/x86-jumps.html

`FS` segment register

https://stackoverflow.com/questions/10810203/what-is-the-fs-gs-register-intended-for

The x86 architecture supports segmentation. Instructions which access memory can use segment register based addressing mode. The following notation is used to address a byte within a segment:

> *Segment-register:Byte-address*

The segment base address is added to the Byte-address to compute the resulting virtual address which is accessed. This allows to access multiple instances of data with the identical Byte-address, i.e. the same code. The selection of a particular instance is purely based on the base-address in the segment register.

The FS segment is commonly used to address Thread Local Storage (TLS). FS is usually managed by runtime code or a threading library. Variables declared with the '__thread' storage class specifier are instantiated per thread and the compiler emits the FS: address prefix for accesses to these variables. Each thread has its own FS base address so common code can be used without complex address offset calculations to access the per thread instances. Applications should not use FS for other purposes when they use runtimes or threading libraries which manage the per thread FS.

https://www.kernel.org/doc/html/next/x86/x86_64/fsgs.html

`JLE` instruction

https://stackoverflow.com/questions/9617877/assembly-jg-jnle-jl-jnge-after-cmp

`LEA` instruction

也只有在`LEA`指令下，`offset(base, index, multiplier)`才会被视作所指向的地址，而非其地址所指向的内容。

非常赞同：

Wouldn't it have been cleaner to extend the `mov` instruction and leave off the brackets?
`MOV EDX, EBX + 8*EAX + 4`

By replacing LEA with a specialized MOV you keep the syntax clean: [] brackets are always the equivalent of dereferencing a pointer in C. Without brackets, you always deal with the pointer itself.

https://stackoverflow.com/questions/1658294/whats-the-purpose-of-the-lea-instruction

`__isoc99_sscanf`

This function return the number of input items successfully matched and assigned, which can be fewer than provided for, or even zero in the event of an

early matching failure.

https://stackoverflow.com/questions/69829654/what-does-isoc99-sscanf-do

https://stackoverflow.com/questions/56444576/asm-isoc99-scanf-after-function-declaration

On x86_64, parameters are passed in registers, so your call to scanf has 3 parameters stored in 3 registers:

- `rdi` pointer to the string `"%u %u"`, the format to parse (two unsigned integers)
- `rsi` should be a `unsigned *`, pointer to where to put the first parsed integer
- `rdx` pointer to where to put the second parsed integer.

https://stackoverflow.com/questions/72492532/in-which-register-does-the-scanf-function-store-input-values

"address" of a register

https://stackoverflow.com/questions/5301292/is-there-is-a-way-to-get-the-address-of-a-register

https://stackoverflow.com/questions/52308185/are-cpu-general-purpose-registers-usually-memory-mapped

indirect addressing

```
movl (%edx), %eax
```

Means "the memory at the address that's stored in the register".

https://stackoverflow.com/questions/61004313/what-do-parentheses-surrounding-a-register-mean

https://stackoverflow.com/questions/69967899/indirect-adressing-in-assembly-x86

https://stackoverflow.com/questions/46123822/how-to-load-the-contents-of-the-memory-address-stored-in-a-register-in-assembly

The complete AT&T base/index register syntax is:

```
offset(base, index, multiplier)
```

https://stackoverflow.com/questions/18650093/what-does-a-comma-in-a-parenthesis-mean-in-the-att-syntax-for-x86-assembly

```
GAS memory operand      NASM memory operand
------------------      -------------------

100                     [100]
%es:100                 [es:100]
(%eax)                  [eax]
(%eax,%ebx)             [eax+ebx]
(%ecx,%ebx,2)           [ecx+ebx*2]
(,%ebx,2)               [ebx*2]
-10(%eax)               [eax-10]
%ds:-10(%ebp)           [ds:ebp-10]
Example instructions,
mov %ax,    100
mov %eax,   -100(%eax)
```

https://stackoverflow.com/questions/6819957/what-does-the-bracket-in-movl-eax-eax-mean/6820015#6820015

https://stackoverflow.com/questions/27936196/a-couple-of-questions-about-base-indexscale-disp-and-att-dispbase-inde

`%al` register

- `EAX` **is the full 32-bit value**
- `AX` **is the lower 16-bits**
- `AL` **is the lower 8 bits**
- `AH` **is the bits 8 through 15** (zero-based), the top half of AX

Parentheses

- 在 `lea 0x4(%rsi), %rcx` 指令中，`lea`（Load Effective Address）的作用是计算括号内给出的地址表达式的值，并将这个计算结果（即地址）加载到 `%rcx` 寄存器中。这里，括号内的表达式 `0x4(%rsi)` 表示 `%rsi` 寄存器的值加上 4，这个结

果是一个地址，被直接存储在 `%rcx` 中，不进行内存访问。

- 在 `movq 8(%rbp), %rdx` 指令中，`movq` 是数据传送指令，用于将数据从源位置移动到目标位置。这里的括号 `8(%rbp)` 表示的是一个内存地址，计算方式是 `%rbp` 寄存器的值加上 8。与 `lea` 指令不同，`movq` 会访问该地址指向的内存位置，将那里的数据（64位或者8字节，因为是 `movq`）加载到 `%rdx` 寄存器中。

因此，`lea` 指令的括号用于构造地址表达式，结果是一个地址，而 `movq` 指令的括号用于指定一个内存地址，指令会访问该地址并加载或存储数据。简单来说，`lea` 与地址计算相关，而 `movq` 与实际的内存访问操作相关。⚠ **ChatGPT 4** 生成（其措辞可能会让人疑惑）

end of array

C arrays don't have an end marker.

It is your responsibility as the programmer to keep track of the allocated size of the array to make sure you don't try to access element outside the allocated size.

If you do access an element outside the allocated size, the result is undefined behaviour.

https://stackoverflow.com/questions/53579155/end-of-array-in-c-language

Silver Bullet of NSA

Ghidra (pronounced GEE-druh; /ˈgiːdrə/)

https://ghidra-sre.org/

Asterisk

The line

```
jmpq    *0x402680(,%rax,8)
```

would be described in RTN by:

```
RIP <- M[0x402680 + (8 * RAX)]
```

where `M` is the system memory.

As such, we can write the general form `jmpq *c(r1, r2, k)`, where `c` is an immediate constant, `r1` and `r2` are general purpose registers and `k` is either 1 (default), 2, 4 or 8:

```
RIP <- M[c + r1 + (k * r2)]
```

https://stackoverflow.com/questions/9223756/what-does-an-asterisk-before-an-address-mean-in-x86-64-att-assembly

Intel Little Endian

https://stackoverflow.com/questions/6018386/is-x86-64-machine-language-big-endian

`__stack_chk_fail`

The interface `__stack_chk_fail()` shall abort the function that called it with a message that a stack overflow has been detected. The program that called the function shall then exit.

The interface `__stack_chk_fail()` does not check for a stack overflow itself. It merely reports one when invoked.

http://refspecs.linux-foundation.org/LSB_4.1.0/LSB-Core-generic/LSB-Core-generic/libc---stack-chk-fail-1.html

`shr` & `sar` instruction

- The `shr` or `sar` instruction is used to shift the bits of the operand destination to the right, by the number of bits specified in the count operand.
- Bits shifted beyond the destination are first shifted into the CF flag.
- Equivalent to dividing by 2

```
mov eax, 0xA  ; set EAX to 0xA (1010 in binary)
shr eax, 2    ; shifts 2 bits to the right in EAX, now equal to
0x2 (0010 in binary)
```

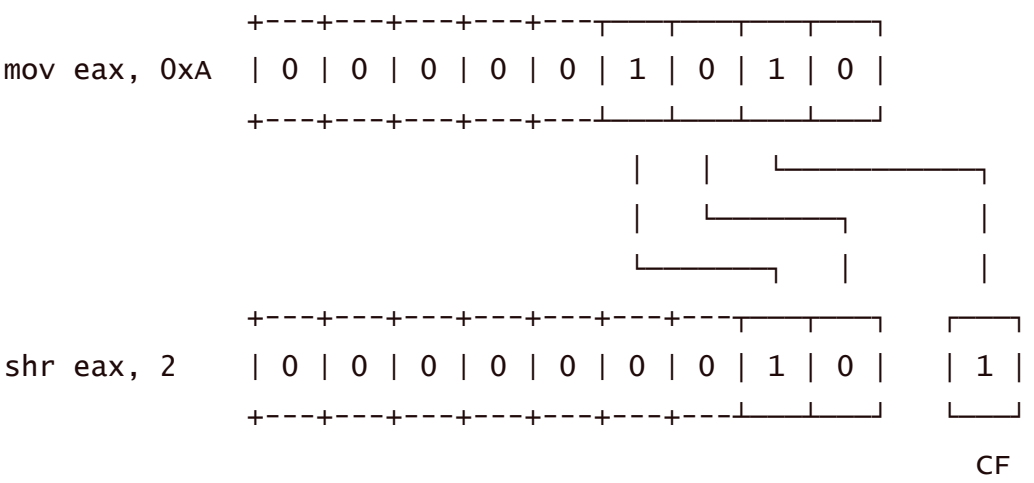

https://www.aldeid.com/wiki/X86-assembly/Instructions/shr

OPCODE	MNEMONIC	DESCRIPTION
D2 /5	SHR r/m8,CL	Unsigned divide r/m8 by 2, CL times.
D2 /7	SAR r/m8,CL	Signed divide* r/m8 by 2, CL times.

https://c9x.me/x86/html/file_module_x86_id_285.html

> *if you perform `SHR` 00110000b you would end up with 00011000b*

If you shifted one bit to the right, yes. You can specify the shift amount, so it's not fixed at 1.

> *However, if you were to perform `SHR` on 11111111b you would end up with an incorrect answer*

If you did a logical shift of 11111111b one bit to the right you'd get 01111111b. Whether you consider that to be incorrect or not depends entirely on what you're trying to achieve. If you wanted to preserve the sign you should've used `SAR`.

https://stackoverflow.com/questions/30644708/shr-and-sar-commands

`strtol`

Interprets an integer value in a byte string pointed to by `str`.

If successful, an integer value corresponding to the contents of `str` is returned.

https://en.cppreference.com/w/c/string/byte/strtol

The `strtol()` function converts a character string to a long integer value. The parameter *nptr* points to a sequence of characters that can be interpreted as a numeric value of type long int.

https://www.ibm.com/docs/es/i/7.3?topic=lf-strtol-strtoll-convert-character-string-long-long-long-integer

`cltq`

- Convert Long To Quad (`cltq`): AT&T-style
- quad (aka quad-word) == 8 bytes
- long (AT&T) == double-word (Intel) == 4 bytes

It sign extends `%eax` from 4 bytes into 8 bytes.

https://stackoverflow.com/questions/6555094/what-does-cltq-do-in-assembly

数据表示

```
00000000006032d0 <node1>:
  6032d0:   7a 02                   jp     6032d4 <node1+0x4>
  6032d2:   00 00                   add    %al,(%rax)
  6032d4:   01 00                   add    %eax,(%rax)
  6032d6:   00 00                   add    %al,(%rax)
  6032d8:   e0 32                   loopne 60330c <node4+0xc>
  6032da:   60                      (bad)
  6032db:   00 00                   add    %al,(%rax)
  6032dd:   00 00                   add    %al,(%rax)
    ...

00000000006032e0 <node2>:
  6032e0:   53                      push   %rbx
  6032e1:   03 00                   add    (%rax),%eax
  6032e3:   00 02                   add    %al,(%rdx)
  6032e5:   00 00                   add    %al,(%rax)
  6032e7:   00 f0                   add    %dh,%al
```

```
  6032e9:    32 60 00                 xor    0x0(%rax),%ah
  6032ec:    00 00                    add    %al,(%rax)
    ...

00000000006032f0 <node3>:
  6032f0:    99                       cltd
  6032f1:    03 00                    add    (%rax),%eax
  6032f3:    00 03                    add    %al,(%rbx)
  6032f5:    00 00                    add    %al,(%rax)
  6032f7:    00 00                    add    %al,(%rax)
  6032f9:    33 60 00                 xor    0x0(%rax),%esp
  6032fc:    00 00                    add    %al,(%rax)
    ...

0000000000603300 <node4>:
  603300:    36 01 00                 ss add %eax,(%rax)
  603303:    00 04 00                 add    %al,(%rax,%rax,1)
  603306:    00 00                    add    %al,(%rax)
  603308:    10 33                    adc    %dh,(%rbx)
  60330a:    60                       (bad)
  60330b:    00 00                    add    %al,(%rax)
  60330d:    00 00                    add    %al,(%rax)
    ...

0000000000603310 <node5>:
  603310:    49 02 00                 rex.WB add (%r8),%al
  603313:    00 05 00 00 00 20        add    %al,0x20000000(%rip)
     # 20603319 <_end+0x1ffff509>
  603319:    33 60 00                 xor    0x0(%rax),%esp
  60331c:    00 00                    add    %al,(%rax)
    ...

0000000000603320 <node6>:
  603320:    8a 00                    mov    (%rax),%al
  603322:    00 00                    add    %al,(%rax)
  603324:    06                       (bad)
    ...
```

从您提供的内容看来，这是一个将链表节点直接映射到其内存地址表示的尝试。不过，看起来输出更像是用objdump或类似工具直接从二进制执行文件中提取的信息，并且以一种

对应汇编指令的形式呈现。这种表示法实际上并不直接反映链表节点的数据结构，而是显示了程序二进制文件中相应地址处的原始字节序列如何被解释为汇编指令。

这段输出实际上并不代表链表节点的真实结构或内容。在二进制文件中，数据（如链表节点的值和指针）和代码（如函数指令）通常位于不同的段中。当你用如`objdump`这样的工具查看整个程序的内容时，这些工具会尝试将所有内容都解释为指令，即使某些部分实际上是数据。

在你提供的例子中：

- 每个`node`标签下的字节序列被解释为一系列的汇编指令，但这只是因为工具试图对任何给定的字节序列进行解码。
- 比如，地址`6032d0`处的字节`7a 02`被解释为`jp 6032d4`指令，但实际上这可能只是一个整数值`0x027a`，正如之前提到的链表节点值。
- 接下来的字节通常代表一个指向另一节点的指针，但在这里，它们被错误地解释为汇编指令或者`(bad)`标记（表示无法将字节序列解释为有效的汇编指令）。

要正确理解链表节点的结构，你应该基于你对程序逻辑的了解，以及如何在程序中定义和操作这些节点的知识。正如之前讨论的，每个节点通常包含一个或多个数据字段（例如，一个整数值或其他类型的标识符）和一个或多个指向其他节点的指针。

如果你有这些节点的C语言结构定义，或者程序的源代码，那将是理解这些节点如何在内存中布局的最直接方式。反之，如果你正在尝试通过分析二进制文件来理解这个结构，你需要更加小心，不能直接将二进制内容作为指令序列来解释。⚠ **ChatGPT 4** 生成

`undefined4`和`undefined1[16]`

- `undefined4 0000027Ah`：这表示在给定地址处有一个4字节（32位）的未定义数据，其值为`0x027A`。在这个上下文中，“未定义”意味着该工具（可能是一个反汇编器或类似的工具）没有足够的信息来确定这些字节代表的确切数据类型，但它知道这是一个4字节长的值。这很可能是链表节点的整数值部分。
- `undefined1[16]`：这表示在给定地址处有16字节的未定义数据。这个表示法没有明确地拆分这16字节的结构，比如哪些是数据值，哪些是指向其他节点的指针。但是，根据您先前描述的节点结构（一个整数值加上一个指针），我们可以推断这16字节很可能被分为两部分：一个用于存储节点的值（通常是前4字节），另一个用于存储指向下一个节点的指针（剩下的字节）。

后续节点显示为`undefined1[16]`，原因可能与工具如何解释和展示内存内容有关。有时候，工具可能会在首次识别到特定类型的数据时给出更具体的信息（如`undefined4`），但在后续相似的结构中，它可能会选择一种更通用的表示方式（如`undefined1[16]`）。⚠ **ChatGPT 4** 生成