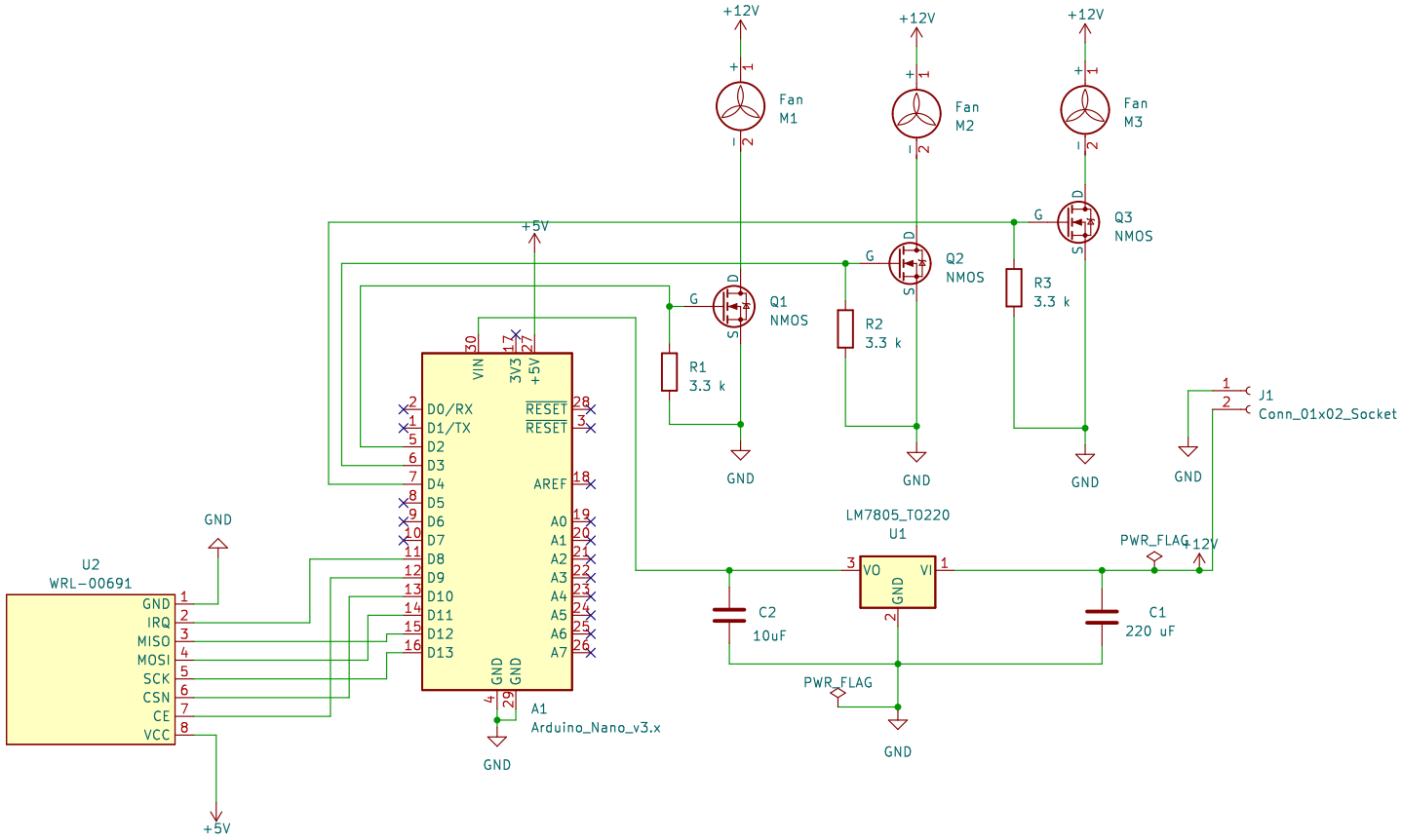

Designed by Luke Cepza
NeuroTechs ResearchGroup
NeuroSense

Sheet: /
File: Air.kicad_sch

Title: Caress Module PCB

Size: A4	Date: 2023-07-19	**Rev: 2**
KiCad E.D.A. eeschema 7.0.6		Id: 1/1