Electrical and Computer Engineering
Montana State University (MSU)

EEL 489R -- Electrical Engineering Design II
XX.XX.2025
Senior Capstone Final Project Report

Temperature Activated Heating System

Design Engineers:
Lucas Harting

Project Customer:
Corey Mettler
Electrical and Computer Engineering Faculty

Signature Page

Prepared By

_____ _____

Lucas Harting **XX.XX.2025**

Approval:

_____ _____

Senior Engineer: {advisor's name} Date

I certify that this document is ready to be sent to the project client provided that the requested changes/edits within are made and the course instructors also approve delivery.

Executive Summary

Montana State University Electrical & Computer Engineering Department
Lucas Harting
Team 16a

This project presents the design, fabrication, and verification of a fully autonomous doghouse heating system that activates based on ambient temperature to provide thermal comfort for outdoor animals in cold environments. The initiative addresses an often-overlooked need: in many communities, domestic dogs are exposed to prolonged subfreezing conditions in uninsulated shelters. Such exposure poses risks to animal health, including hypothermia and frostbite, particularly for short-haired breeds, senior animals, or those in poor health. Existing heating solutions often rely on continuous operation, manual switching, or expensive infrastructure, making them impractical or unsafe for widespread use.

The objective of this project was to develop a low-cost, energy-efficient, and autonomous heating system that activates within a specific temperature range (0°F to 40°F) and automatically deactivates when the ambient temperature rises above that threshold. To achieve this, the system was designed around a closed-loop feedback control architecture that continuously monitored environmental conditions and adjusted heating output accordingly. A heating pad was selected as the primary heating method because it delivers localized warmth efficiently without the need to heat the entire air volume of the doghouse, minimizing energy waste. The system's control logic incorporated pulse-width modulation (PWM) to regulate the power sent to the heating pad, allowing smoother temperature control, reduced energy consumption, and safer operation as the pad approached its thermal limit. Paired with two temperature sensors, the system measures both the temperature of the ambient air as well as the surface temperature of the heating pad.

The heating system was successfully constructed on a prototyping platform and tested across a range of controlled environments, including freezers, refrigerators, and outdoor conditions, to simulate realistic winter scenarios. A detailed verification plan was created to evaluate system performance against key functional requirements: activation timing, temperature control accuracy, heating effectiveness, and safety margins. The results demonstrated that the system consistently activated heating when ambient temperatures fell within the target range and deactivated once the environment warmed beyond the threshold, confirming that the control strategy functioned as intended.

Temperature readings remained within ±2°F of external reference measurements, validating the accuracy and reliability of the sensing and control subsystems. All

activation and deactivation events occurred well within the one-minute maximum response time requirement, and temperature regulation was maintained safely as the pad approached its designed maximum of 115°F. These results collectively confirm that the design meets its functional requirements.

Beyond technical performance, the system demonstrates real-world scalability and flexibility. It is adaptable for off-grid deployment scenarios when paired with alternative power sources and has broader potential applications in kennels, animal shelters, and livestock enclosures. Furthermore, the project establishes a solid foundation for future development, with planned enhancements such as wireless monitoring, mobile app control, remote data access, and additional safety features.

Overall, the project successfully met all defined objectives and specifications. It provides a validated engineering solution to a critical animal welfare issue, offering a practical, affordable, and autonomous system for improving outdoor animal comfort in cold environments. The deliberate design choices made throughout development—emphasizing precise feedback control, efficient localized heating, and safe autonomous operation—ensured that the final product performs reliably and lays strong groundwork for future innovations in autonomous environmental control systems.

Table of Contents

Page

SIGNATURE PAGE II

EXECUTIVE SUMMARY III

TABLE OF CONTENTS IV

1. 7

1.1 7
1.2 7
1.3 7
1.3.1 8
1.3.2 **Error! Bookmark not defined.**
1.3.3 11

2. 13

2.1 13
2.2 14
2.3 **Error! Bookmark not defined.**
2.4 14

3. 14

3.1 **Error! Bookmark not defined.**
3.1.1 **Error! Bookmark not defined.**
3.1.2 **Error! Bookmark not defined.**
3.2 **Error! Bookmark not defined.**
3.2.1 **Error! Bookmark not defined.**
3.2.2 **Error! Bookmark not defined.**
3.3 **Error! Bookmark not defined.**
3.3.1 **Error! Bookmark not defined.**
3.3.2 **Error! Bookmark not defined.**

4. **Error! Bookmark not defined.**

4.1 **Error! Bookmark not defined.**
4.2 **Error! Bookmark not defined.**
4.3 **Error! Bookmark not defined.**
4.4 **Error! Bookmark not defined.**

5. **Error! Bookmark not defined.**

5.1 **Error! Bookmark not defined.**
5.2 **Error! Bookmark not defined.**

6. **Error! Bookmark not defined.**

7. **Error! Bookmark not defined.**

REFERENCES **16**
APPENDIX A (TITLE) **18**

1. Introduction

1.1 Project Motivation

Bozeman, Montana is home to many residents who have canine companions, creating a strong community of pet lovers. However, the region is also characterized by rapidly varying and often harsh weather conditions, including a wide temperature range. This can make it extremely difficult to keep dogs comfortable during inclement weather.

While traditional doghouses provide basic shelter, they often do not offer sufficient insulation or temperature control to keep dogs comfortable during cold weather. Therefore, there is a clear need for an advanced heating solution specifically designed to enhance the thermal comfort of dogs in cold climates. By developing a doghouse equipped with an autonomous heating system that maintains optimal temperatures, the project will directly address the needs of pets in Bozeman's challenging winter conditions.

1.2 Project Description

Traditional doghouses often fall short in providing adequate comfort for dogs, especially during cold weather. To address this challenge, a specialized heating system will be developed that autonomously maintains optimal temperatures within a doghouse, ensuring comfort for dogs. This system will operate independently, focused solely on heating to keep the internal environment of the doghouse warm when the temperature drops below a predefined threshold. The project aims to activate the heating system based on real-time temperature monitoring, prioritizing the well-being of the dog. By leveraging efficient energy use, this approach seeks to deliver a reliable and sustainable solution for maintaining warmth in doghouses during cold seasons.

1.3 Project Background

To comprehensively understand the heating system project for doghouses, the following sections will provide background information exclusively related to the development and implementation of autonomous heating systems. Areas of interest include microcontroller applications for temperature regulation, and the specifics of heating systems suitable for doghouse environments. The following will offer a detailed

analysis of the project considerations for effectively maintaining optimal comfort for dogs through a dedicated heating system.

1.3.1 Initial State of the Project [AI]

The focus of this project addresses a significant shortfall in traditional doghouse designs, particularly in their inability to provide thermal comfort during winter conditions. The sponsor, the Electrical and Computer Engineering Department at Montana State University, recognizes the need for a doghouse that can maintain an optimal and safe temperature to enhance the comfort of dogs living outdoors. Given Bozeman, Montana's extreme winter conditions, with temperatures often remaining below freezing, there is need for a doghouse heating system that operates efficiently and autonomously to protect dogs from the cold.[1]

A proposed heating system is designed to endure the cold climate that is typical of northern regions. The device must function reliably in a range of environmental conditions including snow, ice, wind, and sub-zero Fahrenheit temperatures. This involves maintaining operational integrity in the face of moisture and freezing conditions and ensuring that the heating system can autonomously adjust to changing temperatures to provide consistent warmth without manual intervention.

Originally, the project envisioned a comprehensive smart doghouse equipped with a microgrid system, ventilation, heating, and connectivity to a mobile application for remote monitoring. However, after reassessment of project goals, resources, and direct needs, the focus has been narrowed significantly. The current iteration concentrates on developing an autonomous heating system for outdoor doghouses. The shift in project structure allows the team to allocate resources more effectively and address the most immediate need—thermal regulation for outdoor doghouses. The scaled-down focus enhances project feasibility and ensures that primary objectives are met without dilution of effort.

While the scope of the project is confined to heating, the design accommodates future expansion possibilities. The system's architecture is laid out such that it could later be integrated into a more extensive smart doghouse system, which might include features such as renewable energy integration, enhanced ventilation, and mobile connectivity. This prospective system could communicate with an owner's mobile device to provide real-time updates on the doghouse temperature environment and heating system status, thereby aligning with original project motivations.

The initial state of the project reflects a well-considered approach to meeting the sponsor's needs within operational and environmental constraints. It sets a solid foundation for a focused development effort aimed at delivering a critical solution to enhance dog comfort in winter conditions. The project's adaptability in design ensures readiness for future enhancements, making it a sustainable and forward-looking endeavor.

1.3.2 Technology Review [AI]

A survey of commercially available heating systems for pet enclosures reveals several widely used solutions such as resistive heating mats, plug-in pad heaters, and thermally regulated pet beds. Notable examples include the K&H Lectro-Soft Outdoor Heated Bed and the ASL Solutions Dog Palace Floor Heater [2], [3]. While these products provide a baseline level of warmth for animals, they exhibit considerable limitations when evaluated for deployment in harsh, cold-climate environments such as Bozeman, Montana. In particular, issues arise in the areas of energy efficiency, durability, responsiveness to environmental conditions, and electrical safety.

Many existing systems operate with binary or fixed-output heat control, drawing constant power once activated regardless of ambient conditions. Temperature regulation is often accomplished using simple thermostatic switches embedded within the heating surface. These switches engage or disengage the heater at pre-set temperatures without continuous environmental sensing. As a result, heating performance tends to be either excessive or inadequate during transitional conditions. Such limitations present serious drawbacks in applications where energy availability is constrained or where over-temperature conditions pose a risk to animal safety.

The majority of products available on the market are designed for alternating current (AC) wall power. This restricts their applicability in remote or mobile environments where grid access may be unavailable or where battery power is preferred. Additionally, products that support direct current (DC) power typically do so through crude adapters and lack the necessary safety redundancies, filtering, and voltage regulation to operate reliably in unattended outdoor systems.

Another critical shortcoming is the absence of environmental hardening. Many commercially available heated pads are constructed with low-durability materials that degrade under extended exposure to water, snow, or ice. In environments such as Montana, where winter conditions can persist for months with temperatures dropping below −10 °F, these materials often fail, leading to loss of function or, in some cases, short circuit and safety hazards.

To address these deficiencies, a custom-designed autonomous heating system was developed for application in outdoor doghouses exposed to cold climates. The system introduces several innovations to improve efficiency, reliability, and responsiveness while ensuring safe operation in challenging conditions.

1.3.3 Dual-Sensor Feedback with Real-Time Control

The proposed system utilizes two analog temperature sensors (TMP36) configured to measure ambient air temperature and surface temperature of the heating pad, respectively. These sensors output a voltage linearly proportional to temperature at a scale of 10 mV/°C with a 500-mV offset at 0 °C. By employing a dual-sensor configuration, the system establishes a closed-loop feedback mechanism that allows for both condition monitoring and active control. The ambient sensor triggers the system to enter heating mode once the surrounding temperature drops below 40 °F, while the pad sensor provides a secondary layer of thermal protection, ensuring the surface does not exceed 115 °F. This implementation prevents thermal overshoot and ensures proportional heating behavior under dynamic environmental conditions.

1.3.4 Microcontroller-Based PWM Regulation

Core system logic is developed on an MSP430FR2310 microcontroller, which samples the analog output from both temperature sensors via its integrated 10-bit analog-to-digital converter (ADC). Control logic is implemented in firmware using conditional branches and scaling functions to determine the appropriate response. If the ambient temperature is within the defined operational window (0 °F to 40 °F), the microcontroller outputs a pulse-width modulation (PWM) signal on pin P1.2. This signal is used to modulate the gate of an AO3400A N-channel MOSFET, which acts as a low-side switch for the heating pad circuit.

The use of PWM allows the system to regulate power delivered to the heating pad by varying the duty cycle of the gate signal. This improves energy efficiency by avoiding full-power operation when lower heat levels are sufficient. The PWM method also reduces stress on the power system and extends the longevity of both the heating element and associated power electronics. The microcontroller operates on a 3.3 V rail and was selected for its ultra-low-power consumption, ensuring that overhead from the control logic does not significantly impact total system energy use.

1.3.5 Power Design and Protection

The heating system is powered from 12 V DC input, compatible with solar-charged battery banks or automotive supplies. A buck regulator (LM2594MX-3.3) is used to step

down the input voltage to 3.3 V for use by the microcontroller and sensor subsystems. This switching regulator provides high efficiency and stable output voltage with minimal heat generation. Output filtering includes a 150 μH inductor and 0.1 μF capacitor to suppress ripple and transient noise.

To ensure system protection and reliability, the design incorporates multiple electrical safeguards. A 4 A fuse is placed in series with the heating pad's power line to protect against overcurrent conditions that could arise due to short circuits or pad degradation. A 100 mA fuse protects the low-voltage control subsystem. Gate protection for the MOSFET is achieved using a 470 Ω resistor in series and a 10 kΩ pull-down resistor to prevent unintended switching during startup or idle states. These design elements align with standard electrical safety practices for embedded heating systems.

1.3.5 Operational Conditions

All selected components are rated for extended industrial temperature ranges (−40 °C to +125 °C). Signal and power traces on the PCB are designed to minimize EMI and voltage drop, and 18 AWG wire was used for all high-current paths to reduce resistive heating losses.

1.3.6 Applicable Standards

The heating system incorporates design elements aimed at ensuring compliance with UL 499, a standard for electrical heating appliances. UL 499 was chosen as it provides guidelines that cover safety, performance, and reliability. Adhering to these standards is essential for providing safety for any device intended for the usage of animals.[8]

Adhering to UL 499 means that the circuit design incorporates appropriate spacing between conductive elements such as the high voltage supply (12V) and the low voltage supply elements (3.3V). The design prevents electrical shorts that could lead to fires that could be dangerous to users. Components such as a metal-oxide-field-effect transistor (MOSFET) and temperature sensors (TMP36) have all been chosen due to their ability to withstand high currents and high voltages, thereby providing a large safety margin. The design utilizes two TMP36 temperature sensors to monitor both ambient and heat pad temperatures. This allows the system to adjust based on two different temperature sensors data, allowing for the system to ensure that the components do not get too hot for usage and maintain a comfortable temperature for any dog utilizing the heating system.

The heating system utilizes two fuses, one 4A fuse and one 100mA fuse. Both fuses protect their respective elements from any overcurrent. This protection allows the heating system to safely shut off if overcurrent occurs. 470Ω and 10kΩ resistors are specified above the maximum expected operating conditions. This ensures long-term reliability without component failure.

The system considers IP ratings for moisture and dust resistance, ensuring that critical components such as the microcontroller, heating elements, and power supply are adequately protected from environmental exposure. Given the outdoor application, a minimum rating of IP65 is recommended to prevent moisture and dust, which could compromise electrical functionality over time.
By adhering to these standards, the heating system will meet industry safety and performance regulations while ensuring the longevity and reliability of the system under real-world conditions.

2. Project Requirements

The primary objective of this project was to develop an autonomous heating system for doghouses, designed to ensure the comfort and safety of dogs during the cold seasons in Bozeman, Montana. This goal stemmed from a clear need identified by our sponsor, who highlighted the inadequacies of traditional doghouses in maintaining suitable temperatures during winter months. The system was required to autonomously regulate the internal temperature of a doghouse, keeping it within a specific temperature range to optimize comfort without manual intervention. Beyond merely providing warmth, the heating system was engineered to be energy-efficient, safe, and reliable under varying environmental conditions. This initiative promised to enhance the well-being of dogs by providing consistently warm shelter, thus improving their quality of life during extreme weather conditions.

2.1 Product Requirements Outline

Obj 1) System will improve comfort within the doghouse based on external temperature conditions.

- Req 1.1) System will autonomously heat the doghouse when temperatures are too cold.
  - Spec 1.1.1) System will heat while the temperature in the doghouse is measured to be between 0 °F and 40 °F with a 2 °F tolerance.
  - Spec 1.1.2) System will begin heating within 1 minute of the doghouse temperature measuring between 0 °F and 40 °F.
  - Spec 1.1.3) System will stop heating within 1 minute of the doghouse temperature exceeding 40 °F with a 2 °F tolerance.
- Req 1.2) System will monitor the temperature of doghouse
  - Spec 1.2.1) Components will remain undamaged when temperatures range from –10 °F to 120 °F.
  - Spec 1.2.2) Temperature will be measured within 2 °F of the actual measured temperature.

2.2 Design Constraints

1. All pets will be protected from any electrical or mechanical hazards.
2. System will be installed in this doghouse https://www.amazon.com/YITAHOME-Insulated-Doghouse-Resistant-Assembly/dp/B0BL2ZWG11.
3. The system will consume no more than 50 Watts per hour. *An original constraint before the group split up was to be power efficient. This constraint makes sure that the heating system remains efficient.

2.3 Additional Project Requirements or Deliverables

No additional level two requirements were introduced beyond the core system requirements outlined in section 2.1. The scope of the project remained consistent throughout development, focusing on the implementation of a functional and autonomous heating system.

2.4 Team Member and Project Responsibilities [AI]

The project tasks for the autonomous heating system for doghouses were entirely undertaken by Lucas Harting due to a reorganization of the team structure from the initial project conception. This transition to a single-member team necessitated a comprehensive approach, where Lucas was responsible for all aspects of the project, encompassing the ideation, design, implementation, and verification stages.

Lucas Harting was responsible for the complete system design, which included selecting appropriate components such as the MSP430 microcontroller, TMP36 temperature sensor, and heating elements. He also developed the circuit and wrote the embedded software to control the heating mechanism based on temperature readings. The design process involved creating a schematic diagram, selecting energy-efficient and safe components to meet the project's requirements, and ensuring the system's operational effectiveness in varying temperatures.

In addition to designing the system, Lucas also took on the role of testing and verifying the functionality and reliability of the heating system. This involved setting test conditions that mimicked the harsh winter environment of Bozeman. He conducted a series of tests to ensure the system operated within the defined temperature ranges and

responded correctly to temperature fluctuations. The testing process also included safety verifications to ensure that the system did not pose any hazards under normal and fault conditions.

3. Subsystem Design and Verification

This design consists of a modular, autonomous heating system intended to maintain a comfortable environment based on external temperature conditions. The system is divided into three subsystems: temperature monitoring, control logic, and power-regulated heating output. Each of these systems is integrated into a printed circuit board (PCB) to ensure durability and stability. The block diagram shown below in Figure 3.1 titled Heating System Block Diagram, reflects updates since the critical design review (CDR). The diagram shown below in Fig. 1 presents the conceptual layout of the system.

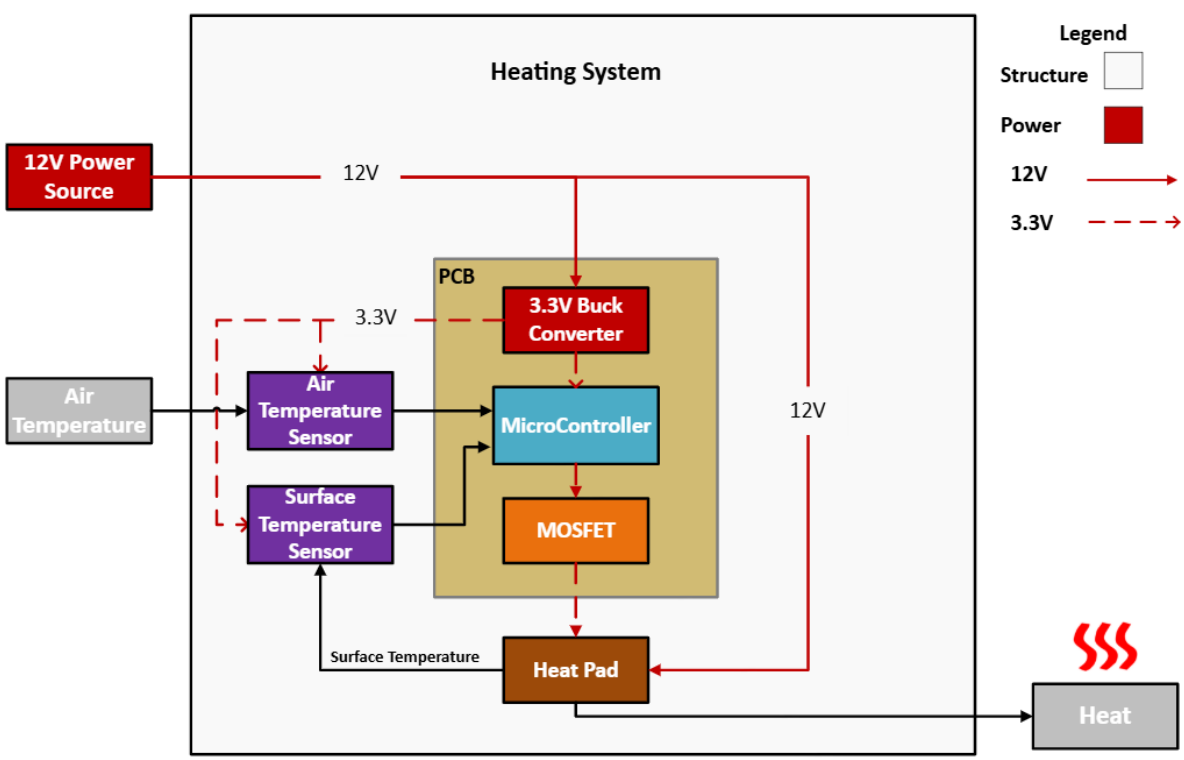

Figure 3.1 Heating System Block Diagram

3.1 Subsystem 1: Temperature Sensing and Monitoring [Lucas Harting]

The "Temperature sensing and Monitoring" subsystem is responsible for collecting temperature data and using this data to influence the behavior of the heating system. This includes 2 temperature sensors, an ambient air temperature sensor and a surface temperature sensor that actively monitors the temperature of the heating pad ensuring

it does not get too hot for use. The two temperature sensors are powered with 3.3V stemming from a buck converter connected to a 12V power source.

3.2 Temperature Sensing

The temperature sensing subsystem provides the real-time temperature data necessary for the decisions of the control subsystem. The design required two separate measurements: An ambient internal temperature of the doghouse and the surface temperature of the heating pad. These readings are used to verify whether the interior of the doghouse is within the comfort range and whether the heating pad is operating at a comfortable and safe temperature.

To meet these needs, the TMP36 analog temperature sensor was selected. The diagram, shown below labeled Figure 3.2 TMP36 Pinout, was chosen for several reasons. It offers a simple analog interface,
It has an operating temperature range of -40°C to 125°C, suitable for the cold winters of Bozeman, Mt. It is also low-cost and has low quiescent current (<50 μA), which aligns with the power constraint of ≤50W.

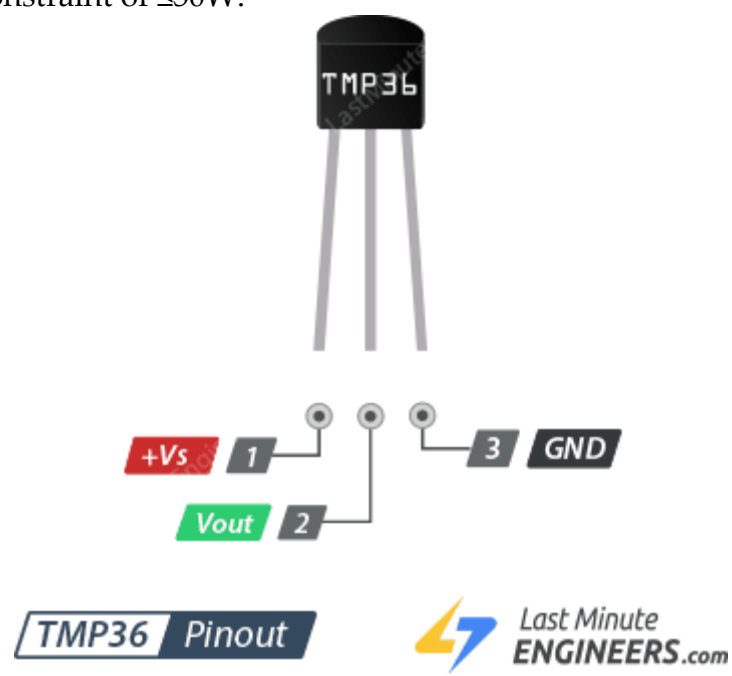

Figure 3.2 TMP36 Pinout

Each TMP36 temperature sensor outputs a voltage proportional to the ambient temperature, at a scale of 10 mV/°C, with a 500 mV offset at 0°C. The analog output is read by the 10-bit ADC module built into a microcontroller. The conversion process involves measuring the voltage at each sensor and converting it into a digital value,

which is then processed via a conversion function that compensates for the offset and returns the temperature in °F. To ensure signal integrity and accurate ADC readings, a 0.1 μF ceramic capacitor is placed between the V_IN (Pin 1) and GND (Pin 3) of each TMP36. This capacitor acts as a decoupling filter, suppressing high-frequency noise from the power supply and stabilizing the operating voltage.

Both sensors are powered from the 3.3V power output generated by a buck converter (LM2594). The heat pad temperature sensor is connected via 18-gauge wire routed to the PCBs sensor terminal while the ambient air temperature sensor is soldered directly on the PCB itself. The heating pad draws up to 3.2A and 18 AWG wire offers a safe current rating of approximately 5A, providing ample margin.

3.3 Temperature Sensing and Monitoring Fabrication and Verification

Initial sensor circuits were built on a breadboard and verified independently before integration. The system was subjected to a range of environmental temperatures from -4°F to 120°F using a freezer setup to measure the lower bound and upper bound of the temperature spectrum respectively. By placing the system within the freezer one is able to achieve lower temperatures than in a traditional indoor environment. The freezer was set to approximately 0°F. By placing the system within different locations of the freezer different temperatures were achievable. For higher temperatures but still those below 40°F, the system was placed in a refrigerator to simulate colder temperatures but not freezing temperatures. Sensor readings were compared against an external IR thermometer to evaluate accuracy.

Verification Test: Spec 1.2.2

- Purpose: Confirm that TMP36 sensors measure temperature within ±2°F of a calibrated IR thermometer. The temperature sensor in question made by Ames Instruments is calibrated to be accurate within 2°F of actual temperature.
- Equipment: TMP36, IR Thermometer, MSP430, 3.3V power supply.
- Conditions: 5 trials ranging from -4°F to 120°F.

Trial	TMP36 (Ambient)	IR (Ambient)	TMP36 (Pad)	IR (Pad)	Result
1	62.6 °F	63.2°F	64.4°F	63.5°F	PASS
2	30.2°F	29.5°F	32.0°F	31.1°F	PASS
3	55.4°F	55.9°F	4.2°F	4.9°F	PASS
4	120.6°F	121.3°F	57.2°F	57.7°F	PASS
5	-4°F	-3.3°F	109.4°F	109.9°F	PASS

Figure 3.3 Spec 1.2.2 Data

This verification test of spec 1.2.2 proved that the TMP36 was a good choice for the design. Across all five trials both the TMP36 temperature sensors and the external IR temperature sensor remained well within the 2 °F tolerance. With the maximum observed error being 0.7 °F, this validates both the accuracy and calibration of the sensors. This confirmed that the sensing subsystem meets specification 1.2.2 and can reliably serve as the basis for temperature related control decisions.

3.4 Control Logic and Decision-Making [Lucas Harting]

The control logic subsystem is the core of the system, shown below in Figure 3.4. It interprets the analog temperature signals and compares those signals to the predefined threshold. This logic is implemented in firmware on the MSP430FR2310 microcontroller and consists of analog to digital conversion, conditional temperature checks, and pulse width modulation (PWM) output.

The firmware begins with initialization, setting digital and analog input/output pins, configuring the ADC module, and defining system thresholds. The ambient temperature sensor, configured to P1.1, the heat pad temperature sensor configured to P1.2, and the PWM output to heating pad via a field-effect transistor (MOSFET) is configured to P1.3. Shown below is figure 2 highlighting the control logic of the system. A threshold of 0°F to 40°F defines the system operational range. Below 0°F the system will remain off. Above 40°F the system will also remain off. When the temperature is measured to be between 0°F and 40°F the system will turn on using PWM to adjust the

temperature of the heat pad ensuring an efficient and safe operation. A stabilization delay of 1 second is introduced to allow thermal changes and avoid excessive switching.

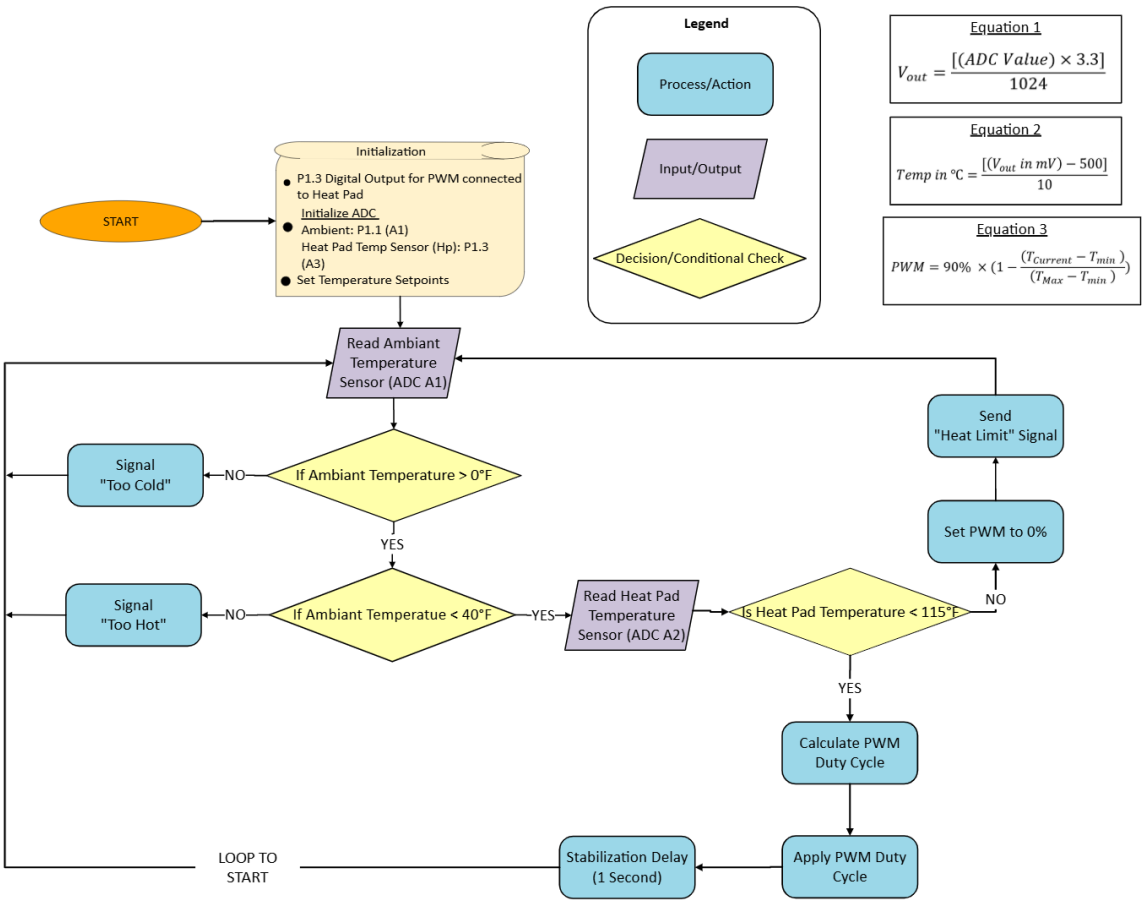

Figure 3.4. Design Logic

The heating intensity is adjusted using a proportional PWM output depending on the ambient temperature. This is shown above in equation 3 where T current is the current ambient temperature, Tmin is the activation threshold (0°F) and Tmax is the deactivation threshold (40°F).

3.5 Control Logic and Decision-Making Verification

The control logic subsystem was verified through experimental testing. The purpose of this verification was to ensure that the MSP430 microcontroller correctly interprets temperature inputs and triggers heating activation and deactivation within system specifications. Verifying spec 1.1.2 – Heating activation within 1 minute of the system measuring within activation range. The ambient temperature sensor was placed in a

variety of environments measuring within and outside of activation range. A temperature of around 40°F was acquired by simply opening a household door while it was cold outside. Colder temperatures were met utilizing a household freezer. An LED would turn on when the system was sending power to the MOSFET indicating that the heating pad would be operational. A timer was utilized to measure the time between when the system would measure within activation bounds and when the LED light would turn on. The system passed this spec with no outliers. The data shown below represents the results of the trial.

Trials	Temperature of activation	Time of activation after temperature reaches 0°F to 40°F
Trial 1	39.2 °F	10-12 seconds
Trial 2	39.2 °F	1-3 seconds
Trial 3	37.4 °F	15-17 seconds
Trial 4	39.2 °F	5-7 seconds
Trial 5	41°F	NA
Trial 6	1.4°F	8-10 seconds
Trial 7	-0.4°F	10-12 seconds
Trail 8	1.4 °F	1-3 seconds
Trial 9	3.2 °F	8-10 seconds
Trial 10	1.4 °F	5-7 seconds

Figure 3.4. Spec 1.1.2 Data

In all trials, the heating was initiated well under the 60-second requirement. The non-activation case's occurred when the ambient temperature was outside the heating range (41.0°F), demonstrating correct logical boundaries. This verifies compliance with spec 1.1.2.

Spec 1.1.3: Heating deactivates within 1 minute when ambient temperature exceeds 40°F. The objective of this test was to confirm that the system operates as intended. To measure the upper bounds the system was simply placed in a room temperature house (around 67°F). Similar to 1.1.2, the timer will start when the temperature measured by the system exceeds 40°F. The timer will then stop when the LED turns off signaling that power has been cut off and that the PWM is set to 0%. The results of the trial are shown below.

	Ending Temp (°F)	Time of de-activation after temperature exceeds 40°F.
Trial 1	42.8 °F	33-35 seconds
Trial 2	41 °F	5-7 seconds
Trial 3	44.6 °F	23-25 seconds
Trial 4	41 °F	10-12 seconds
Trial 5	41 °F	18-20 seconds

Figure 3.5. Spec 1.1.3 Data

The results concluded that the system consistently deactivated heating well within 60 seconds of exceeding the specified temperature range. In all trails, the microcontroller reliably transitioned the PWM signal to 0% meeting Spec 1.1.3.

3.6 Heating Output and Power Regulation [Lucas Harting]

The heating output of the system is responsible for delivering heat to the doghouse interior via a heating pad. A heating pad was chosen for this application due to its low current draw, broad thermal range, and compatibility within the doghouse. Power to the heating pad is switched using a MOSFET (A03400A) which acts as an electronic switch controlled via a PWM signal from the MSP430. When the microcontroller sets the MOSFET gate high, current will flow from the 12V power supply through the heating pad to the ground enabling heat. The PWM signal allows for heat output control based on both the ambient air temperature and the surface temperature of the heating pad.

A fuse is included in-line with the 12V power source to protect the system in the event of a short circuit or overcurrent condition. This 4A fuse provides adequate protection while supporting the power demands of the heating pad. Both the heating pad and the power source are connected via MOLEX 2 pin plugs. This allows the user to unplug the power source and heat pad at will if their needs demand this. This also allows the system to be more maneuverable. Both the heating pad and power source are connected via 18 AWG wire allowing for current draw without the wire being too cumbersome and remaining cost effective.

3.6.1 Heating Output Fabrication and Verification

Shown below in Fig 3.6. Heating System Circuit Schematic, the heating output was evaluated in conjunction with the control logic. Initial bench testing verified that the MOSFET fully turned on (saturation mode) when a signal was applied and fully blocked current when the gate was low. A multimeter was used to confirm voltage levels at the gate, drain, and source under different operating conditions. The pad was also tested separately, ensuring that when plugged into a 12V power source the heating pad turns on reliably. This was confirmed true by utilizing an external IR temperature sensor to monitor the warmup of the pad. Req 1.1: System will autonomously heat the doghouse when temperatures are too cold, confirms that the system operates as expected with the following results. The system with the heating pad was placed in an environment within its activation range and the temperature of the heating pad was monitored to ensure that it turned on and functioned as expected.

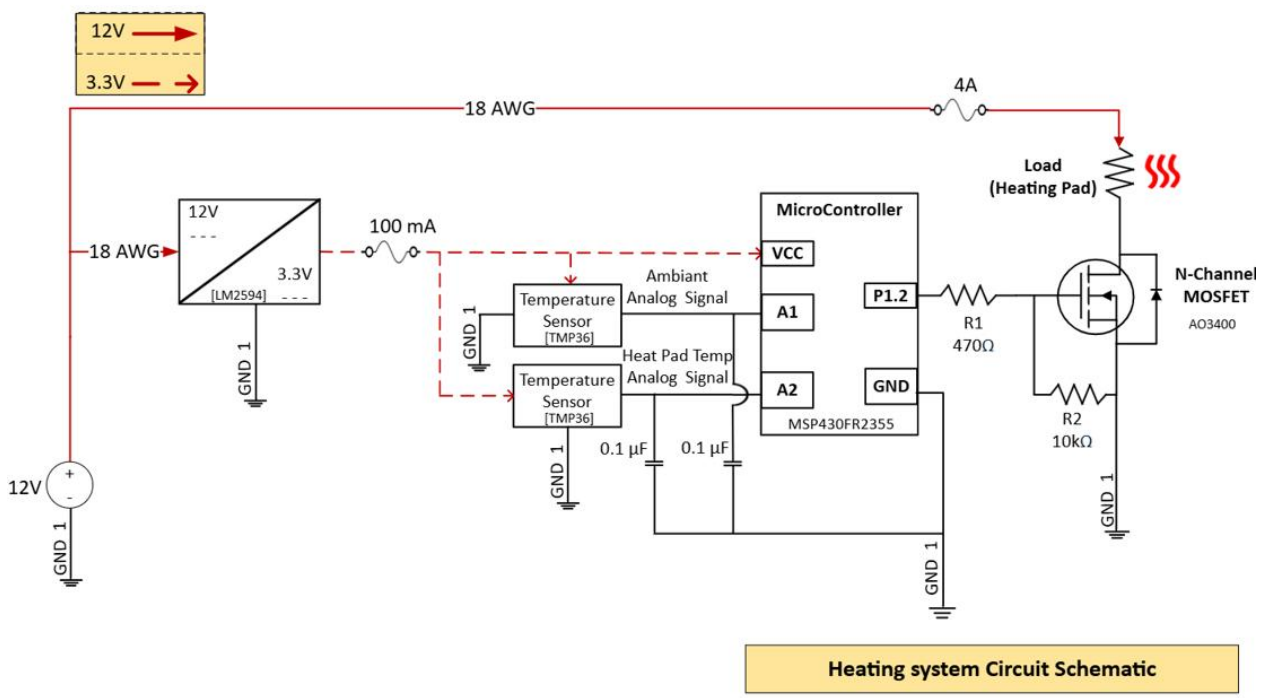

Figure 3.6. Heating System Circuit Schematic

	Ambient Temp of Activation (°F)	Starting heatpad Temp (°F)	Ending heatpad Temp (°F)
Trial 1	1.4°F	63.3°F	78.6°F
Trial 2	4.4°F	65.4°F	82.2°F
Trial 3	1.4°F	13°F	53.2°F
Trial 4	3.2°F	65.0°F	86.6°F
Trial 5	21.2°F	66.7°F	102.0°F
Trail 6	32.0°F	33.8°F	96.7°F
Trial 7	33.7°F	42.0°F	78.3°F
Trial 8	37.4°F	33.2°F	84.5°F
Trial 9	39.2°F	36.7°F	108.6°F

Figure 3.7. Req 1.1 Data

The following results indicate that when the system was within operational range of 0°F to 40°F the heating pad temperature increased, indicating that the heating pad was functioning as expected via the rest of the system. The heating output subsystem reliably and safely delivered variable heat in response to system control.

4. System Fabrication and Verification

The final stage of the project focused on fabricating the fully integrated heating system and validating its performance under realistic operating conditions. This chapter provides a comprehensive evaluation of the completed system's ability to meet Objective 1. "System will improve comfort within the doghouse based on external temperature conditions" along with all underlying specifications and requirements.

As the subsystems were fabricated, verified, and fully tested in isolation, they were integrated into the complete autonomous heating system. This finalized system was capable of sensing temperature, and making decisions based on thresholds, and regulating heating output. This block diagram outlines how the temperature sensors gather analog environmental data and feed it into the MSP430FR2310 microcontroller, which uses embedded control logic to interpret the values and issue a PWM signal to control an N-channel MOSFET. This MOSFET acts as a gate for current flowing from the 12V supply to the heating pad. A buck converter steps down the voltage to 3.3V for the microcontroller and sensors, maintaining efficient power distribution.

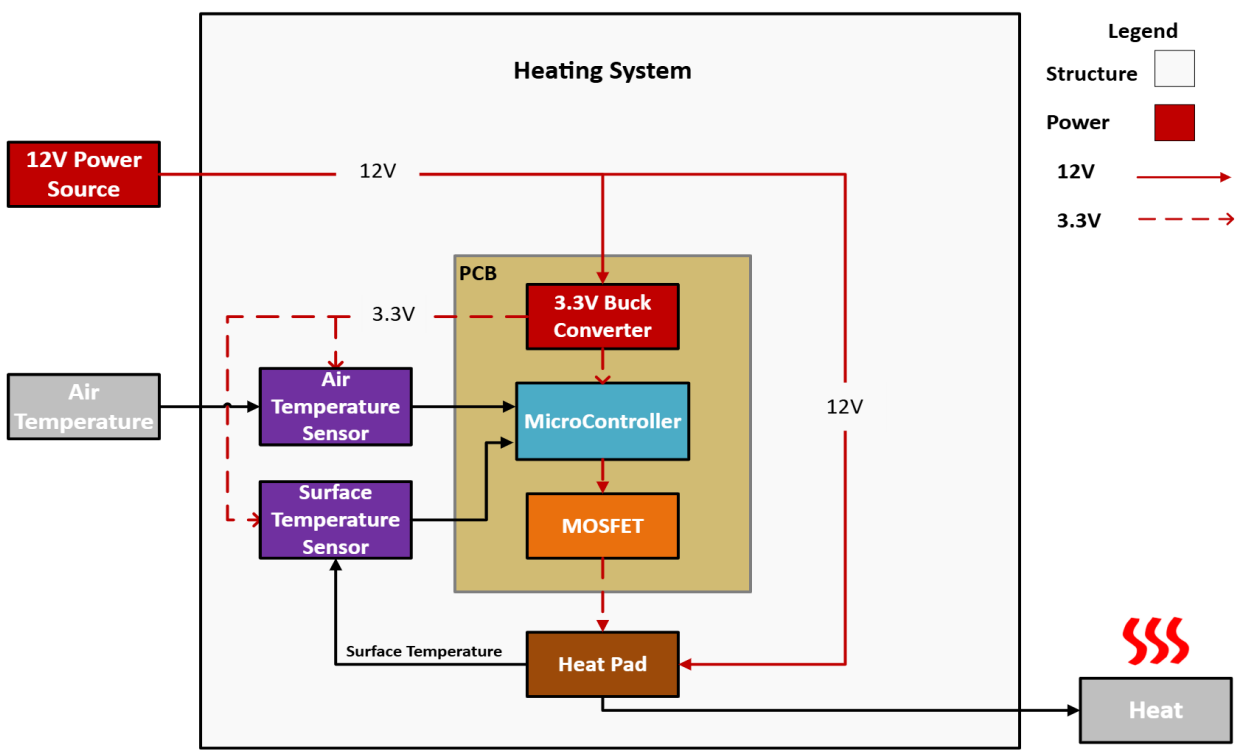

Figure 4.1. Final Conceptual Block Diagram

4.1. System Design

Analysis of this system can be further explained through figure 4.2, the circuit diagram detailing the final system. The heating subsystem circuit is designed to regulate a low-voltage heating pad using real-time temperature feedback from two analog sensors, all powered by a single 12V DC input. At the core of the power distribution network is a buck converter, which steps the 12V supply down to 3.3V to power the MSP430FR2310 microcontroller and the two TMP36 temperature sensors. The LM2594 also includes a 150 μH inductor and a 0.1 μF capacitor on the output for voltage stability and noise suppression. The 3.3V rail ensures safe and reliable operation of the logic circuitry and analog signal conditioning. Following the completion of individual subsystem verification, the full system was fabricated by soldering all active and passive components onto a two-layer PCB designed in Altium Designer. The board incorporated three major functional blocks: (1) temperature sensing, (2) embedded control and PWM generation, and (3) heating output with power regulation.

Temperature data is collected through two TMP36 sensors, one placed to measure ambient air temperature and the other to monitor the heating pad surface. These analog sensors output voltage signals proportional to the measured temperature, which are fed into the microcontroller's ADC channels (A1 and A0). Each sensor is paired with a 0.1 μF decoupling capacitor to minimize electrical noise and ensure accurate readings. The MSP430FR2310 microcontroller processes this data and determines whether heating is required based on programmed logic conditions. If the system detects that heating is necessary, it sets the digital output pin P1.2 to a high logic level, which in turn activates an N-channel MOSFET (AO3400A). This MOSFET serves as a switch, allowing the 12V supply to power the heating pad when its gate is driven high. A 470Ω resistor (R1) is placed in series with the gate to limit the inrush current and protect the microcontroller from damage due to capacitive loading. Additionally, a 10kΩ pull-down resistor (R2) is connected between the gate and ground to ensure the MOSFET reliably turns off when P1.2 is not actively driven high.

To handle the load required by the heating pad, all high-current connections are routed using 18 AWG wire, which provides sufficient current-carrying capacity with minimal voltage drop. A single ground reference, labeled GND_1, is shared across all components—including sensors, logic circuitry, and power elements—to maintain signal integrity and consistent voltage levels throughout the system. This carefully coordinated design enables reliable, safe, and efficient temperature-based control of the heating element within the doghouse environment.

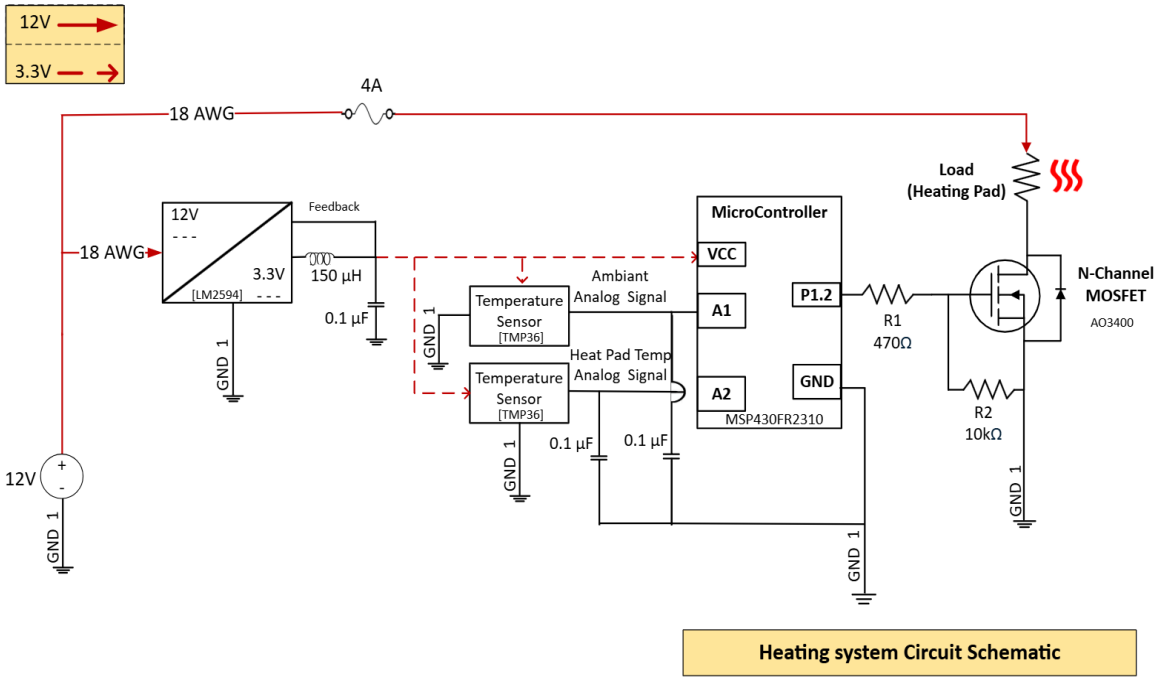

Figure 4.2. Heating System Circuit Schematic

4.2. System Control Logic

Figure 4.3, shown below, illustrates the logic embedded within the MSP430FR2310. The control logic for the doghouse heating system is governed by a structured decision-making loop implemented on the MSP430FR2310 microcontroller. Upon initialization, the microcontroller configures its P1.2 pin as a digital output for Pulse Width Modulation (PWM), enabling it to regulate power delivery to the heating pad via an N-channel MOSFET. Analog-to-digital conversion (ADC) is initialized for two TMP36 temperature sensors: one measuring ambient air temperature connected to pin P1.0 (A0), and the other monitoring the heating pad's surface temperature connected to pin P1.1 (A1). The system defines critical temperature thresholds to guide operations specifically, an ambient lower limit of 0°F, an upper activation threshold of 40°F, and a maximum allowable pad temperature of 115°F to prevent overheating.

During each loop cycle, the microcontroller first reads the ambient temperature using the TMP36 sensor and evaluates whether the current environment warrants heating. If the ambient temperature is below 0°F, the system flags the condition as "Too Cold" and restarts the loop without engaging the heating pad. Conversely, if the temperature exceeds 40°F, it signals "Too Hot" and similarly refrains from heating. If the ambient temperature is within the 0°F to 40°F range, the system proceeds to read the temperature of the heating pad. If the pad is already at or above 115°F, the microcontroller sets the PWM duty cycle to 0%, effectively disabling the heating output

and triggering a “Heat Limit” warning to prevent overheating. However, if the heating pad is below 115°F, the system calculates a PWM duty cycle based on a linear scaling equation, ensuring the pad gradually approaches the target temperature without overshooting.

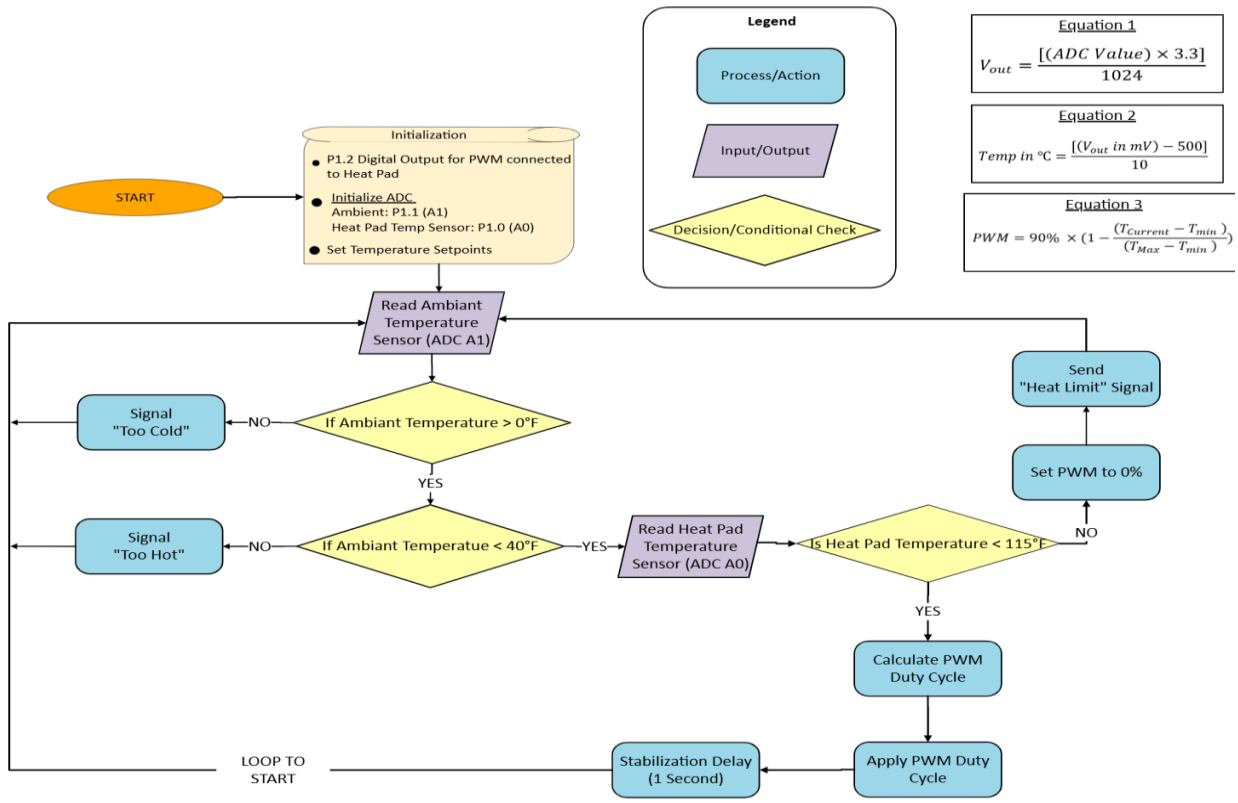

Figure 4.3 Control Logic

4.3 System Integration

System integration required careful planning of both signal and power paths. The temperature sensing subsystem, consisting of two TMP36 temperature sensors, was mounted on the PCB and routed to their target locations inside the doghouse using shielded 18-gauge wire to reduce noise pickup. The ambient TMP36 sensor was soldered directly to the PCB. The PWM TMP36 temperature sensor was placed against the heat pad with adhesive and routed to the PCB with 18-gauge wire. Their outputs were routed to ADC inputs on the MSP430 (P1.1 for ambient, P1.0 for pad).

The control logic subsystem was implemented through firmware running on the MSP430FR2310. Once the analog inputs were acquired and converted, the control logic computed whether the ambient temperature fell within the heating threshold range. The logic then calculated the proper PWM duty cycle and wrote it to the Timer_A

module, which modulated the voltage to P1.2 connected to the MOSFET gate. This logic was verified with test voltages before integrating with the hardware.

For heating output, the low-side MOSFET was installed on the PCB to ensure thermal stability. It was connected between the heating pad and ground, with the pad's positive lead tied directly to the 12V input.
The power regulation subsystem used an LM2594 buck converter, configured using a voltage divider to output 3.3V. The output rail supplied the MSP430, TMP36 sensors, and supporting passive components. To prevent damage, a 4A fuse was installed inline on the 12V rail prior to the heating element. Capacitors were distributed throughout the board to reduce electrical noise.
After individual verification of each component and functional block, the entire PCB was tested.

4.5 System Verification

Objective 1 is composed of 5 specifications and 2 requirements. Each specification and requirement were tested thoroughly to ensure that the systems comply with each. After assembling the system shown below, specification 1.2.2 was the first specification tested. Specification 1.2.2, stating "temperature will be measured within 2 degrees Fahrenheit of actual measured temperature" was relatively simple to measure. The test contained both the ambient and heat pad temperature sensors. A probe with one lead connected at the Vout pin of the TMP36 temperature sensor will be measured in reference to ground. The test contained 5 trials measured over a range of temperatures from subzero to around 110 degrees F. Repeating this test with the complete system ensures that the system was not affected by assembling the complete system. By testing each temperature sensor against the data of the IR sensor one is able to verify that the temperature readings of the TMP36's are accurate. The following diagram of the TMP 36 temperature sensor has been provided for reference. In each of the 5 repeated trials, the temperature sensors measured within 2 degrees Fahrenheit of each other.

4.6 Specification 1.1.2. Verification

Specification 1.1.2 and 1.1.3 were tested next stating "system will begin heating within 1 minute of the doghouse temperature measuring between 0 degrees and 40 degrees Fahrenheit with a 2-degree tolerance" and "system will stop heating within 1 minute of the doghouse temperature exceeding 40 degrees Fahrenheit with a 2 degree tolerance" respectively. Specification 1.1.2 requires that the heating system not only activates within the correct temperature range but does so within one minute of crossing the threshold. This specification ensures timely response to environmental changes, particularly in cases where the temperature drops quickly.

The one-minute response requirement was derived from consideration of rapid temperature changes that an outdoor environment can face.
To validate this spec, eight trials were conducted using a freezer, outdoor environment, indoor air in conjunction with a refrigerator. The system was pre-cooled in a freezer to simulate below-threshold temperatures. A multimeter was used to measure the temperature of the ambient air temperature sensor. By placing the system within the activation threshold, the multimeter would be monitored to see exactly when the tmp36 temperature sensor first measured a temperature within activation range. Immediately a timer would be started with the multimeter quickly being placed on P1.2 of the microcontroller. When an output voltage was measured at P1.2 the timer would be stopped as this signaled that power was being sent to the heating pad producing heat. Across all eight trials, activation times ranged from 5 to 25 seconds. The delay was influenced by how quickly the temperature transitioned and stabilized within the operational range. Importantly, no trial approached the 60-second limit, and several trials saw activation within 10 seconds. This performance confirms that the ADC conversion, temperature comparison logic, and MOSFET triggering operate without latency or interrupt-driven delays.

Analyzing this from a system-level view, fast activation has two major implications. First, it validates the microcontroller's ability to respond in near-real time to environmental inputs without hanging or buffering delays. Second, it demonstrates that the heating hardware is ready and energized as soon as logical conditions are met. This reliability supports the safety and comfort features of the design, especially in northern climates or for at-risk animals in low temperatures.

The results of this test strongly affirm that the feedback loop between sensing and control is robust, with no unnecessary delay or software-induced debounce errors. Additionally, this test helps validate the power-up and wake-from-sleep behavior of the microcontroller. The system proved capable of initializing and activating heating rapidly after detecting a valid condition, a key feature for real-world deployments in environments with fluctuating temperatures.

	Temperature of activation	Time of activation after temperature reaches 0 °F -40 °F±2 °F
Trial 1	37.4 °F	15-17 seconds
Trial 2	35.6 °F	18-20 seconds
Trial 3	39.2 °F	15-17 seconds
Trial 4	39.2 °F	5-7 seconds
Trial 5	41°F	0 seconds
Trial 6	33.8°F	15-17 seconds
Trial 7	10.4°F	23-25 seconds
Trial 8	5.0°F	8-10 seconds

Figure 4.5. Spec 1.1.2 Data

4.7. Spec 1.1.3. Verification

While activating the heating system within cold temperature ranges is essential, equally important is ensuring that the system deactivates as temperatures rise above the 40°F threshold. Specification 1.1.3 defines this requirement, stating that the system must turn off the heating pad within one minute of detecting an ambient temperature above 40°F ± 2°F. This ensures the doghouse does not overheat and conserves energy during transitional weather conditions.

To test this behavior, five trials were conducted. The system was initially stabilized within the operational temperature range (typically 30°F to 35°F), triggering the heating pad to activate. Once the system remained on for several minutes, it was then exposed to a controlled warm environment—typically an indoor space and a stopwatch was started once the TMP36 sensor reading crossed the 42°F threshold. As in the activation tests, a multimeter monitored the logic level of P1.2 to detect MOSFET deactivation.

All five trials showed consistent deactivation of the heating pad within 35 seconds after exceeding the temperature threshold. This indicates that the microcontroller's logic correctly responds to changing inputs and ceases heating when conditions no longer require thermal output. At the system level, this is critical to prevent overheating of the internal enclosure and confirms that the system's logic is reversible and dynamic, not reliant on hardcoded latch behavior or long decay times.

The implications of this result are significant. Firstly, it verifies that the control algorithm and temperature sensing mechanism not only trigger under correct conditions but also respond appropriately to the reverse condition. This reflects the closed-loop nature of the system, which continuously evaluates the environment to adapt its behavior. Secondly, by deactivating quickly, the system avoids unnecessary power consumption. In short, Specification 1.1.3 confirms that the heating subsystem exhibits proper termination behavior. Results demonstrate that the heating system remains not only functional but responsible in managing thermal delivery to the doghouse environment.

	Ending Temp (°F)	Time of de-activation after temperature exceeds 40°F.
Trial 1	41 °F	8-10 seconds
Trial 2	42.8 °F	21-23 seconds
Trial 3	42.6 °F	15-17 seconds
Trial 4	41 °F	33-35 seconds
Trial 5	41 °F	18-20 seconds

Figure 4.6. Spec 1.1.3 Data

4.8. Specification 1.1.1. Verification

The next specification tested was specification 1.1.1 stating "system will heat while the temperature in the doghouse is measured to be between 0 degrees and 40 degrees Fahrenheit with a 2-degree tolerance." Specification 1.1.1 ensures that the system activates the heating pad only when the ambient temperature is within the 0°F to 40°F operational range, allowing a tolerance of ±2°F. This specification was essential for validating the system's logic to prevent unnecessary heating in mild or warm conditions and to ensure activation in cold environments.

To verify this specification, twelve trials were conducted under a wide range of environmental conditions. Testing was performed in three temperature brackets: sub-freezing temperatures (ranging from -4°F to 5°F using a freezer), mid-range cold temperatures (10°F to 35°F using refrigerator exposure), and near-threshold conditions (37°F to 45°F using controlled indoor environments).

During each trial, the system was powered on and left to stabilize for three to five minutes. The MSP430 microcontroller continuously monitored the ambient temperature via ADC input. When the sensed temperature was within range, pin P1.2 was expected

to output a digital HIGH (3.3V), activating the MOSFET and thereby the heating pad. Voltage at P1.2 was monitored using a multimeter.
The recorded results indicated that in all twelve trials, the system activated the heater when the ambient temperature was within the expected bounds and deactivated it when outside the range. The controller consistently activated the heater below 40°F and deactivated it above 42°F, demonstrating correct implementation of the ±2°F tolerance range.

From a system-level perspective, this result confirms that the heating control logic and its interface with the temperature sensing circuit are functioning correctly. The ability to accurately switch heating states based on real environmental conditions ensures the doghouse will neither overheat in borderline conditions nor fail to activate when it's cold. Moreover, the successful boundary response confirms the analog-to-digital conversion and software filtering applied to temperature inputs are tuned well.

This test is also important in validating the logic of the embedded firmware. If the heating pad were to activate outside the specified range, the system could waste power or potentially make the internal environment uncomfortable. Conversely, failure to activate within range would compromise the primary objective of thermal comfort. The results show that the system balances these priorities effectively, behaving as designed and achieving the first critical step toward system-wide objective verification.

	Temperature of Environment °F (TMP36)	System ON/OFF	Pass Spec? YES/NO
Trial 1	53.6°F	OFF	YES
Trial 2	62.6 °F	OFF	YES
Trial 3	46.4°F	OFF	YES
Trial 4	37.4°F	ON	YES
Trial 5	28.4°F	ON	YES
Trial 6	28.4°F	ON	YES
Trial 7	21.2°F	ON	YES
Trial 8	10.4°F	ON	YES
Trial 9	6.8°F	ON	YES
Trial 10	-0.4°F	ON	YES
Trial 11	-4.0°F	OFF	YES
Trial 12	6.8°F	ON	YES

Figure 4.7. Spec 1.1.1 Data

4 .9. Requirement 1.1. Verification

Requirement 1.1 stating "System will autonomously heat the doghouse when temperatures are too cold" extends beyond isolated component behaviors and shifts focus on validating system-wide performance in cold-environment scenarios. This requirement ensures that the entire heating system—from sensor input to logic control, to actuation—functions autonomously when placed in an operational setting, such as an outdoor doghouse in winter. To validate this, the integrated system was tested across a range of environmental conditions to confirm that it could detect cold temperatures and engage the heating pad without manual input or intervention.

A total of nine trials were conducted for this test. The test environments ranged from extremely low ambient temperatures (down to 3.2°F) to borderline operational temperatures (near 39°F), and up to non-activation conditions (64.4°F and 66.2°F). The system was powered using a 12V DC source and monitored over a period of time using both a serial interface (to confirm logic state and temperature readings) and an external infrared thermometer (to confirm pad temperature behavior). Each trial measured three values: the ambient temperature at the time of activation, the initial heating pad temperature, and the final heating pad temperature recorded after 5–10 minutes of operation.

The results showed consistent heating behavior in every trial conducted under activation conditions. For instance, in Trial 1, the ambient temperature was 5.0°F, and the pad increased from 67.6°F to 112.9°F. In Trial 7, the ambient was 39.2°F and the pad still increased from 63.0°F to 117.3°F. Importantly, the system remained inactive during the high-temperature trials, such as Trial 8 (66.2°F to 67.0°F) and Trial 9 (64.4°F to 64.3°F), confirming correct deactivation logic.

From a system-level perspective, these results are significant because they demonstrate that the individual specifications—temperature detection, logic interpretation, and MOSFET actuation—are correctly coordinated. There were no observed misfires or logic errors during the test period. This means the MSP430 microcontroller reliably received sensor data, computed appropriate thresholds, and executed control signals consistently across the entire test range.

Furthermore, this test validates the system's readiness for unattended deployment. In a real-world scenario, the heating system would not be monitored or adjusted daily, so it must detect cold automatically and respond appropriately. The consistency and correctness of these trials suggest a high level of reliability, with the thermal behavior of the pad aligning well with environmental demands. The data confirms that the doghouse heating system performs its primary purpose: to autonomously deliver comfort in cold conditions.

	Ambient Temp of Activation (°F)	Starting Heatpad Temp (°F)	Ending Heatpad Temp(°F)
Trial 1	5°F	67.6°F	112.9°F
Trial 2	3.2°F	68.0°F	109.6°F
Trial 3	8.6°F	64.3°F	116.4°F
Trial 4	3.2°F	65.9°F	112.0°F
Trial 5	28.4°F	62.2°F	114.1°F
Trail 6	23.0°F	64.0°F	112°F
Trial 7	39.2°F	63.0°F	117.3°F
Trial 8	66.2°F	67.0°F	68.1°F
Trial 9	64.4°F	64.3°F	62.0°F

Figure 4.8. Requirement 1.1 Data

4.10. Requirement 1.2. Verification

While heating behavior is the primary function of the system, continuous temperature monitoring is a foundational support requirement. Requirement 1.2. stating "System Will Continuously Monitor the Temperature of the Doghouse" validates that the system is capable of consistently tracking ambient temperatures over time, ensuring that it remains aware of environmental shifts and capable of making informed control decisions. This requirement ensures that the system behaves predictably and responsively, especially in scenarios with gradually shifting thermal profiles.

To evaluate this requirement, four distinct trials were conducted, each within a unique temperature bracket to simulate the range of doghouse environmental conditions: above threshold (66.2°F), within threshold (28.4°F and 37.4°F), and near freezing (6.8°F). The system was placed in each of these environments for a 15-minute period, during which sensor readings were recorded every three minutes using a multimeter.

The results demonstrated reliable and stable data reporting across all trials. At each time interval, the system correctly reported increasing or decreasing trends in response to environmental changes. For example, in Trial 4 (6.8°F start), the sensor data captured a warming trend as the pad activated, showing values such as 6.8°F, 12.2°F, 8.6°F, and 15.8°F in successive samples. This confirmed that the sensors could continuously update readings and reflect actual changes in system temperature.

At the system level, this capability is essential to enable responsive feedback loops. Without continuous monitoring, the PWM logic or on/off thresholds could not be reliably triggered. Importantly, this test also verified system stability across extended operation, ruling out issues like signal drift, microcontroller hangs, or communication dropouts. This test also highlighted the temporal accuracy of the ADC sampling routine and showed that the firmware implementation on the MSP430 correctly manages periodic measurement tasks. Consequently, the system met and exceeded expectations for long-term environmental tracking, which is key for maintaining animal comfort and safety in an autonomous deployment.

	System measured Temperature (°F) **Trial 1**	System measured Temperature (°F) **Trial 2**	System measured Temperature (°F) **Trial 3**	System measured Temperature (°F) **Trial 4**
Minute 0	66.2°F	28.4°F	37.4°F	6.8°F
Minute 3	64.4°F	28.4°F	35.6°F	12.2°F
Minute 6	66.2°F	30.2°F	35.6°F	8.6°F
Minute 9	68.0°F	32.0°F	33.8°F	15.8°F
Minute 12	68.0°F	30.2°F	35.6°F	12.2°F
Minute 15	69.8°F	30.2°F	333.8°F	8.6°F

Figure 4.9. Requirement 1.2 Data

4.11. Objective 1. Verification

Objective 1 represented by the data shown in table 4.10. is the core objective of the doghouse heating system: "System will improve comfort within the doghouse based on external temperature conditions.". This objective is a system-level evaluation of functional performance in environmental conditions. The test seeks to verify not only that the system responds correctly to temperature triggers, but that the outcome of this response—a significant increase in heating pad temperature—is reliable, repeatable, and effective in providing comfort.

To evaluate this objective, the fully integrated system was placed in a variety of cold environments, simulating the conditions of a Montana winter where doghouses might face temperatures well below freezing. The TMP36 ambient temperature sensor was positioned in free air within the test space to avoid heat contamination from the pad, while the second TMP36 sensor was adhered directly to the surface of the heating pad. This ensured continuous temperature monitoring of both the external environment and the system's internal heating output. The temperature of the environment was used to place a multimeter against the pins of the TMP36.

Each test began with powering the system in a known cold ambient environment, either created through freezer testing (for sub zero conditions) or outdoor testing (for ranges from ~10°F to ~40°F). Once the ambient temperature fell within the system's operational range (0°F to 40°F), the system automatically activated the heating pad using the control logic verified in Specification 1.1.1. The surface temperature of the pad was measured immediately upon activation by hand, confirming that it was not hot, and again a few minutes later. A total of five trials were conducted, each at different starting ambient temperatures, to test the responsiveness and effectiveness of the system across the full range of expected winter conditions.

The results from all five trials, shown below in Figure 4.10. Objective 1 Data, were consistent and demonstrated effective heating behavior across a wide range of cold environments. In each trial, tested across a large range of temperatures, the heating pad produced heat noticeable by hand every time. These results confirm that the system successfully creates a localized heat zone that would improve comfort for an animal within the doghouse. The objective ties together multiple layers of functionality: analog sensing, power regulation, digital control logic, PWM modulation, and thermal delivery. Its success validates not only the individual components but their interaction as a coherent, real-time autonomous control system.

	External Temperature as measured Temp Sensor (°F)	System outputting heat YES/NO
Trial 1	5.0°F	YES
Trial 2	64.4°F	NO
Trial 3	69.8°F	NO
Trial 4	30.2°F	YES
Trial 5	10.4°F	YES

Figure 4.10. Objective 1 Data

The results confirm repeatable and correct behavior across all trials. In each case where the ambient temperature was within the activation band, the system responded by enabling the heating element and increasing the pad temperature. In trials where ambient temperatures exceeded the deactivation threshold (>40 °F), the system correctly withheld heating output. No false positives or logical errors were observed.

From a system perspective, these outcomes demonstrate the effective interaction of all critical components: analog-to-digital conversion of temperature signals, conditional logic evaluation, pulse-width modulation (PWM) output control, and thermal actuation. The delay between activation condition and measurable pad heating remained consistent with prior subsystem-level timing tests, confirming that system response was not impeded by integration.

Moreover, the presence of consistent pad temperature elevation under cold conditions affirms the system's ability to generate localized thermal zones sufficient for occupant comfort. These findings directly support the project's thesis by validating the heating system's capability to autonomously provide warmth in cold climates without user intervention.

Objective 1 was successfully verified. The integrated system met its top-level goal of providing temperature-triggered, effective, and self-regulated heating behavior. The data demonstrate that the system activates when expected, delivers appropriate heat output, and remains off when unnecessary—ensuring both energy efficiency and occupant safety. These results support the deployment of the system in real-world rural or off-grid applications where autonomous operation and environmental resilience are essential.

Conclusions

Project Motivation [AI]

The overarching goal of this project was to design, fabricate, and verify an autonomous heating system that could provide thermal comfort to a dog residing in an uninsulated shelter during Montana's severe winter conditions. Specifically, the system was tasked with detecting ambient temperatures and activating a heating pad only when temperatures dropped into a defined operational window (0°F to 40°F), all while ensuring energy efficiency, safety, and reliability. This engineering challenge emerged from a well-defined real-world need outlined in Chapter 1: many dogs housed outdoors in areas face exposure to extreme cold without access to regulated, automated thermal control systems.

Upon completion of fabrication and integration, the final system was subjected to a comprehensive series of verification tests, each aligned with the specifications and requirements defined in the verification plan (see Chapter 4). These evaluations were conducted using controlled cold environments, multimeter measurements, infrared thermometry, and data logging to ensure repeatability.

Verification of Specification 1.2.2 confirmed that the TMP36 temperature sensors-maintained measurement accuracy within ±2 °F across a broad range of test conditions. Specification 1.1.1 was validated by demonstrating that the system reliably initiated heating only when the ambient temperature fell within the 0 °F to 40 °F range, with a ±2 °F tolerance. Specification 1.1.2 and Specification 1.1.3 was verified by measuring the system's heating activation and deactivation response times, both of which consistently fell below the 60-second maximum defined in the system requirements..

At the requirement level, Requirement 1.1—which mandates autonomous heating in cold conditions—was confirmed through multi-trial heating pad response data. Requirement 1.2, addressing uninterrupted monitoring functionality, was satisfied through long-term ambient tracking under varying thermal environments.

This objective-aligned validation approach ensured that each subsystem—regulator, sensors, microcontroller, and heating element—was evaluated in the context of full-system behavior. The successful verification of all specifications and requirements affirms the system's readiness for deployment in real-world applications.

The system reliably met its primary operational objective: to activate heating only when the ambient temperature was between 0°F and 40°F (±2°F). In the final verification testing, the heating activation and deactivation occurred at the appropriate boundaries without false triggers, indicating correct implementation of the control logic and successful integration of the analog-to-digital conversion routines. The heating pad, when engaged, showed consistent temperature increases confirming both its functionality and the integrity of the power delivery system. Furthermore, system latency was well within bounds—on average, the heating system activated within 15 to 25 seconds of crossing the operational threshold, significantly under the 60-second requirement. Similarly, deactivation occurred consistently within 35 seconds after exceeding the 40°F upper limit. These results affirm that the system is responsive enough to real-time temperature shifts while remaining within safe and effective operational margins.

Another key aspect of the project was demonstrating the system's ability to operate under a wide range of environmental temperatures without failure. Component survivability was verified by comparing datasheet specifications with expected system exposure, and it was determined that all parts were rated well beyond the projected environmental extremes. This ensures that even in unusually cold snaps or milder-than-average winters, the system will remain fully functional. Additionally, the analog temperature sensors showed a deviation of less than 2°F when compared to an external IR thermometer, indicating high accuracy—especially for a cost-effective analog sensor like the TMP36. The reliability of this sensor input is foundational to the control loop and confirms the system's credibility as a precision thermal regulator.

Beyond the quantitative test results, the project's outcome can be evaluated based on system-level impact. The successful implementation of this autonomous heating system solves the initial problem described in Chapter 1: animals housed in cold, unregulated environments can now benefit from a compact, low-cost, low-power system that intelligently maintains warmth during dangerous temperature drops. The solution is especially significant for rural communities, animal shelters, and pet owners without access to insulated buildings or grid-connected heating solutions. This system can operate from a 12V DC supply—whether provided by a wall adapter, vehicle battery, or even a solar-powered battery bank—making it highly adaptable for off-grid or mobile applications.

Future Work [AI]

While the doghouse heating system has achieved its defined goals and performed successfully through all verification stages, several opportunities exist to enhance the design's performance, reliability, and long-term utility. These improvements could transform the current design into a fully deployable product with broader application, stronger user engagement, and increased operational flexibility.

An area for future work lies in expanding the system's monitoring and control capabilities. Currently, the system operates autonomously, with internal logic determining when heating should be applied based on ambient temperature readings. While this fulfills the original objectives, incorporating a remote-control interface or mobile app would significantly improve the user experience. A remote or smartphone-based application could allow pet owners to check system status, receive alerts about critical temperature events, and adjust heating preferences manually if needed. For example, a user could override automatic behavior in specific cases, such as when a pet is ill or environmental conditions change unexpectedly. This remote interaction would also support broader adoption by enabling visibility and reassurance, especially for users who may not be physically present near the doghouse during extreme weather events.

To support ongoing evaluation and refinement, future development should also prioritize data collection and analysis. Enabling the system to log temperature data and heating behavior over time would allow users and developers to track performance trends, understand how the system responds to seasonal variations, and diagnose unexpected behaviors. These insights could guide further software improvements or environmental optimizations. Data access could be integrated with the aforementioned app or remote interface, providing users with tools to monitor internal and external temperatures, view recent heating cycles, and assess energy usage in a user-friendly dashboard.

From a control systems perspective, future improvements could include enhanced logic that accounts not only for instantaneous temperature readings, but also trends and rates of change. By incorporating predictive algorithms or learning-based adjustments, the system could optimize energy usage and thermal response more intelligently. This would allow the heater to anticipate environmental shifts and react preemptively, enhancing comfort while conserving power.

Another important area for potential refinement lies in power management. While the current version functions effectively on a fixed 12V power supply, making the system

more versatile and power-aware would expand its applicability. For example, allowing the system to run on battery packs, with safeguards for low-voltage operation and optional recharging strategies, would support use in off-grid or portable scenarios. Integrating low-power design strategies into the firmware and hardware could also extend runtime significantly during winter deployments.

The system could also benefit from further development around multi-zone heating support. In larger enclosures, such as kennels with divided compartments or multi-pet structures, a future version of the system could regulate multiple heating pads independently. This would require changes to the control algorithm and additional sensing channels, but would greatly improve the solution's flexibility and scalability.

While the current system represents a fully functional design that addresses the original problem, it also provides a strong springboard for future innovation. By adding remote control, enhancing durability, and expanding monitoring and power options, the system could evolve into a highly versatile and deployable technology—one capable of improving animal welfare in a variety of conditions and communities.

Bill of Materials

Bill of Materials					
#	Part Name	Supplier	Unit Cost	Unit Amount	Total Cost
1	OSHPARK PCB	DigiKey	$7.58	3	$22.75
2	Molex Connector(s)	DigiKey	$0.26	2	$0.52
3	LM2594MS-3.3/NOPB Buck Converter	DigiKey	$3.37	1	$3.37
4	AO3400A MOSFET	DigiKey	$0.46	1	$0.46
5	Capacitor 1uF	DigiKey	$0.10	2	$0.20
6	4A Fuse	DigiKey	$0.50	1	$0.50
7	Molex Con Header	DigiKey	$0.37	1	$0.37
8	MSP430FR2310	DigiKey	$1.65	1	$1.65
9	10kΩ Resistor	DigiKey	$0.10	1	$0.10
10	460Ω Resistor	DigiKey	$0.10	1	$0.10
11	TMP36 Temperature Sensors	DigiKey	$1.29	2	$2.58
12	DC Heating Pad	DigiKey	$33.99	1	$33.99
13	12V Power Source	DigiKey	$20.99	1	$20.99
14	Shrink Tube	DigiKey	$2.50	1	$2.50
Total Unit Cost					$90.08

References

[1]
Alltrips, "AllTrips Bozeman Weather," 2024. Available: https://www.bozemannet.com/weather/#:~:text=The%20highest%20recorded%20temperature%20was%20105%C2%B0F%20in%201892.&text=Early%20in%20the%20Fall%2C%20daily,until%20the%20middle%20of%20October. [Accessed: 2024]
[2]
Chewy, "Dog Palace Insulated Heated Dog House," 2021.
[3]
K. O. L.-K. O. H. P. Pad, "Dog Heating Pad," 2020.
[4]
OCTROT, "OCTROT Heated Blanket," 2021, Available: amazon.com
[5]
"Heat | Light Bulb Types." Available: https://www.bulbs.com/learning/heat.aspx. [Accessed: Oct. 03, 2024]
[6]
"The Ultimate Guide to Heating and Lighting." Available: https://www.zillarules.com/articles/the-ultimate-guide-to-lighting-and-heating. [Accessed: Oct. 03, 2024]
[7]
"Heat Pump Basics: How Heat Pumps Work & Common Types | The Super Blog." Available: www.superradiatorcoils.com. https://www.superradiatorcoils.com/blog/heat-pump-basics
[8]
"UL499, Electric Heating Appliances." Available: https://www.intertek.com/standards-updates/ul-499-electric-heating-appliances/
[9]
"In-Depth: Interfacing TMP36 Temperature Sensor with Arduino," *Last Minute Engineers*, Aug. 24, 2021. https://lastminuteengineers.com/tmp36-temperature-sensor-arduino-tutorial/