Power

File: Power.kicad_sch

Buttons_Joys

File: Buttons.kicad_sch

MCU

File: MCU.kicad_sch

RGBs

File: RGBs.kicad_sch

Radio

File: Radio.kicad_sch

Sheet: /
File: FlexRC.kicad_sch

Title:

Size: A4	Date:	**Rev:**
KiCad E.D.A. 9.0.6		Id: 1/6

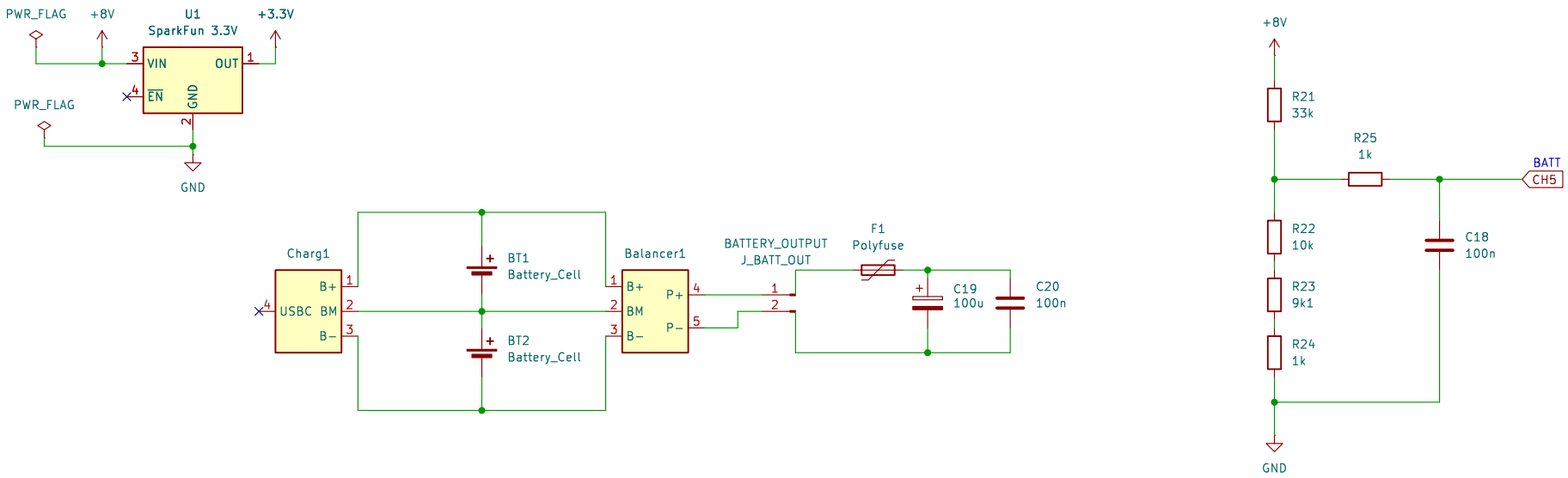

Sheet: /Power/
File: Power.kicad_sch

Title:

Size: A4	Date:	Rev:
KiCad E.D.A. 9.0.6		Id: 2/6

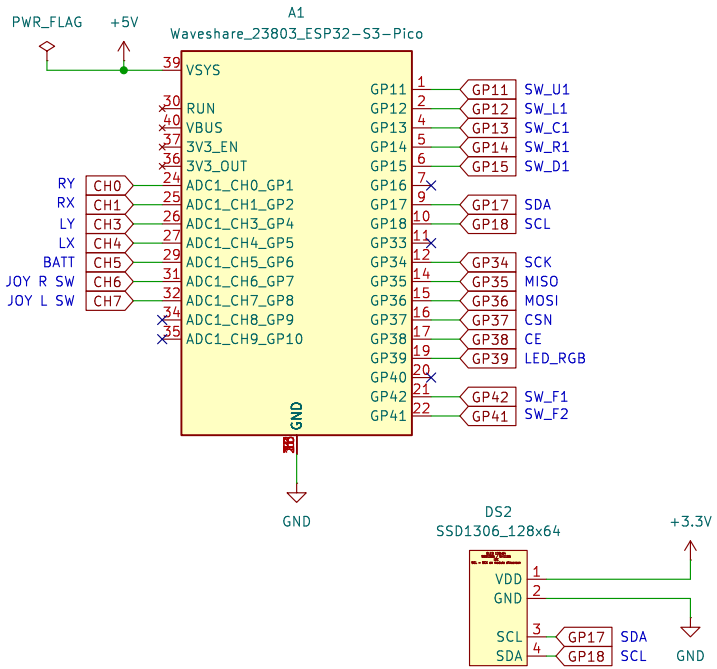

Sheet: /MCU/
File: MCU.kicad_sch

Title:

Size: A4	Date:	Rev:
KiCad E.D.A. 9.0.6		Id: 3/6

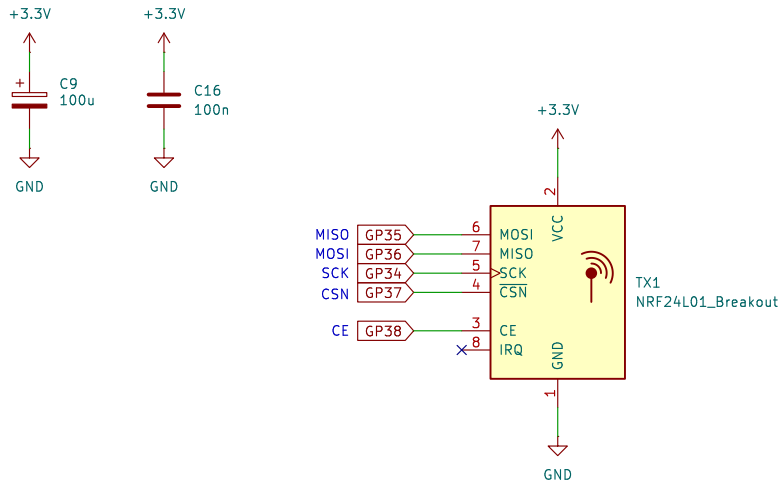

Sheet: /Radio/
File: Radio.kicad_sch

Title:

Size: A4	Date:	Rev:
KiCad E.D.A. 9.0.6		Id: 4/6

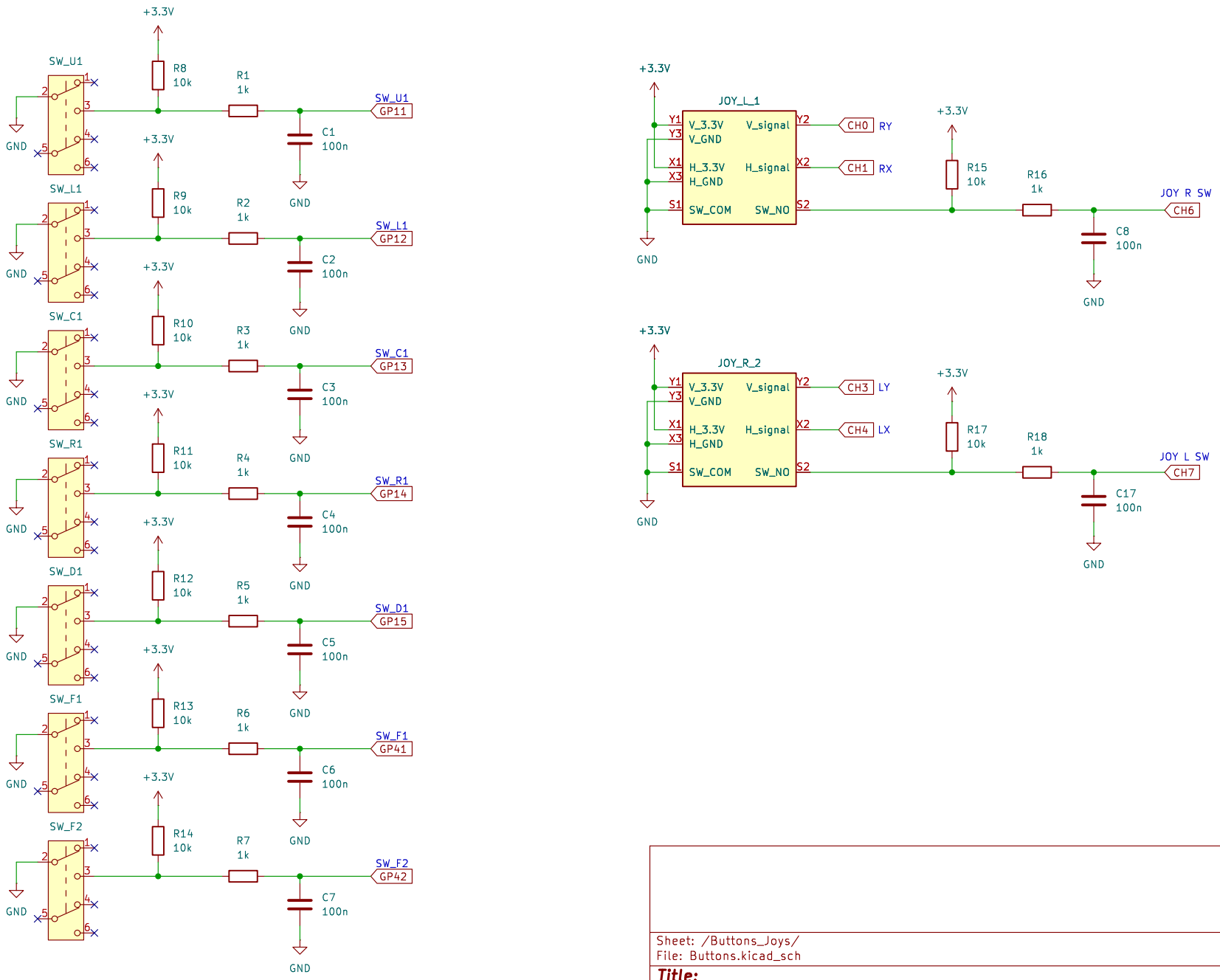

Sheet: /Buttons_Joys/
File: Buttons.kicad_sch

Title:

Size: A4	Date:	Rev:
KiCad E.D.A. 9.0.6		Id: 8/6

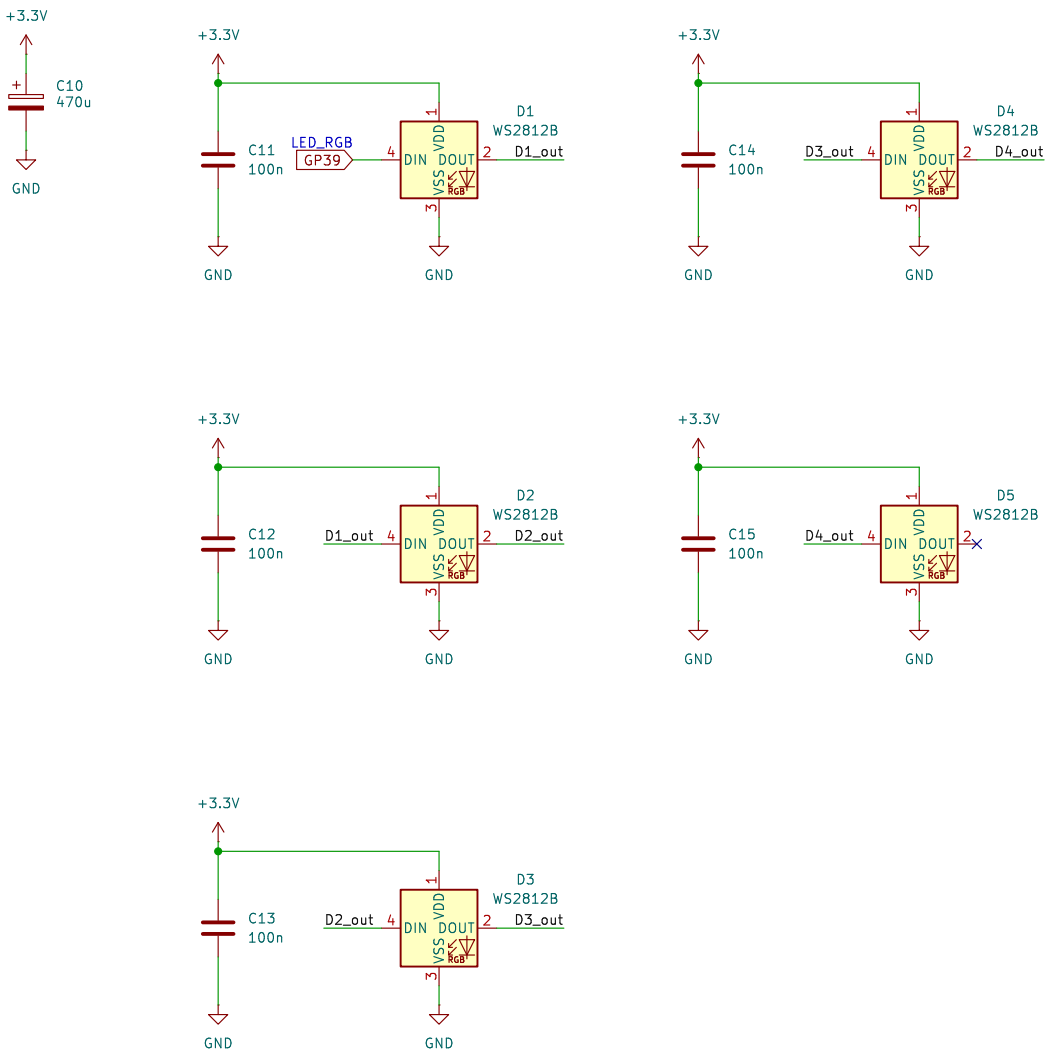

Sheet: /RGBs/
File: RGBs.kicad_sch

Title:

Size: A4	Date:	**Rev:**
KiCad E.D.A. 9.0.6		Id: 9/6