Power

File: Power.kicad_sch

Buttons_Joys

File: Buttons.kicad_sch

MCU_RADIO_OLED

File: MCU.kicad_sch

RGBs

File: RGBs.kicad_sch

https://github.com/LukeSky91/FlexRC
Luke
Flex Electronics

Sheet: /
File: FlexRC.kicad_sch

Title: FlexRC

Size: A4	Date: 2026-03-06	**Rev: V1**
KiCad E.D.A. 9.0.6		Id: 1/5

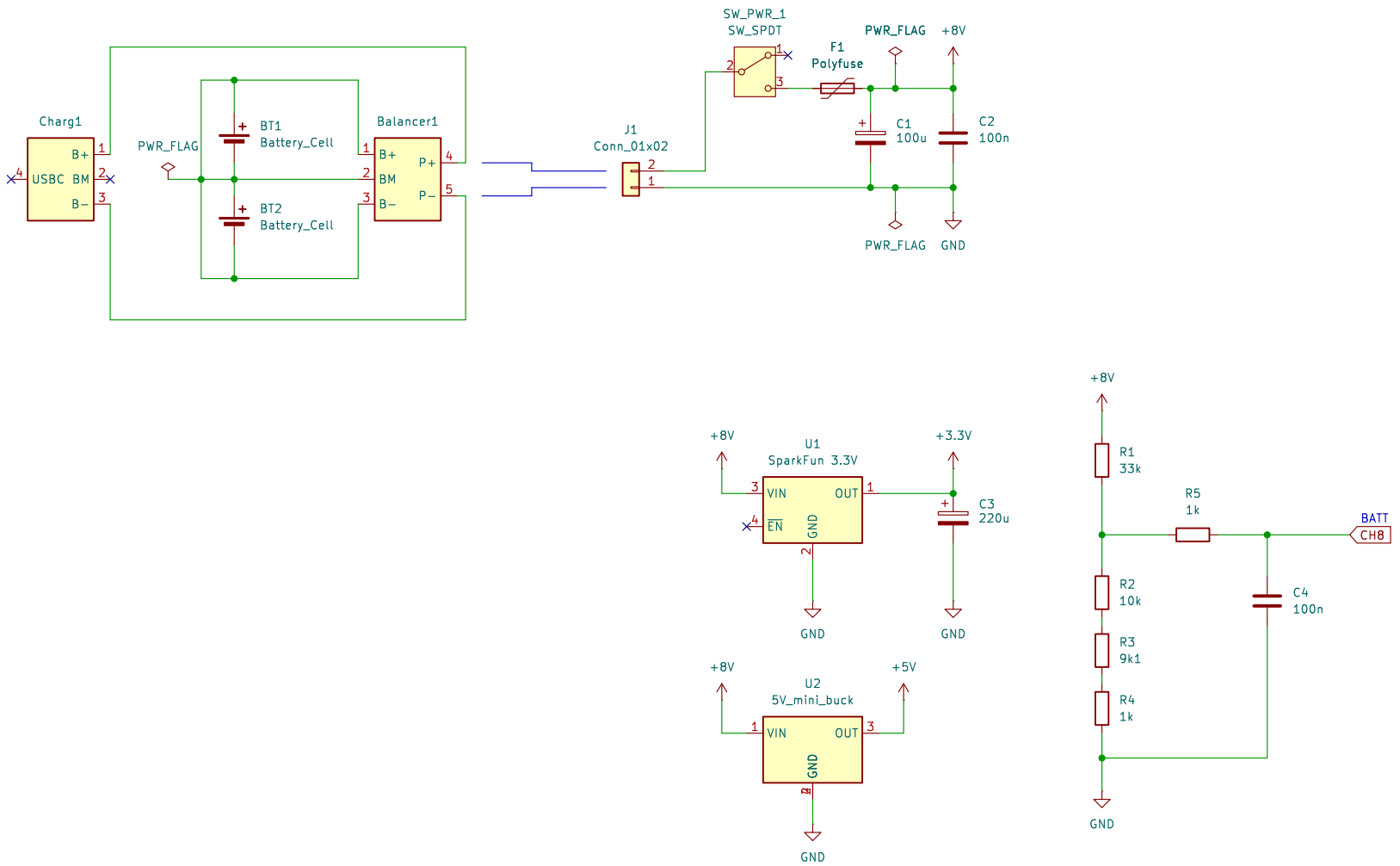

https://github.com/LukeSky91/FlexRC
Luke
Flex Electronics

Sheet: /Power/
File: Power.kicad_sch

Title: FlexRC

Size: A4	Date: 2026-03-06	**Rev: V1**
KiCad E.D.A. 9.0.6		Id: 2/5

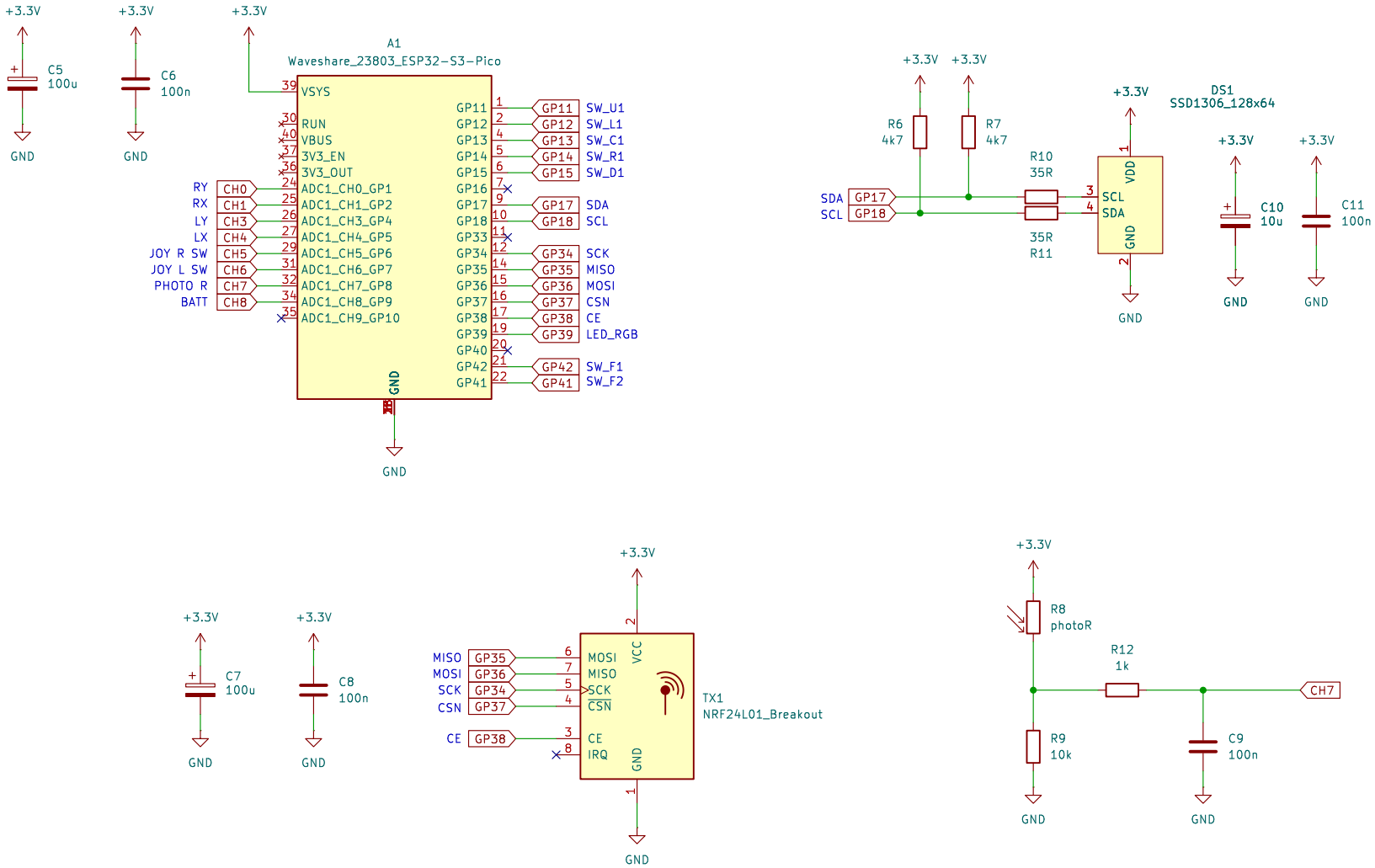

https://github.com/LukeSky91/FlexRC
Luke
Flex Electronics

Sheet: /MCU_RADIO_OLED/
File: MCU.kicad_sch

Title: FlexRC

Size: A4	Date: 2026-03-06	**Rev: V1**
KiCad E.D.A. 9.0.6		Id: 3/5

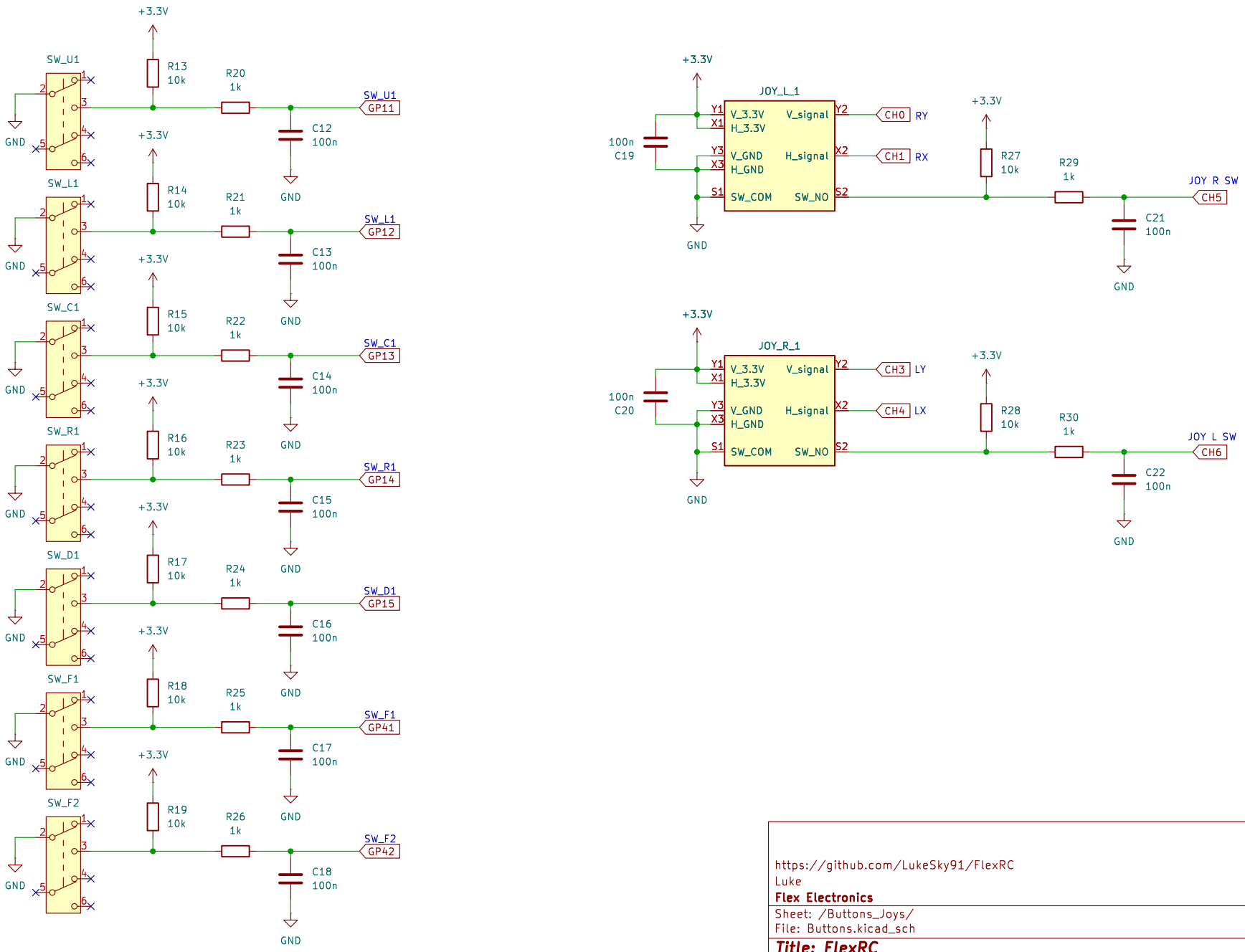

https://github.com/LukeSky91/FlexRC
Luke
Flex Electronics

Sheet: /Buttons_Joys/
File: Buttons.kicad_sch

Title: FlexRC

Size: A4	Date: 2026-03-06	**Rev: V1**
KiCad E.D.A. 9.0.6		Id: 4/5

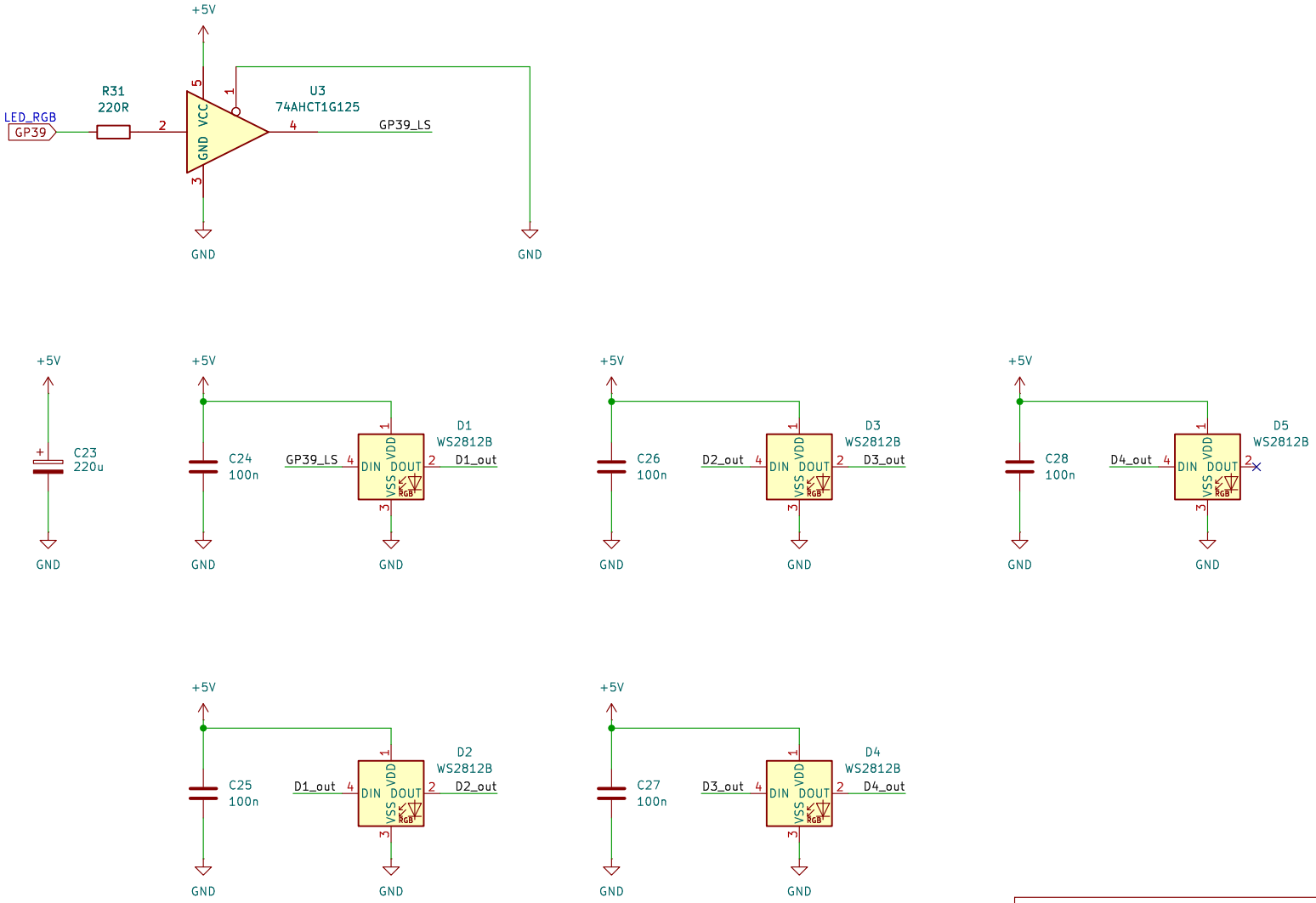

https://github.com/LukeSky91/FlexRC
Luke
Flex Electronics

Sheet: /RGBs/
File: RGBs.kicad_sch

Title: FlexRC

Size: A4	Date: 2026-03-06	**Rev: V1**
KiCad E.D.A. 9.0.6		Id: 5/5