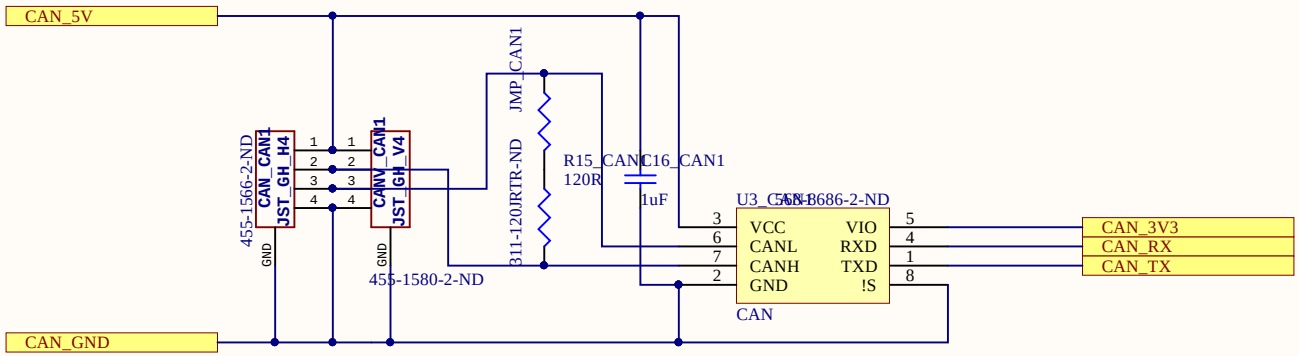

Cannot open file D:\Git\OpenMotorDrive\OMD_Hardware\Templates\88x31.png

https://creativecommons.org/licenses/by-nc-sa/4.0/

For Commercial use, please contact ProfiCNC

ProfiCNC does NOT guaranty these drawings as fit for any purpose, you must verify this information before attempting to use it in any way. USE AT OWN RISK

Title			*ProfiCNC Pty. Ltd.*
Size: A4	Number:	Revision:	
Date: 4/01/2018	Time: 9:35:22 AM	Sheet of	
File: E:\Git\OMD\OMD_Hardware\Schematics\OMD_CAN_HORIZONTAL_dual.SchDoc			

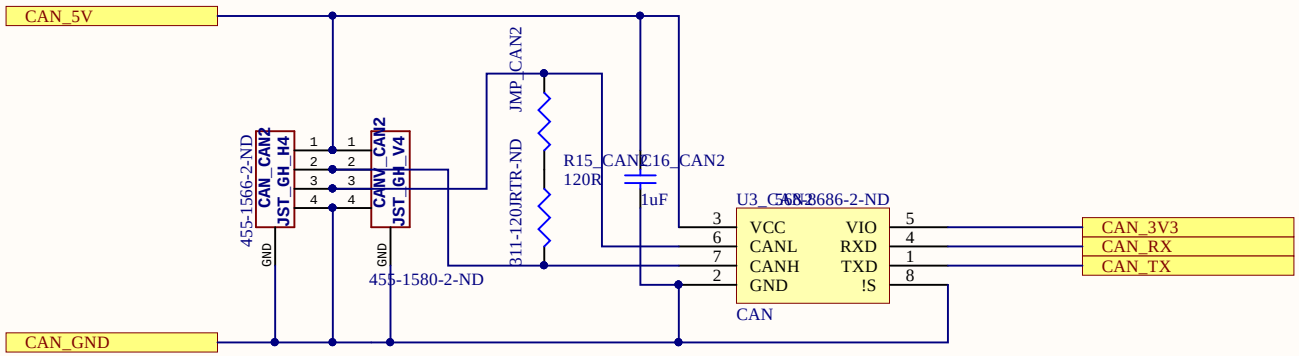

Cannot open file D:\Git\OpenMotorDrive\OMD_Hardware\Templates\88x31.png

https://creativecommons.org/licenses/by-nc-sa/4.0/

For Commercial use, please contact ProfiCNC

ProfiCNC does NOT guaranty these drawings as fit for any purpose, you must verify this information before attempting to use it in any way. USE AT OWN RISK

Title			*ProfiCNC Pty. Ltd.*
Size: A4	Number:	Revision:	
Date: 4/01/2018	Time: 9:35:22 AM	Sheet of	
File: E:\Git\OMD\OMD_Hardware\Schematics\OMD_CAN_HORIZONTAL_dual.SchDoc			

https://github.com/OpenMotorDrive

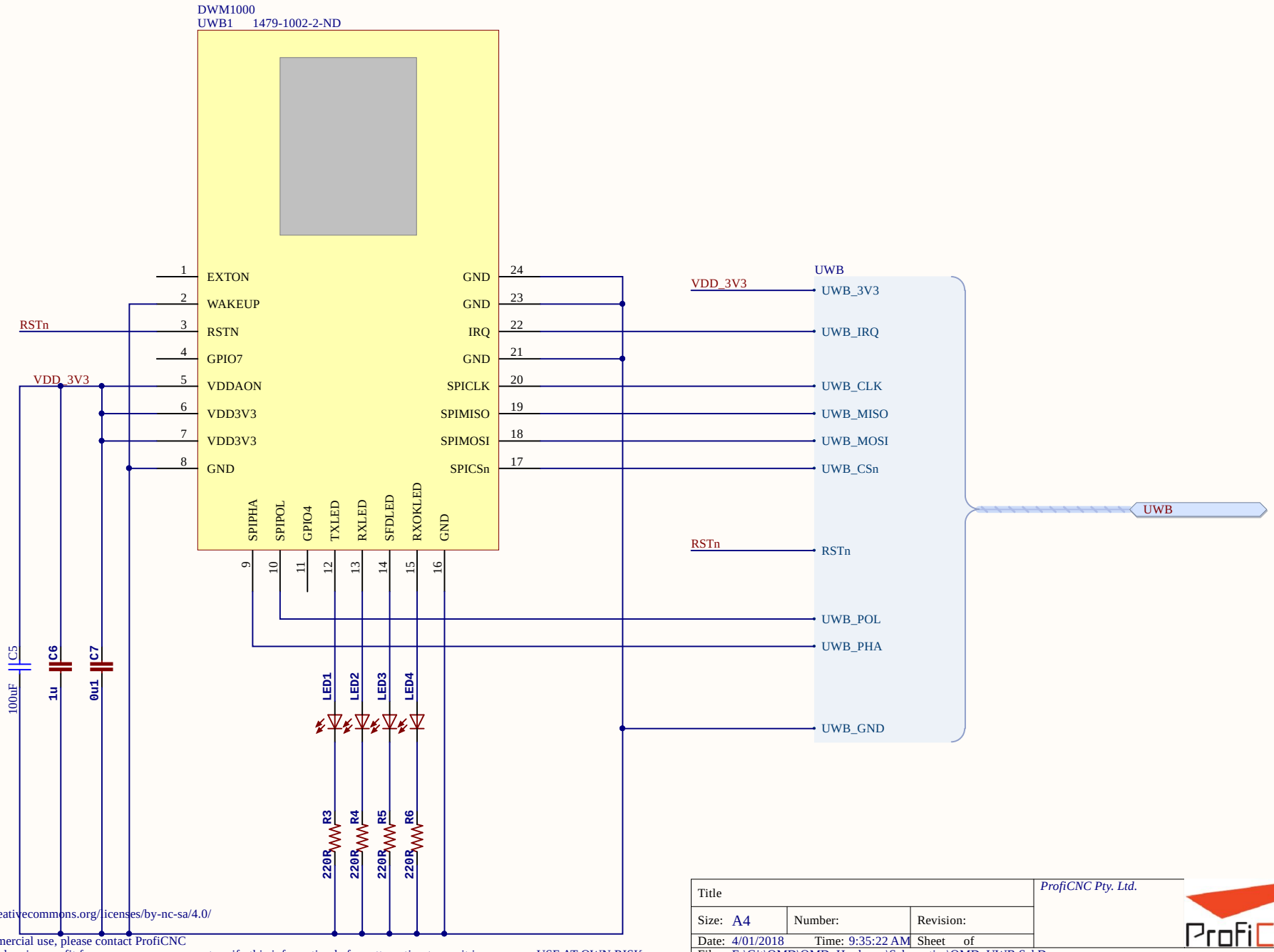

Cannot open file D:\Git\OpenMotorDrive\OMD_Hardware\Templates\88x31.png

https://creativecommons.org/licenses/by-nc-sa/4.0/

For Commercial use, please contact ProfiCNC

ProfiCNC does NOT guaranty these drawings as fit for any purpose, you must verify this information before attempting to use it in any way. USE AT OWN RISK

Title			*ProfiCNC Pty. Ltd.*
Size: A4	Number:	Revision:	
Date: 4/01/2018	Time: 9:35:22 AM	Sheet of	
File: E:\Git\OMD\OMD_Hardware\Schematics\OMD_UWB.SchDoc			

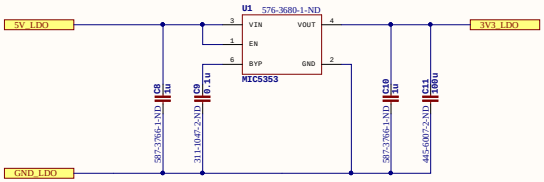

Cannot open file
D:\Git\OpenMotorDrive\OMD_Hardware\Templates\

https://creativecommons.org/licenses/by-nc-sa/4.0/

For Commercial use, please contact ProfiCNC

ProfiCNC does NOT guaranty these drawings as fit for any purpose, you must verify this information before attempting to use it in any way. USE AT OWN RISK

Title			*ProfiCNC Pty. Ltd.*
Size: A2	Number:	Revision:	
Date: 4/01/2018	Time: 9:35:22 AM	Sheet of	
File: E:\Git\OMD\OMD_Hardware\Schematics\UWB_5V-3V3_LDO.SchDoc			

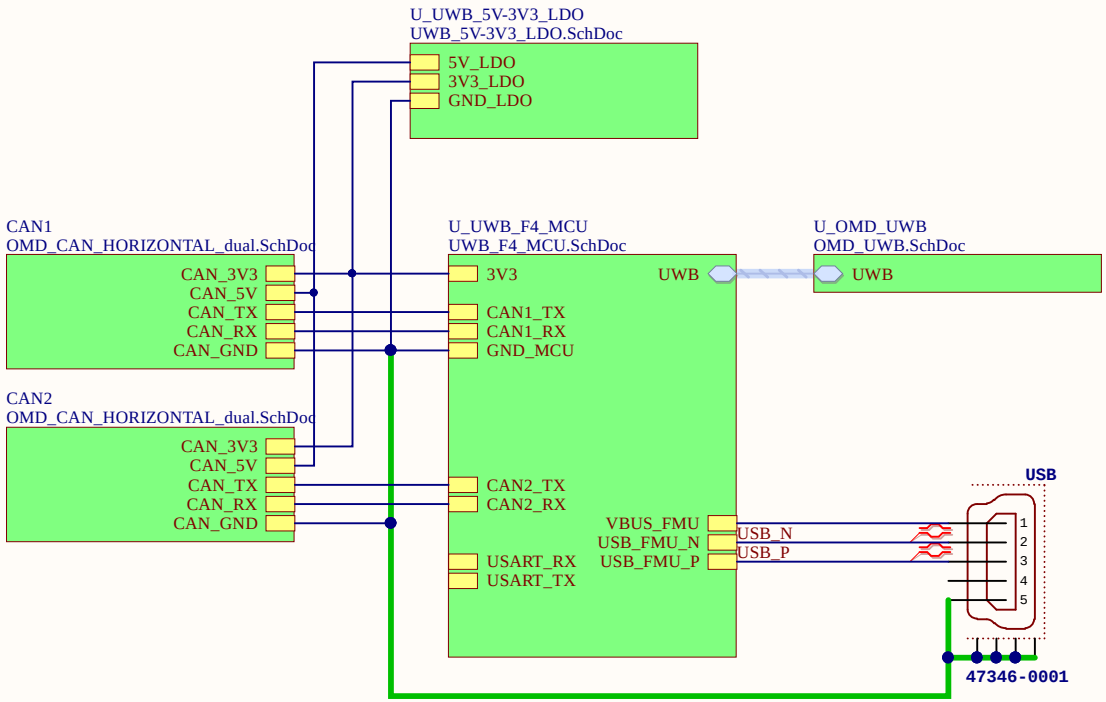

Title *			
Size: A4	Number:*	Revision:*	
Date: 4/01/2018	Time: 9:35:22 AM	Sheet* of *	
File: E:\Git\OMD\OMD_Hardware\Schematics\UWB_F4_CAN_UWB_layout_R2.SchDoc			

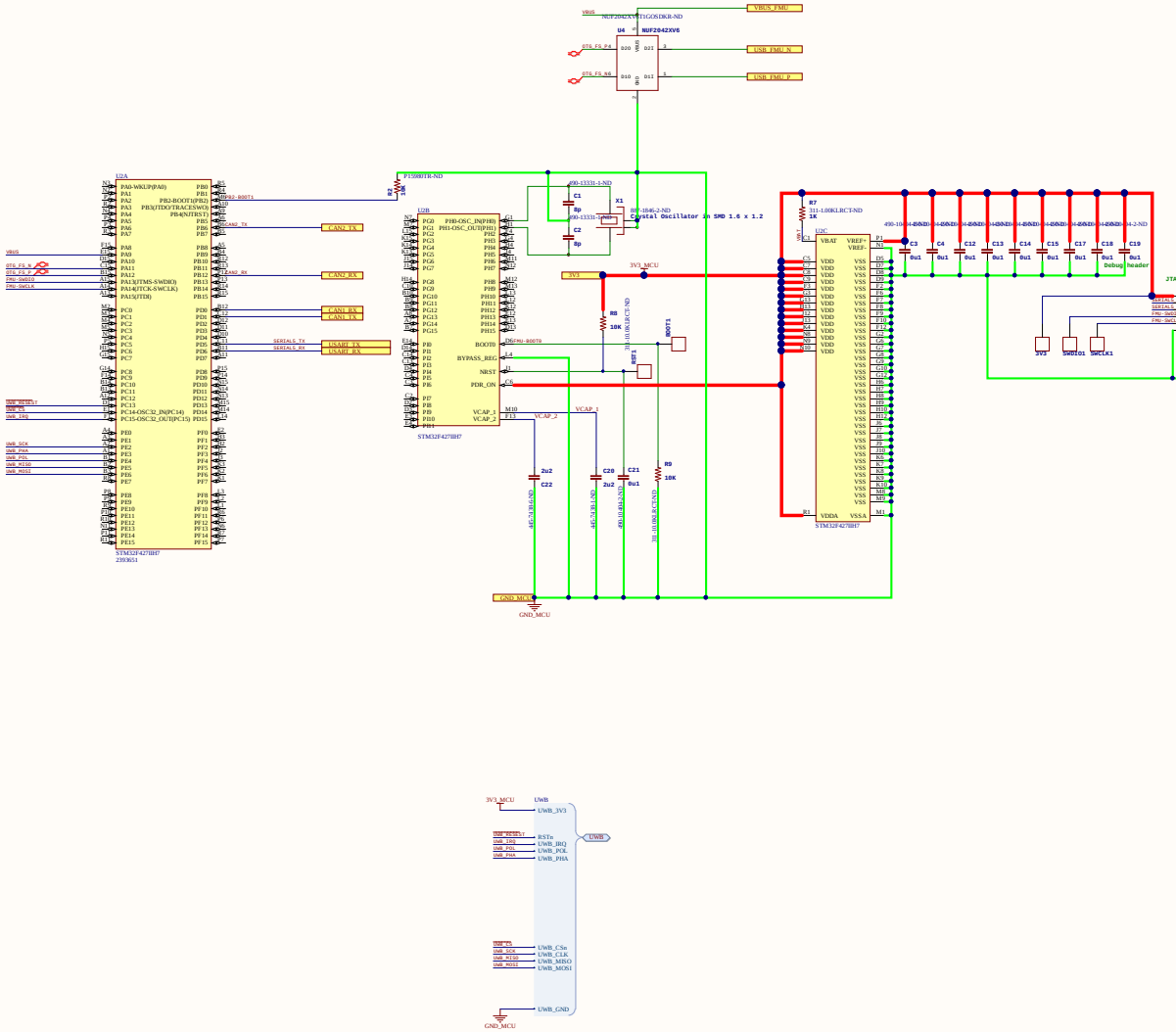

Title			Altium Limited L3, 12a Rodborough Rd Frenchs Forest NSW Australia 2086
Size: A1	Number:	Revision:	
Date: 4/01/2018	Time: 9:35:21 AM	Sheet of	
File: E:\Ca\OMAD\OMD_Hardware\Schematics\UWB_F4_MK1.SchDoc			