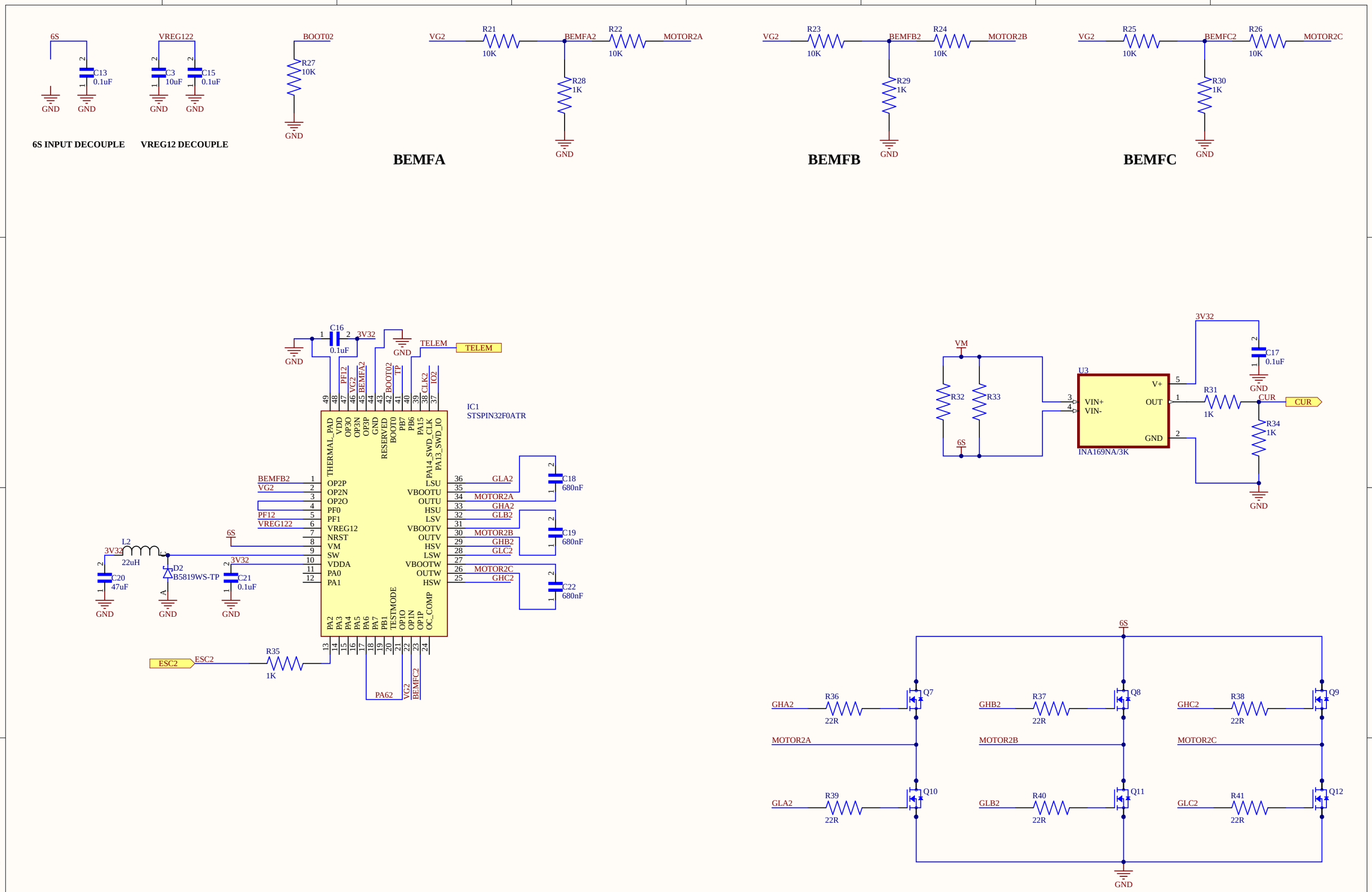

Title		
Size A3	Number	Revision
Date: 1-15-2023	Sheet of	
File: C:\Users\..\STSPIN32F0A ESC2.SchDoc	Drawn By:	

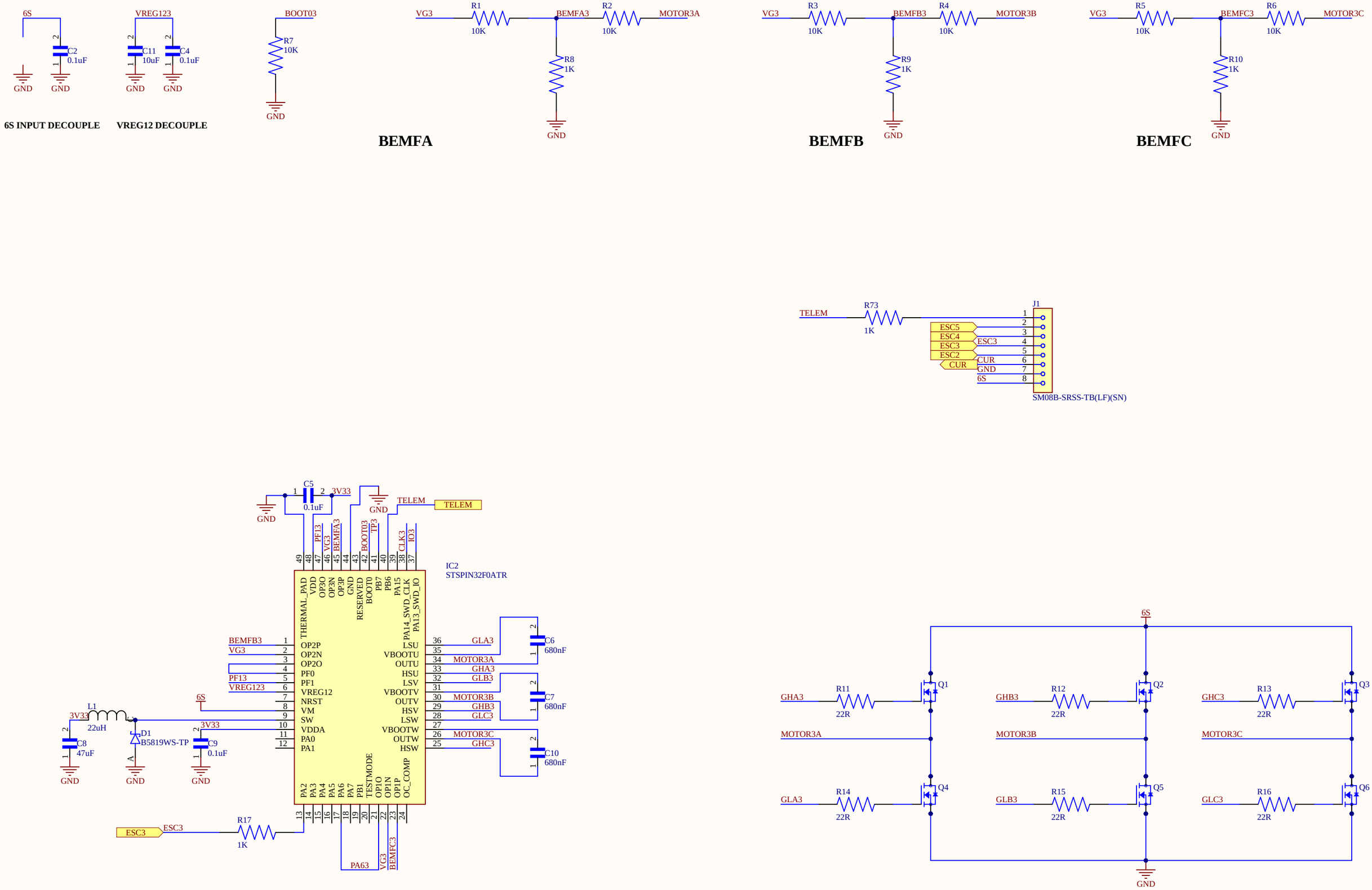

Title		
Size A3	Number	Revision
Date: 1-15-2023	Sheet of	
File: C:\Users\..\STSPIN32F0A ESC3.SchDoc	Drawn By:	

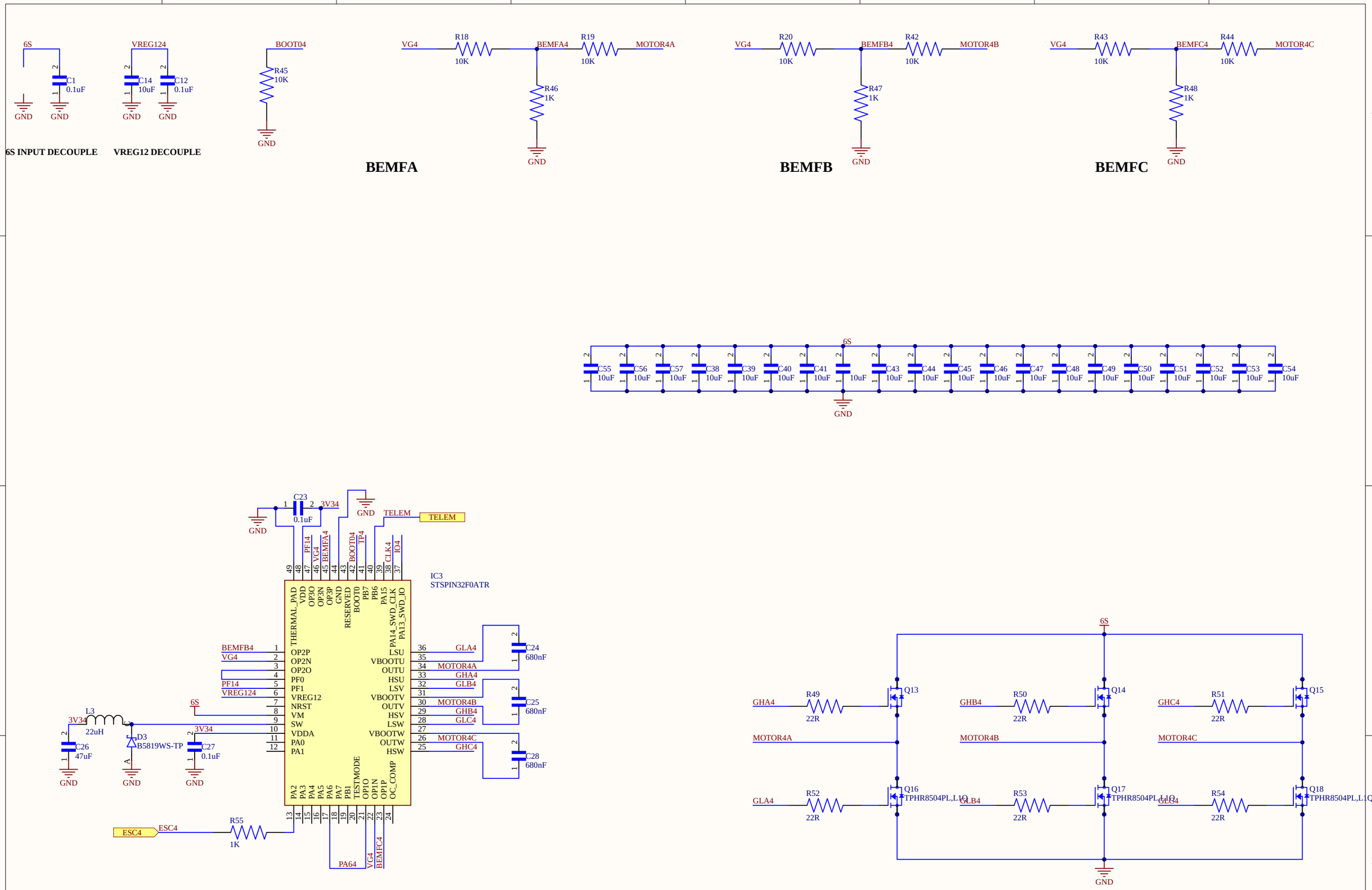

Title		
Size A3	Number	Revision
Date: 1-15-2023	Sheet of	
File: C:\Users\..\STSPIN32F0A ESC4.SchDoc	Drawn By:	

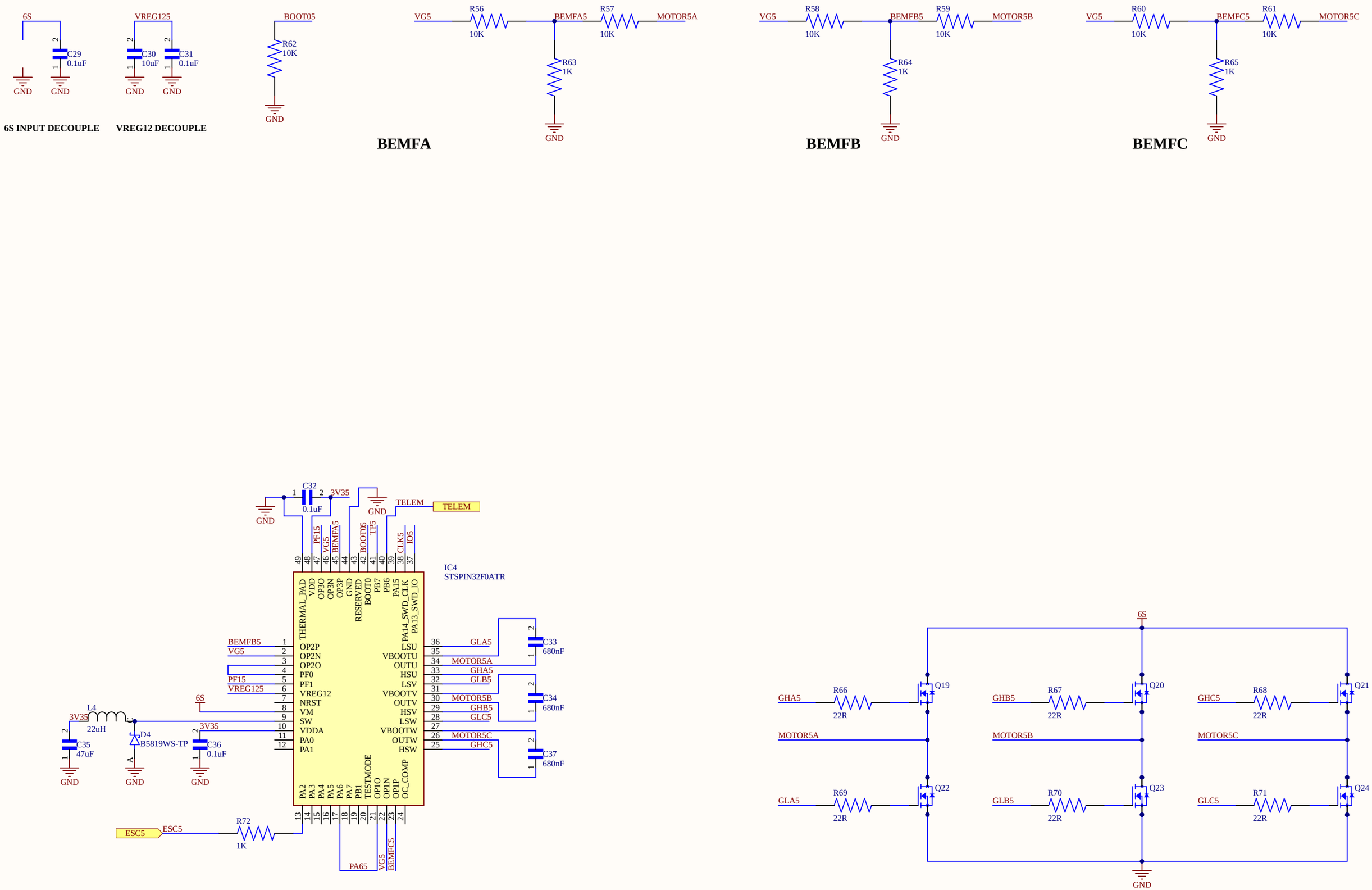

Title		
Size A3	Number	Revision
Date: 1-15-2023		Sheet of
File: C:\Users\..\STSPIN32F0A ESC5.SchDoc		Drawn By: