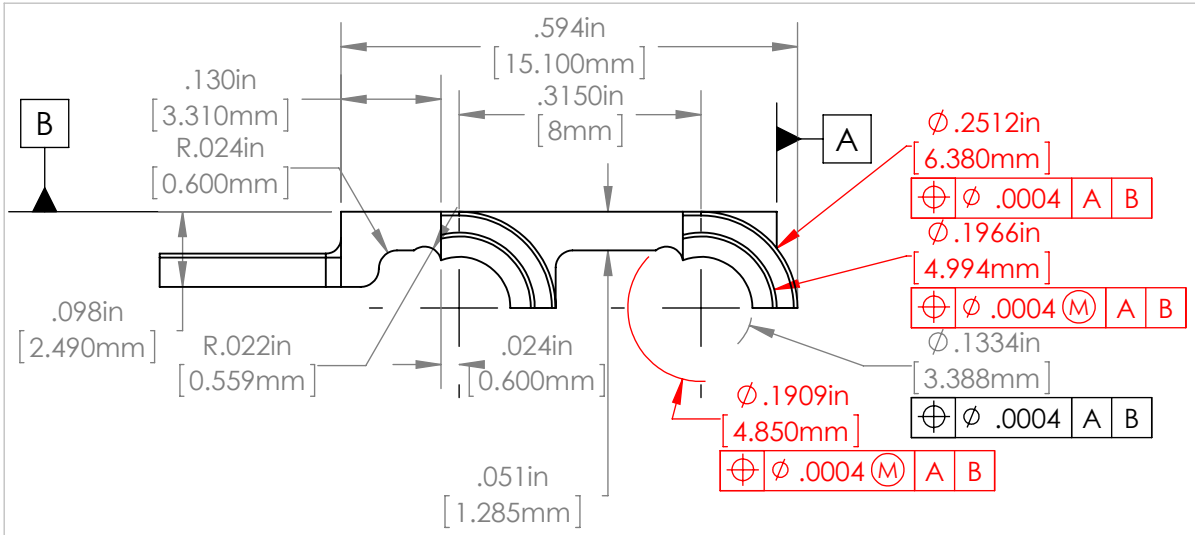

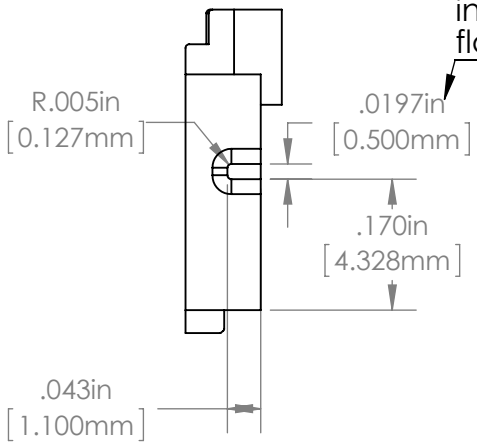

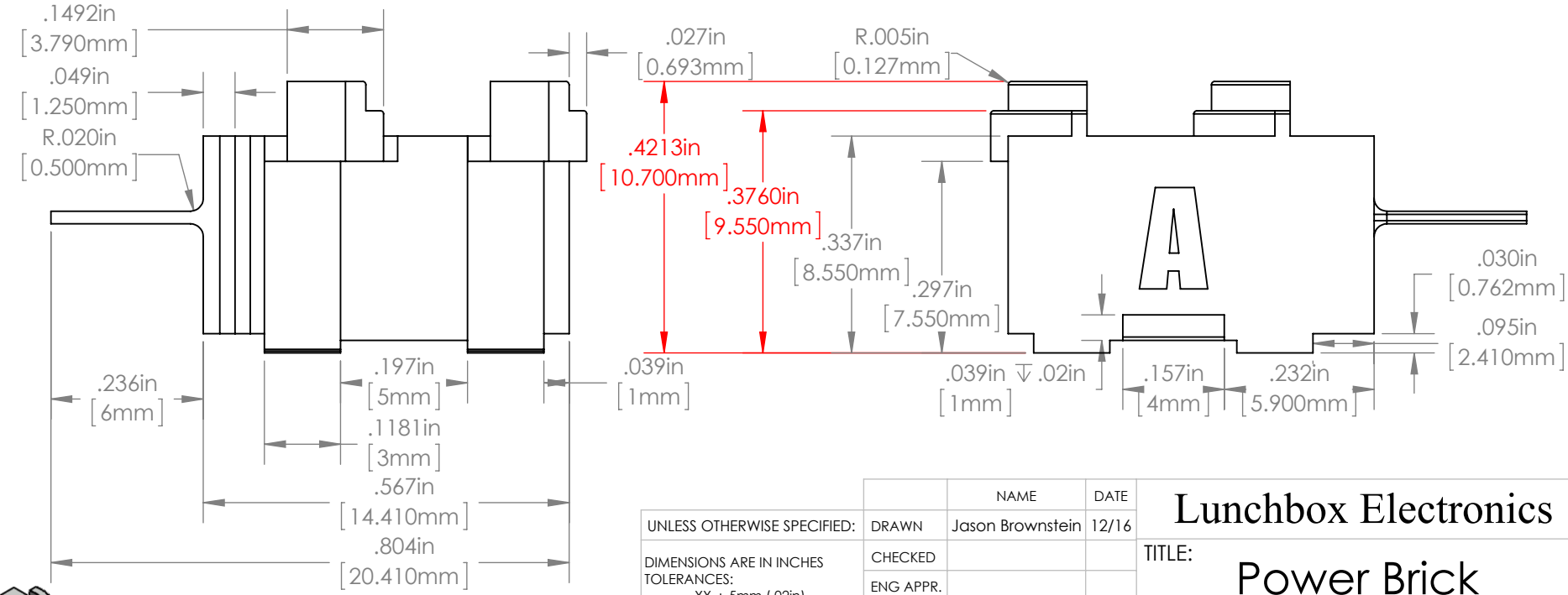

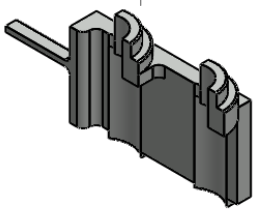

Part drafted to reduce mass

THE INFORMATION CONTAINED IN THIS DRAWING IS LICENSED BY LUNCHBOX ELECTRONICS UNDER CC-BY-SA.

UNLESS OTHERWISE SPECIFIED:

DIMENSIONS ARE IN INCHES
TOLERANCES:
.XX ±.5mm (.02in)
.XXX ±.1mm (.004in)
.XXXX ±.01mm (.0005in)
ANGLES ±.5 deg

MATERIAL
Zinc Zamek #5

FINISH
EDM

DO NOT SCALE DRAWING

	NAME	DATE
DRAWN	Jason Brownstein	12/16
CHECKED		
ENG APPR.		
MFG APPR.		
Q.A.		

COMMENTS:

Last Revision: 4/4/2017

Lunchbox Electronics

TITLE:

Power Brick Diecast Insert Side A

SIZE	DWG. NO.	REV
A		4

SCALE: 4:1 | WEIGHT: 1.16gr | SHEET 1 OF 1

5 4 3 2 1