DOA Estimation for Joint Sensing and Communication with Nonorthogonal Waveform

Luning Lin[†], Zongyu Zhang[†], Hang Zheng[†], Chengwei Zhou[†,‡], and Zhiguo Shi[†,♯]
[†]College of Information Science and Electronic Engineering, Zhejiang University, Hangzhou 310027, China
[‡]Key Laboratory of Collaborative Sensing and Autonomous Unmanned Systems of Zhejiang Province, Hangzhou 310015, China
[♯]International Joint Innovation Center, Zhejiang University, Haining 314400, China
E-mail: luninglin@zju.edu.cn, zongyu_zhang@zju.edu.cn, hangzheng@zju.edu.cn, zhouchw@zju.edu.cn, shizg@zju.edu.cn

2022 56th Asilomar Conference on Signals, Systems, and Computers | 978-1-6654-5906-8/22/$31.00 ©2022 IEEE | DOI: 10.1109/IEEECONF56349.2022.10052043

***Abstract*—In this paper, a virtual sensing matrix-based direction-of-arrival (DOA) estimation method is proposed for the joint sensing and communication system. To maintain high communication rate, fully nonorthogonal communication waveforms are employed, which however, limit the virtual array derivation in the existing DOA estimation methods to achieve accurate estimation. To address this problem, we formulate a virtual sensing matrix from the estimated sensing channels, rather than directly constructing the virtual array from the received signals. As such, the reliance on the waveform orthogonality during virtual array derivation can be avoided. As a result, the DOAs of non-cooperative targets can be estimated by treating the virtual sensing matrix as the equivalent first-order observation matrix of an augmented virtual array and incorporating the subspace processing. Simulation results validate the effectiveness of the proposed method in both estimation accuracy and angular resolution.**

***Index Terms*—DOA estimation, joint sensing and communication, nonorthogonal waveform, virtual sensing matrix.**

I. Introduction

Direction-of-arrival (DOA) estimation in joint sensing and communication system serves an important role for non-cooperative targets localization, channel estimation, and so on [1–5]. In pursuit of spectral efficiency, a unified waveform should be utilized for both sensing and communication [6–11], while the waveforms considered in separate multiple-input and multiple-output (MIMO) radar and MIMO communication systems are nonunified [12–14]. Among the waveform candidates, the communication waveform facilitates both a compatibility with existing 5G infrastructure and a high communication rate [15–17]. Thus, to maintain the communication rate in the MIMO-based joint sensing and communication system, fully nonorthogonal communication waveforms can be exploited. However, in such a nonorthogonal scenario, the DOA estimation performance for non-cooperative targets can be limited.

To be specific, the DOA estimation requires fully or partially orthogonal waveforms to achieve virtual array derivation in most related works for MIMO-based joint sensing and communication system. To name a few, an interleaving frame structure is proposed to divide subcarriers into several groups for DOA estimation [18]. In this way, the waveforms between different transmit antennas are orthogonal, and thus, an augmented virtual array can be derived to enhance the DOA estimation performance [19–21]. Furthermore, a sparse signal recovery (SSR)-based DOA estimation method considering partially orthogonal signal model is proposed, where each transmit antenna possesses an additional orthogonal subcarrier for virtual array derivation [22]. However, the communication rate is constrained in the aforementioned fully or partially orthogonal scenarios, since the number of available subcarriers for each transmit antenna is limited. In this regard, DOA estimation based on nonorthogonal MIMO communication waveforms is considered [23]. Nevertheless, the virtual array derivation cannot be achieved, and the performance of DOA estimation is thereby limited. Hence, it remains challenging to perform DOA estimation with virtual array derivation utilizing fully nonorthogonal communication waveforms.

In this paper, a virtual sensing matrix-based DOA estimation method is proposed for joint sensing and communication system, where a fully nonorthogonal signal model is utilized to maintain high communication rate. By exploiting all the transmitted symbols as *prior* information, the sensing channels of multiple subcarriers are estimated, which are then vectorized to form the virtual sensing matrix. As such, the waveform orthogonality between different transmit antennas is no longer required for virtual array derivation, since an augmented virtual array is derived along with the formulated virtual sensing matrix. Then, the subspace processing can be implemented on the virtual sensing matrix, and enhanced DOA estimation can be achieved with fully nonorthogonal waveforms. Simulation results demonstrate that the proposed method outperforms the existing methods in both estimation accuracy and angular resolution.

II. Joint Sensing and Communication System

We consider a joint sensing and communication system as shown in Fig. 1, where the transmitted waveforms are utilized for communication with mobile users, while the echoes reflected by non-cooperative targets are exploited for DOA estimation. The receive array contains N_r antennas whose inter-element spacing d_r equals to the half of the signal

This work was partially supported by the National Key R&D Program of China (No. 2018YFE0126300), the National Natural Science Foundation of China (No. U21A20456, 61901413), and the 5G Open Laboratory of Hangzhou Future Sci-Tech City.

Authorized licensed use limited to: Zhejiang University. Downloaded on September 24,2025 at 12:40:28 UTC from IEEE Xplore. Restrictions apply.

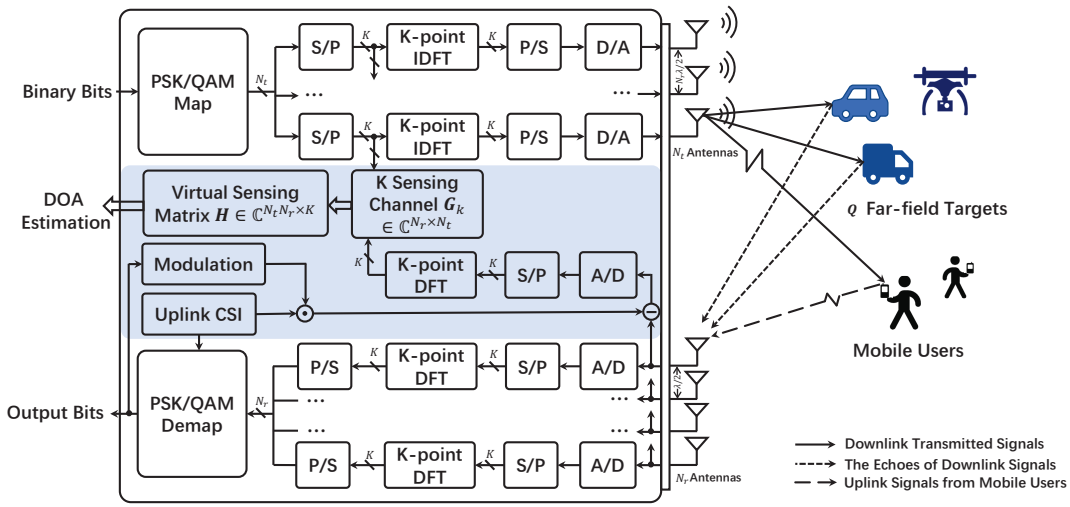

Fig. 1. Illustration of the joint sensing and communication system.

wavelength $\lambda = f_c/c$. Here, f_c denotes the carrier frequency, and c denotes the speed of light. The transmit array contains N_t antennas with inter-element spacing $d_t = N_r d_r$, following the array configuration of MIMO radar [24].

In the deployed system, orthogonal frequency-division multiplexing (OFDM) modulation format is employed, which has been widely used in wireless communication systems including 5G New Radio [25]. The baseband OFDM waveform of the n_t-th ($n_t = 0, 1, \cdots, N_t - 1$) transmit antenna in downlink communication can be formulated as

$$x_{n_t}(t) = \sum_{m=0}^{M-1} \sum_{k=0}^{K-1} s_{n_t}[k,m] e^{j2\pi k \Delta f t} \operatorname{rect}\left(\frac{t - mT}{T}\right), \quad (1)$$

where $s_{n_t}[k,m]$ is the modulated symbol (e.g., via phase-shift keying (PSK) or quadrature amplitude modulation (QAM)), Δf denotes the subcarrier spacing, $\operatorname{rect}(\cdot)$ denotes a rectangular pulse with duration $T = 1/\Delta f$, and $m = 0, 1, \cdots, M-1$ and $k = 0, 1, \cdots, K-1$ are the indices of OFDM symbol and subcarrier, respectively. Here, all the K subcarriers are utilized in the transmitted waveform $x_{n_t}(t)$ to enable a higher communication rate. However, this introduces nonorthogonality between waveforms of different transmit antennas, and thus the different symbols transmitted on the same subcarrier become inseparable. As such, the virtual array cannot be constructed directly by the received signals, limiting the performance of existing DOA estimation methods with virtual array derivation in such a system [26, 27].

Assume that there are Q far-field non-cooperative targets located at direction $\boldsymbol{\theta} = [\theta_1, \theta_2, \cdots, \theta_Q]^{\mathrm{T}}$, and that the receive array samples the uplink communication signals from mobile users and the signals reflected by the Q targets simultaneously. Here, $[\cdot]^{\mathrm{T}}$ represents the transpose operator. Since the uplink communication channel state information (CSI) can be obtained by pilot sequences and that the communication symbols can consequently be restored, the uplink communication signals can be extracted from the received baseband signals [28]. Thus, we only focus on the baseband waveforms reflected by targets. The received signals of the n_r-th ($n_r = 0, 1, \cdots, N_r - 1$) antenna can be formulated as

$$y_{n_r}(t) = \sum_{q=1}^{Q} \sum_{n_t=0}^{N_t-1} \beta_q x_{n_t}\left(t - \tau_{n_t,n_r,q}\right) + n(t), \quad (2)$$

where β_q denotes the attenuation coefficient, $\tau_{n_t,n_r,q} = 2R_q/c + (n_r d_r + n_t d_t)\sin\theta_q/c$ represents the propagation delay, R_q is the distance between the system and the q-th target, and $n(t)$ is the additive Gaussian white noise.

III. Proposed DOA Estimation Method for Nonorthogonal Waveforms

In this section, we propose a virtual sensing matrix-based DOA estimation method for joint sensing and communication system, where the formulated nonorthogonal signal model for maintaining communication rate is considered.

To resolve signals transmitted on different subcarriers, each receive antenna samples the sensing signals $y_{n_r}(t)$ at $t = mT + k\frac{T}{K}$, which yields a set of K values $\boldsymbol{y}_{n_r}[m]$ for the m-th OFDM symbol. After that, K-point discrete Fourier transform (DFT) is performed on $\boldsymbol{y}_{n_r}[m]$ to obtain the demodulated symbols. Then, the m-th symbol on the k-th subcarrier of the n_r-th receive antenna can be represented as

$$d_{n_r}[k,m] = \sum_{q=1}^{Q} \sum_{n_t=0}^{N_t-1} g_{k,n_t,n_r,q} s_{n_t}[k,m] + n_{n_r}[k,m], \quad (3)$$

where

$$g_{k,n_t,n_r,q} = \beta_q e^{-j2\pi(n_r d_r + n_t d_t)\frac{\sin\theta_q}{\lambda}} e^{-j2\pi k \Delta f \frac{2R_q}{c}} \quad (4)$$

is the sensing channel coefficient depicting the attenuation and propagation delay. Here, the approximation $\lambda = \frac{c}{f_c} \approx \frac{c}{f_c + k\Delta f}$ is made since that $\Delta f \ll f_c$ holds in the considered millimeter

Authorized licensed use limited to: Zhejiang University. Downloaded on September 24,2025 at 12:40:28 UTC from IEEE Xplore. Restrictions apply.

wave scenario. By stacking the demodulated symbols into a vector $\boldsymbol{d}[k,m]=[d_0[k,m],\cdots,d_{N_r-1}[k,m]]^{\mathrm{T}}$, we have

$$\boldsymbol{d}[k,m]=\boldsymbol{G}_k\boldsymbol{s}[k,m]+\boldsymbol{n}[k,m], \tag{5}$$

where

$$\boldsymbol{G}_k=\begin{bmatrix} \sum_{q=1}^{Q} g_{k,0,0,q} & \sum_{q=1}^{Q} g_{k,1,0,q} & \cdots & \sum_{q=1}^{Q} g_{k,N_t-1,0,q} \\ \sum_{q=1}^{Q} g_{k,0,1,q} & \sum_{q=1}^{Q} g_{k,1,1,q} & \cdots & \sum_{q=1}^{Q} g_{k,N_t-1,1,q} \\ \vdots & \vdots & \ddots & \vdots \\ \sum_{q=1}^{Q} g_{k,0,N_r-1,q} & \sum_{q=1}^{Q} g_{k,1,N_r-1,q} & \cdots & \sum_{q=1}^{Q} g_{k,N_t-1,N_r-1,q} \end{bmatrix} \tag{6}$$

is the sensing channel matrix of the k-th subcarrier, $\boldsymbol{s}[k,m]=[s_0[k,m],\cdots,s_{N_t-1}[k,m]]^{\mathrm{T}}$ denotes the transmitted modulated symbol vector, and $\boldsymbol{n}[k,m]\sim\mathcal{CN}\left(\boldsymbol{0},\sigma_n^2\boldsymbol{I}\right)$ is the additive white Gaussian noise vector with $\boldsymbol{0}$ being the zero matrix and $\boldsymbol{I}$ being the identity matrix. By subtituting (4) into (6), the sensing channel matrix can be reformulated as

$$\boldsymbol{G}_k=\boldsymbol{A}_r\boldsymbol{E}_k\boldsymbol{B}\boldsymbol{A}_t^{\mathrm{T}}, \tag{7}$$

where $\boldsymbol{E}_k=\mathrm{diag}(e^{-j2\pi k\Delta f\frac{2R_1}{c}},\cdots,e^{-j2\pi k\Delta f\frac{2R_Q}{c}})$ is the propagation delay of the k-th subcarrier, $\mathrm{diag}(\cdot)$ denotes the diagonal matrix, $\boldsymbol{B}=\mathrm{diag}(\beta_1,\cdots,\beta_Q)$ is the attenuation during the transmission,

$$\boldsymbol{A}_t(\boldsymbol{\theta})=[\boldsymbol{a}_t\left(\theta_1\right),\boldsymbol{a}_t\left(\theta_2\right),\cdots,\boldsymbol{a}_t\left(\theta_Q\right)] \tag{8}$$

and

$$\boldsymbol{A}_r(\boldsymbol{\theta})=[\boldsymbol{a}_r\left(\theta_1\right),\boldsymbol{a}_r\left(\theta_2\right),\cdots,\boldsymbol{a}_r\left(\theta_Q\right)] \tag{9}$$

are transmit and receive array steering matrices with

$$\begin{aligned} \boldsymbol{a}_t\left(\theta_q\right)&=\left[1,e^{-j\frac{2\pi}{\lambda}d_t\sin\theta q},\cdots,e^{-j\frac{2\pi}{\lambda}(N_t-1)d_t\sin\theta q}\right]^{\mathrm{T}},\\ \boldsymbol{a}_r\left(\theta_q\right)&=\left[1,e^{-j\frac{2\pi}{\lambda}d_r\sin\theta q},\cdots,e^{-j\frac{2\pi}{\lambda}(N_r-1)d_r\sin\theta q}\right]^{\mathrm{T}} \end{aligned} \tag{10}$$

being the steering vectors, respectively. To construct a virtual array for DOA estimation, the sensing channel matrix $\boldsymbol{G}_k$ is vectorized as

$$\begin{aligned} \boldsymbol{h}_k&=\mathrm{vec}(\boldsymbol{G}_k)\\ &=\mathrm{vec}\left(\sum_{q=1}^{Q}\beta_q e^{-j2\pi k\Delta f\frac{2R_q}{c}}\boldsymbol{a}_r\left(\theta_q\right)\boldsymbol{a}_t^{\mathrm{T}}\left(\theta_q\right)\right)\\ &=\boldsymbol{A}_{\mathbb{S}}(\theta_0,\cdots,\theta_{Q-1})\boldsymbol{B}\boldsymbol{e}_k, \end{aligned} \tag{11}$$

where $\boldsymbol{e}_k=[e^{-j2\pi k\Delta f\frac{2R_1}{c}},\cdots,e^{-j2\pi k\Delta f\frac{2R_Q}{c}}]^{\mathrm{T}}$ represents the delay vector,

$$\boldsymbol{A}_{\mathbb{S}}(\boldsymbol{\theta})=[\boldsymbol{a}_{\mathbb{S}}\left(\theta_1\right),\boldsymbol{a}_{\mathbb{S}}\left(\theta_2\right),\cdots,\boldsymbol{a}_{\mathbb{S}}\left(\theta_Q\right)] \tag{12}$$

is the steering matrix of the virtual sensing array $\mathbb{S}$ of size N_tN_r with

$$\begin{aligned} \boldsymbol{a}_{\mathbb{S}}\left(\theta_q\right)&=\boldsymbol{a}_t\left(\theta_q\right)\otimes\boldsymbol{a}_r\left(\theta_q\right)\\ &=\left[1,e^{-j\frac{2\pi}{\lambda}d_r\sin\theta_q},\cdots,e^{-j\frac{2\pi}{\lambda}(N_tN_r-1)d_r\sin\theta_q}\right]^{\mathrm{T}} \end{aligned} \tag{13}$$

being its steering vector, and $\otimes$ denotes Kronecker product.

By exploiting the sensing channel matrices estimated on all the K subcarriers, the virtual sensing matrix $\boldsymbol{H}\in\mathbb{C}^{N_tN_r\times K}$ can be obtained as

$$\boldsymbol{H}=[\boldsymbol{h}_0,\boldsymbol{h}_1,\cdots,\boldsymbol{h}_{K-1}]=\boldsymbol{A}_{\mathbb{S}}\boldsymbol{B}\boldsymbol{E}, \tag{14}$$

where $\boldsymbol{E}=[\boldsymbol{e}_0,\boldsymbol{e}_1,\cdots,\boldsymbol{e}_{K-1}]$ is the prorogation delay matrix. Herein, we find that $\boldsymbol{H}$ can be regarded as an equivalent first-order observation matrix of a virtual sensing array, with $\boldsymbol{A}_{\mathbb{S}}$ being the virtual receive array steering matrix and $\boldsymbol{B}\boldsymbol{E}\in\mathbb{C}^{Q\times K}$ being the equivalent signal matrix. Specifically, the number of subcarriers K corresponds to the number of snapshots in general narrowband DOA estimation model. Consequently, the equivalent second-order observation matrix can be constructed as

$$\boldsymbol{\Gamma}=\frac{1}{K}\sum_{k=0}^{K-1}\boldsymbol{h}_k\boldsymbol{h}_k^{\mathrm{H}}=\frac{1}{K}\boldsymbol{H}\boldsymbol{H}^{\mathrm{H}}, \tag{15}$$

where $[\cdot]^{\mathrm{H}}$ denotes the Hermitian transpose operator. To achieve DOA estimation of targets, eigen-decomposition can be performed on $\boldsymbol{\Gamma}$ as $\boldsymbol{\Gamma}=\boldsymbol{U}\boldsymbol{\Sigma}\boldsymbol{U}^{\mathrm{H}}$, where $\boldsymbol{\Sigma}$ is the diagonal matrix with eigenvalues, and $\boldsymbol{U}$ is the matrix with corresponding orthogonal eigenvectors. Since there are Q non-zero eigenvalues in $\boldsymbol{\Sigma}$, the matrix $\boldsymbol{U}$ can be expressed as $\boldsymbol{U}=[\boldsymbol{U}_1\ \boldsymbol{U}_2]$, where $\boldsymbol{U}_1\in\mathbb{C}^{N_tN_r\times Q}$ contains Q eigenvectors corresponding to the non-zero eigenvalues, while $\boldsymbol{U}_2\in\mathbb{C}^{N_tN_r\times(N_tN_r-Q)}$ contains the eigenvectors corresponding to zero eigenvalues. Then, the DOA estimation of targets can be achieved by peak searching in the following pseudo-spectrum

$$P(\theta)=\frac{1}{\boldsymbol{a}_{\mathbb{S}}^H(\theta)\boldsymbol{U}_2\boldsymbol{U}_2^{\mathrm{H}}\boldsymbol{a}_{\mathbb{S}}(\theta)}. \tag{16}$$

It is noted that, the theoretical sensing channel $\boldsymbol{G}_k$ (7) cannot be obtained in practice. However, since all the transmitted symbols can be utilized as a *prior* information, the estimation of $\boldsymbol{G}_k$ can be obtained via a least square solver as

$$\hat{\boldsymbol{G}}_k=\boldsymbol{D}_k\boldsymbol{S}_k^{\mathrm{H}}\left(\boldsymbol{S}_k\boldsymbol{S}_k^{\mathrm{H}}\right)^{-1}, \tag{17}$$

where $\boldsymbol{D}_k=[\boldsymbol{d}[k,0],\boldsymbol{d}[k,1],\cdots\boldsymbol{d}[k,M-1]]$ denotes the demodulated symbol matrix, and $\boldsymbol{S}_k=[\boldsymbol{s}[k,0],\boldsymbol{s}[k,1],\cdots,\boldsymbol{s}[k,M-1]]$ denotes the transmitted modulated symbol matrix. Then, by substituting $\hat{\boldsymbol{G}}_k$ into the process (11) $\sim$ (16), DOA estimation under fully nonorthogonality scenario can be achieved.

IV. Simulation Results

In this section, the effectiveness of the proposed DOA estimation method is validated via simulations. The quadrature phase shift keying (QPSK) modulation is employed, and the system parameters are listed in Table I, where the subcarrier spacing and the carrier frequency obey the standard 38.101-1 of 3rd Generation Partnership Project (3GPP) for 5G wireless communication [29]. All the targets are characterized by (distance, angle, attenuation coefficient). The proposed method is compared to the MUSIC-based method [23], the interleaving frame structure-based method [18] and the SSR-based method

Authorized licensed use limited to: Zhejiang University. Downloaded on September 24,2025 at 12:40:28 UTC from IEEE Xplore. Restrictions apply.

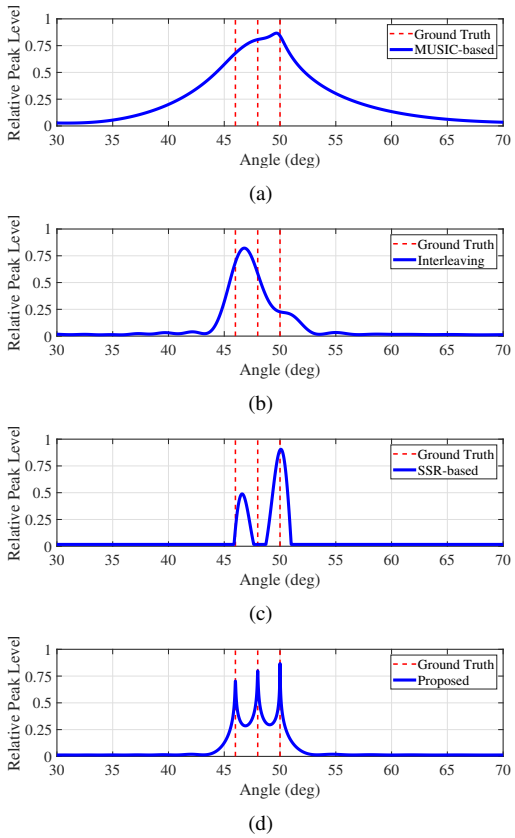

Fig. 2. DOA estimation resolution comparison when SNR = 30 dB. (a) MUSIC-based method [23]; (b) Interleaving OFDM frame structure-based method [18]; (c) The SSR-based method [22]; (d) The proposed method.

TABLE I
SYSTEM PARAMETERS

Parameter	Symbol	Value
Number of transmit antennas	N_t	4
Number of receive antennas	N_r	16
Transmit antenna spacing	d_t	8λ
Receive antenna spacing	d_r	0.5λ
Carrier frequency	f_c	28 GHz
Subcarrier spacing	Δf	60 kHz
Number of OFDM subcarriers	K	32
Number of OFDM symbols	M	100

[22]. For all the evaluated methods, the spatial sampling grid interval is set to $0.01°$.

In Fig. 2, we assume that there are three far-field targets located respectively at $(50\text{m}, 46°, 0.1)$, $(100\text{m}, 48°, 0.2)$, and $(80\text{m}, 50°, 0.3)$, where the SNR is set to 30 dB. It is clear that, the compared methods fail to distinguish all the three targets while the proposed method accurately estimates all the three DOAs. This is because the virtual array derivation is not considered in the MUSIC-based method. Moreover,

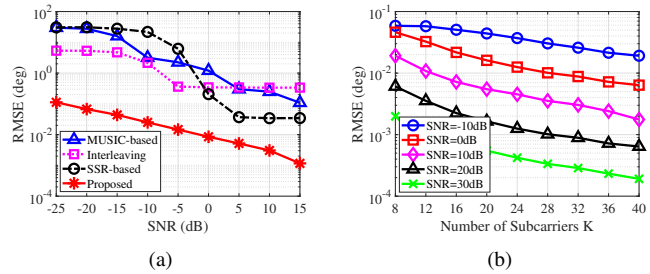

Fig. 3. DOA estimation accuracy comparison for the joint sensing and communication system. (a) RMSE versus SNR; (b) RMSE versus the number of subcarriers.

the elements of virtual arrays derived in the interleaving frame structure-based method and the SSR-based method are deviated due to the difference of propagation delays of various subcarriers. In contrast, in the proposed method, the virtual sensing matrix is constructed from the estimated sensing channel of each subcarrier in a fully nonorthogonal scenario. Thus, the propagation delays for the elements in each column of the virtual sensing matrix are consistent.

Then, the DOA estimation accuracy is compared in Fig. 3. Two targets located at $(100\text{m}, \theta_1, 0.1)$ and $(50\text{m}, \theta_2, 0.1)$ are considered, where θ_1 and θ_2 are assumed to be uniformly distributed within $[20°, 60°]$. The root-mean-square error (RMSE)

$$\text{RMSE} = \sqrt{\frac{1}{LQ}\sum_{l=1}^{L}\sum_{q=1}^{Q}\left(\theta_{q,l} - \hat{\theta}_{q,l}\right)^2} \tag{18}$$

is defined as the performance metric, where $L = 500$ denotes the number of Monte-Carlo trials, $\theta_{q,l}$ denotes the angle of the q-th target in the l-th trial, and $\hat{\theta}_{q,l}$ is its estimation. In Fig. 3(a), the proposed method outperforms all the compared methods, since more transmitted symbols can be effectively utilized as prior information in the proposed method thanks to the deployment of the nonorthogonal signal model. Moreover, the accuracy of the DOA estimation increases as more subcarriers are utilized in the proposed method as shown in Fig. 3(b), which is similar to the impact of the number of snapshots on subspace-based DOA estimation methods.

V. CONCLUSIONS

A virtual sensing matrix-based DOA estimation method with fully nonorthogonal waveforms is proposed for joint sensing and communication system to maintain high communication rate. The virtual sensing matrix is formulated from the estimated sensing channels as equivalent first-order observation data of an augmented virtual array. Based on which, the subspace processing is exploited to perform DOA estimation of targets. Simulation results validate the superiority of the proposed method over existing methods.

Authorized licensed use limited to: Zhejiang University. Downloaded on September 24,2025 at 12:40:28 UTC from IEEE Xplore. Restrictions apply.

REFERENCES

[1] H. L. Van Trees, *Detection, Estimation, and Modulation Theory, Part IV: Optimum Array Processing*. New York, NY: John Wiley & Sons, 2002.

[2] Y. Gu and A. Leshem, "Robust adaptive beamforming based on interference covariance matrix reconstruction and steering vector estimation," *IEEE Trans. Signal Process.*, vol. 60, no. 7, pp. 3881–3885, July 2012.

[3] S. Qin, Y. D. Zhang, and M. G. Amin, "Generalized coprime array configurations for direction-of-arrival estimation," *IEEE Trans. Signal Process.*, vol. 63, no. 6, pp. 1377–1390, Mar. 2015.

[4] H. Zheng, Z. Shi, C. Zhou, M. Haardt, and J. Chen, "Coupled coarray tensor CPD for DOA estimation with coprime L-shaped array," *IEEE Signal Process. Lett.*, vol. 28, pp. 1545–1549, July 2021.

[5] C. Zhou, Y. Gu, S. He, and Z. Shi, "A robust and efficient algorithm for coprime array adaptive beamforming," *IEEE Trans. Veh. Technol.*, vol. 67, no. 2, pp. 1099–1112, Feb. 2018.

[6] F. Liu, Y. Cui, C. Masouros, J. Xu, T. X. Han, Y. C. Eldar, and S. Buzzi, "Integrated sensing and communications: Toward dual-functional wireless networks for 6G and beyond," *IEEE J. Sel. Areas Commun.*, vol. 40, no. 6, pp. 1728–1767, June 2022.

[7] A. Hassanien, M. G. Amin, Y. D. Zhang, and F. Ahmad, "Dual-function radar-communications: Information embedding using sidelobe control and waveform diversity," *IEEE Trans. Signal Process.*, vol. 64, no. 8, pp. 2168–2181, Apr. 2016.

[8] D. Ma, N. Shlezinger, T. Huang, Y. Shavit, M. Namer, Y. Liu, and Y. C. Eldar, "Spatial modulation for joint radar-communications systems: Design, analysis, and hardware prototype," *IEEE Trans. Veh. Technol.*, vol. 70, no. 3, pp. 2283–2298, Mar. 2021.

[9] J. A. Zhang, F. Liu, C. Masouros, R. W. Heath, Z. Feng, L. Zheng, and A. Petropulu, "An overview of signal processing techniques for joint communication and radar sensing," *IEEE J. Sel. Topics Signal Process.*, vol. 15, no. 6, pp. 1295–1315, Nov. 2021.

[10] C. Shi, F. Wang, M. Sellathurai, J. Zhou, and S. Salous, "Power minimization-based robust OFDM radar waveform design for radar and communication systems in coexistence," *IEEE Trans. Signal Process.*, vol. 66, no. 5, pp. 1316–1330, Mar. 2018.

[11] F. Liu, L. Zhou, C. Masouros, A. Li, W. Luo, and A. Petropulu, "Toward dual-functional radar-communication systems: Optimal waveform design," *IEEE Trans. Signal Process.*, vol. 66, no. 16, pp. 4264–4279, Aug. 2018.

[12] S. Zhang, A. Ahmed, Y. D. Zhang, and S. Sun, "Enhanced DOA estimation exploiting multi-frequency sparse array," *IEEE Trans. Signal Process.*, vol. 69, pp. 5935–5946, Oct. 2021.

[13] X. Wang and A. Hassanien, "Phase modulated communications embedded in correlated FH-MIMO radar waveforms," in *Proc. IEEE Radar Conf. (RadarConf)*, Florence, Italy, Sept. 2020, pp. 1–6.

[14] E. Björnson, J. Hoydis, and L. Sanguinetti, "Massive MIMO networks: Spectral, energy, and hardware efficiency," *Found. Trends Signal Process.*, vol. 11, no. 3-4, pp. 154–655, Nov. 2017.

[15] J. A. Zhang, M. L. Rahman, K. Wu, X. Huang, Y. J. Guo, S. Chen, and J. Yuan, "Enabling joint communication and radar sensing in mobile networks—A survey," *IEEE Commun. Surv. Tut.*, vol. 24, no. 1, pp. 306–345, Oct. 2022.

[16] M. L. Rahman, J. A. Zhang, X. Huang, Y. J. Guo, and R. W. Heath, "Framework for a perceptive mobile network using joint communication and radar sensing," *IEEE Trans. Aerosp. Electron. Syst.*, vol. 56, no. 3, pp. 1926–1941, June 2020.

[17] L. Pucci, E. Matricardi, E. Paolini, W. Xu, and A. Giorgetti, "Performance analysis of joint sensing and communication based on 5G New Radio," in *Proc. IEEE Glob. Commun. Conf. (GLOBECOM)*, Madrid, Spain, Dec. 2021, pp. 1–6.

[18] Y. L. Sit, C. Sturm, J. Baier, and T. Zwick, "Direction of arrival estimation using the MUSIC algorithm for a MIMO OFDM radar," in *Proc. IEEE Radar Conf. (RadarConf)*, Atlanta, GA, May 2012, pp. 226–229.

[19] C. Zhou, Y. Gu, Y. D. Zhang, Z. Shi, T. Jin, and X. Wu, "Compressive sensing-based coprime array direction-of-arrival estimation," *IET Commun.*, vol. 11, no. 11, pp. 1719–1724, Aug. 2017.

[20] X. Wu, "Localization of far-field and near-field signals with mixed sparse approach: A generalized symmetric arrays perspective," *Signal Process.*, vol. 175, p. 107665, Oct. 2020.

[21] C. Zhou, Y. Gu, X. Fan, Z. Shi, G. Mao, and Y. D. Zhang, "Direction-of-arrival estimation for coprime array via virtual array interpolation," *IEEE Trans. Signal Process.*, vol. 66, no. 22, pp. 5956–5971, Nov. 2018.

[22] Z. Xu and A. Petropulu, "A wideband dual function radar communication system with sparse array and OFDM waveforms," *arXiv:2106.05878*, June 2021.

[23] S. D. Liyanaarachchi, C. Baquero Barneto, T. Riihonen, M. Heino, and M. Valkama, "Range–angle processing for target detection in joint MIMO-OFDM communications and sensing," in *Proc. IEEE Workshop Signal Process. Adv. Wireless Commun. (SPAWC)*, Lucca, Italy, Sept. 2021, pp. 486–490.

[24] J. Li and P. Stoica, *MIMO Radar Signal Processing*. New York, NY: John Wiley & Sons, 2008.

[25] G. Stuber, J. Barry, S. McLaughlin, Y. Li, M. Ingram, and T. Pratt, "Broadband MIMO-OFDM wireless communications," *Proc. IEEE*, vol. 92, no. 2, pp. 271–294, Feb. 2004.

[26] Z. Shi, C. Zhou, Y. Gu, N. A. Goodman, and F. Qu, "Source estimation using coprime array: A sparse reconstruction perspective," *IEEE Sensors J.*, vol. 17, no. 3, pp. 755–765, Feb. 2017.

[27] H. Zheng, C. Zhou, Z. Shi, and A. L. F. de Almeida, "SubTTD: DOA estimation via sub-nyquist tensor train decomposition," *IEEE Signal Process. Lett.*, vol. 29, pp. 1978–1982, Aug. 2022.

[28] M. Temiz, E. Alsusa, and L. Danoon, "A receiver architecture for dual-functional massive MIMO OFDM RadCom systems," in *Proc. IEEE Int. Conf. Commun. (ICC)*, Dublin, Ireland, June 2020, pp. 1–6.

[29] 3GPP, "NR; User Equipment (UE) radio transmission and reception; Part 1: Range 1 Standalone," 3rd Generation Partnership Project (3GPP), Technical Specification (TS) 38.101-1, Oct. 2021, version 17.3.0. [Online]. Available: http://www.3gpp.org/DynaReport/38101-1.htm

Authorized licensed use limited to: Zhejiang University. Downloaded on September 24,2025 at 12:40:28 UTC from IEEE Xplore. Restrictions apply.