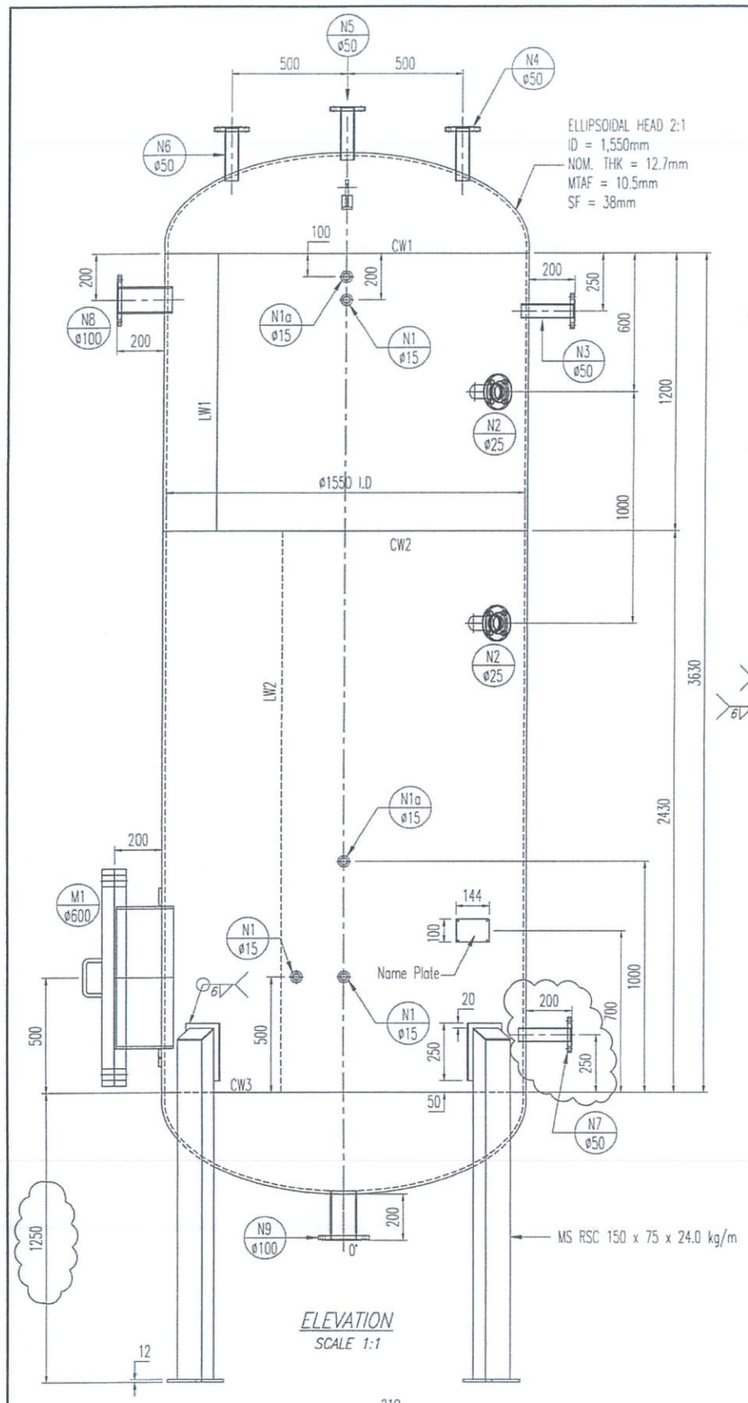


ELEVATION
SCALE 1:1

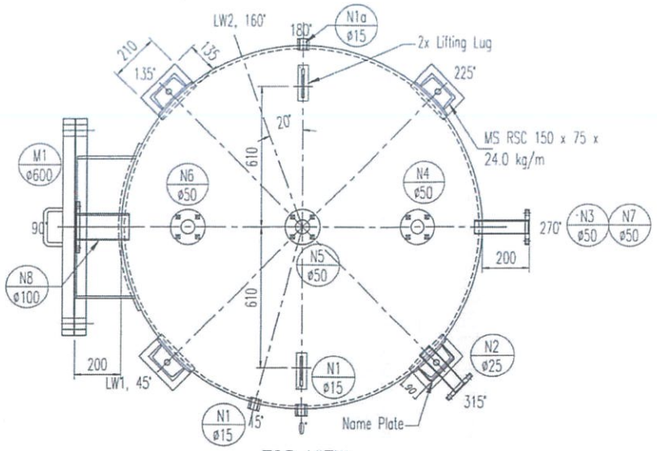


TOP VIEW
SCALE 1:1

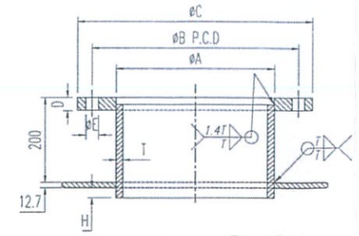


DETAIL OF FLANGE
SCALE 1:2.5

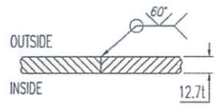


( SECOND SIDE CHIPPED OUT TO SOUND METAL )

PREPARATION FOR SAW & FCAW
MJE-A-0-N-3 : SAW
MJE-A-0-N-8 : FCAW

DETAIL OF CIRCUMFERENCIAL & LONGITUDINAL BUTT WELD
SCALE 1:5

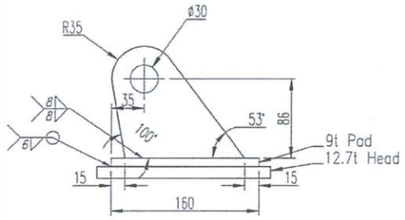


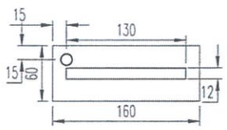


DETAIL OF LIFTING LUGS
SCALE 1:4

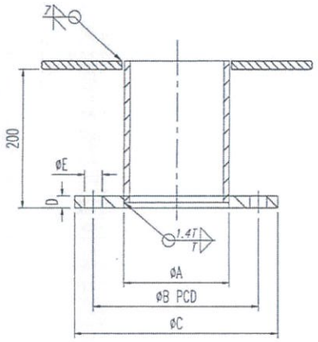


DETAIL OF WATER OUTLET FLANGE (N9)
SCALE 1:4

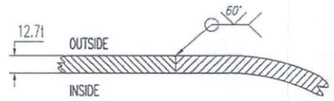


( SECOND SIDE CHIPPED OUT SOUND METAL BEFORE WELD )
PREPARATION FOR SMAW & SAW
MJE-A-0-N-2 : SMAW
MJE-A-0-N-3 : SAW

DETAIL OF SINGLE WELD BUTT JOINT
SCALE 1:5

Approved For Construction
Khalik
4/2/19

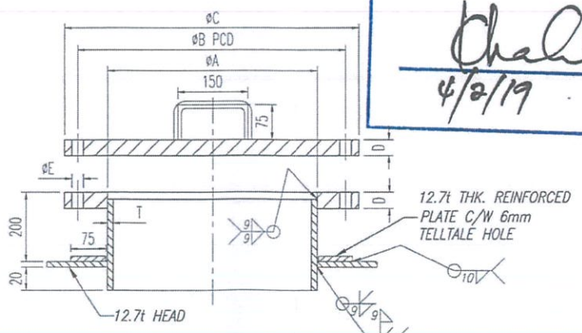


DETAIL OF ø600 MANHOLE FLANGE (M1)
SCALE 1:2

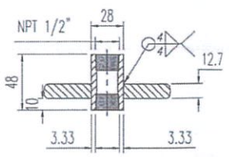


DETAIL OF ø15 SOCKET (N1)(N1a)
SCALE 1:5

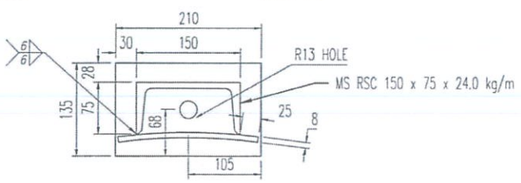


DETAIL OF BASEPLATE
SCALE 1:3

DIMENSION OF NOZZLE

| SIZE | øA | THICKNESS (T) | H | MATERIAL |
|---|---|---|---|---|
| ø25 | 33.4 | 4.55 MM | 10 MM | SA.106 GR.B SCH.80 PIPE |
| ø50 | 60.3 | 5.54 MM | 10 MM | SA.106 GR.B SCH.80 PIPE |
| ø100 | 114.3 | 6.02 MM | 15 MM | SA.106 GR.B SCH.40 PIPE |
| ø600 | 609.6 | 12.70 MM | 20 MM | SA.516 GR.70 PLAIN PLATE |

B16.5 ANSI CLASS 150

| NOMINAL SIZE | OUTSIDE DIAMETER, C | BOLTS CIRCLE DIAMETER, B | THICKNESS OF FLANGE, D | HOLE DIA, E | BOLT SIZE | NO OF BOLTS |
|---|---|---|---|---|---|---|
| ø25 | 110 | 79.4 | 12.7 | 15.8 | M12 | 4 |
| ø50 | 150 | 120.7 | 17.5 | 19.0 | M16 | 4 |
| ø100 | 230 | 190.5 | 22.3 | 19.0 | M16 | 8 |
| ø600 | 815 | 749.3 | 48.0 | 35.0 | M32 | 20 |

NOTES

| No. | DATE | BY | AMENDMENTS |
|---|---|---|---|
| | | | |

NOTE :
1. All dimension in mm, unless otherwise stated.
2. All bolts and studholes shall straddle principle center line.
3. DN8 (3/8") tapped BSPT telltale hole shall be provided on all reinforced pad and saddle plates attached to outside of vessel.
4. All fillet weld and nozzle to shell weld shall be FCAW process.

MERGE JATI ENGINEERING SDN. BHD.
LOT 2828, JALAN KELKATI 32/168, OFF JALAN SRI GOMBOT BUKIT NAGA, SEKSYEN 32, 40460 SHAH ALAM, SELANGOR DARUL EHSAN.
TEL: 603-51671589 FAX: 603-51672568 E-MAIL: CONTACT@MERGEJATI.COM.MY

TYPE :
SERIAL No :
DESIGN PRESSURE :
TEST PRESSURE :
DESIGN TEMPERATURE :
N.T. DATE :
DESIGN CODE :
UNFIRED PRESSURE VESSEL

NOZZLE

| NOZZLE | NOZZLE SIZE: | NOZZLE SCH: | NOZZLE QTY: | FLANGE'S RATING | FLANGE'S TYPE | FUNTION OF NOZZLE |
|---|---|---|---|---|---|---|
| M1 | ø600 | PLATE | 1 | ANSI CLASS 150 | SLIP ON | MANHOLE |
| N9 | ø100 | 40 | 1 | ANSI CLASS 150 | SLIP ON | WATER OUTLET |
| N8 | ø100 | 40 | 1 | ANSI CLASS 150 | SLIP ON | WATER INLET |
| N7 | ø50 | 80 | 1 | ANSI CLASS 150 | SLIP ON | WATER INLET |
| N6 | ø50 | 80 | 1 | ANSI CLASS 150 | SLIP ON | VAPOR OUTLET |
| N5 | ø50 | 80 | 1 | ANSI CLASS 150 | SLIP ON | VAPOR OUTLET |
| N4 | ø50 | 80 | 1 | ANSI CLASS 150 | SLIP ON | VAPOR OUTLET |
| N3 | ø50 | 80 | 1 | ANSI CLASS 150 | SLIP ON | WATER INLET |
| N2 | ø25 | 80 | 2 | ANSI CLASS 150 | SLIP ON | WATER INLET |
| N1a | ø15 | – | 2 | NPT 3000# | SOCKET | SPARE |
| N1 | ø15 | – | 3 | NPT 3000# | SOCKET | SPARE |

MATERIAL

| | | |
|---|---|---|
| SHELL & DISHED END | | A/SA 516 Gr.70 |
| FLANGE, MANHOLE FLANGE AND COVER | | A/SA 105 |
| PIPE | | A/SA 106 Gr.B (Sch40) & (Sch80) |
| SOCKET | | A/SA 105 |
| REINFORCED PLATE | | A/SA 516 Gr.70 |
| LEGS | | S275JR |
| BOLT & NUT | PRESSURE RETAINING | SA193 B7 / SA194 2H |
| | EXTERNAL FITTINGS | JIS G3507 |

SPECIFICATION

| | | | | |
|---|---|---|---|---|
| DESIGN CODE | | ASME SECT. VIII DIV 1 2017 | | |
| WORKING PRESSURE | | 1,000 kPaG | | |
| DESIGN PRESSURE | | 1,000 kPaG | | |
| HYDROSTATIC TEST PRESSURE | | 1,300 kPaG | | |
| WORKING TEMPERATURE | | 185° C | | |
| DESIGN TEMPERATURE | | 200° C | | |
| MDMT | | 0° C | | |
| MEDIUM OF SERVICE | | CONDENSATE | | |
| DEGREE OF N.D.T (FULL/SPOT/NONE W/DOUBLE/W/W) | | SHELL | DISHED END | OTHER |
| | | NIL | NIL | NIL |
| JOINT EFFICIENCY | | SHELL 0.7 (TABLE UW-12) | | |
| | | SEAMLESS HEAD 0.85 [UW-12(d)] | | |
| CORROSION ALLOWANCE | FOR HEAD & SHELL | 1 mm | | |
| | FOR NOZZLE | 1 mm | | |
| CAPACITY | | 7.84 $m^3$ | | |

DEPARTMENT OF OCCUPATIONAL SAFETY AND HEALTH MALAYSIA, CHOP & SIGNATURE

TITLE : GENERAL DETAIL OF CONDENSATE VESSEL ø1,550mm ID x 3,630mm HT

CLIENT : TOTALMECH ENGINEERING SDN. BHD.

END USER : MECHMAR COCHRAN BOILER (M) SDN. BHD.

MANUFACTURER :
MERGE JATI ENGINEERING SDN. BHD.
( COMPANY NO : 480344-A )
Lot. 2828, Jln. Kelkati 32/168, Off Jln Sri Gombot Bukit Naga, Seksyen 32, 40460 Shah Alam.
Tel: 603-51671589
Fax: 603-51672568
Email: contact@mergejati.com.my

| | | | |
|---|---|---|---|
| DESIGNED BY : | KHALIK | CHECKED BY : | SIEW |
| DRAWN BY : | RB | APPROVED BY : | SIEW |
| DATE : | NOV. 2018 | SCALE : | AS SHOWN |
| FILE NAME : | CS1550 | PROJECT CODE : | |
| DRAWING NO : | MJE/CV1550/3630/18-REV.1 | SHEET NO : | 1/1 |