US011366372B1

(12) **United States Patent**
Watts

(10) **Patent No.: US 11,366,372 B1**
(45) **Date of Patent: Jun. 21, 2022**

(54) **ROTATING CAMERA HEAD**

(71) Applicant: **Titus Gadwin Watts**, San Francisco, CA (US)

(72) Inventor: **Titus Gadwin Watts**, San Francisco, CA (US)

(*) Notice: Subject to any disclaimer, the term of this patent is extended or adjusted under 35 U.S.C. 154(b) by 0 days.

(21) Appl. No.: **17/175,242**

(22) Filed: **Feb. 12, 2021**

Related U.S. Application Data

(63) Continuation-in-part of application No. 16/877,183, filed on May 18, 2020, now Pat. No. 11,009,779.

(60) Provisional application No. 62/975,553, filed on Feb. 12, 2020.

(51) **Int. Cl.**
G03B 17/08 (2021.01)
G08B 13/196 (2006.01)
G03B 17/56 (2021.01)

(52) **U.S. Cl.**
CPC ***G03B 17/08*** (2013.01); ***G03B 17/561*** (2013.01); ***G08B 13/1963*** (2013.01)

(58) **Field of Classification Search**
CPC G08B 13/1963
See application file for complete search history.

(56) **References Cited**

U.S. PATENT DOCUMENTS

5,946,127 A * 8/1999 Nagata H04N 5/2259 310/90.5
6,879,082 B2 * 4/2005 Erten H02K 41/031 310/112
8,715,033 B2 * 5/2014 Smoot H04N 5/2251 446/131
8,767,120 B2 * 7/2014 Takizawa H04N 5/23264 348/208.7
9,090,214 B2 * 7/2015 Bernstein A63H 27/12
9,391,481 B2 * 7/2016 Kim H02K 5/04
10,372,021 B2 * 8/2019 Lenzo H04N 5/2252
2009/0297137 A1 * 12/2009 Entis G03B 17/02 396/428

* cited by examiner

Primary Examiner — Leon W Rhodes, Jr.
(74) *Attorney, Agent, or Firm* — Plager Schack LLP; Mark H. Plager; Eric Liou

(57) **ABSTRACT**

A rotating camera head is configured to protect cameras during inclement weather. The rotating camera head has a top plate joined to an inner semisphere outer surface and a camera mount. A bottom plate is joined to an inner semisphere inner surface and the camera mount with a plurality of long mount plate bolts and nuts. A rotator assembly is joined to an opening in the inner semisphere. A transparent sphere first side is arranged against a first metallic ball in the rotator assembly. A transparent sphere second side is arrange against a second metallic ball. A waterproof door is arranged on the transparent sphere. A camera is arranged within the transparent sphere. A plurality of cover panels is joined to the camera mount spacer and covering the rotator assembly. The plurality of cover panels protect the rotator assembly and the camera from inclement weather.

7 Claims, 5 Drawing Sheets

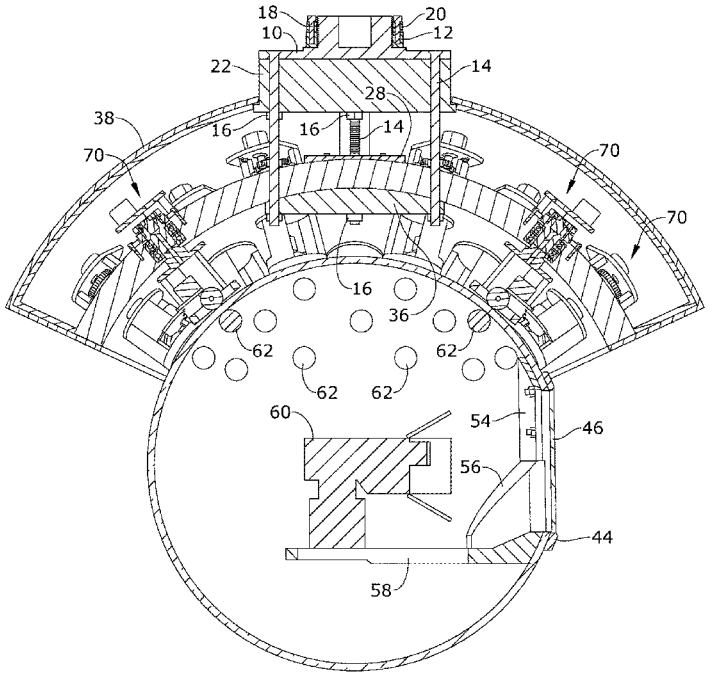

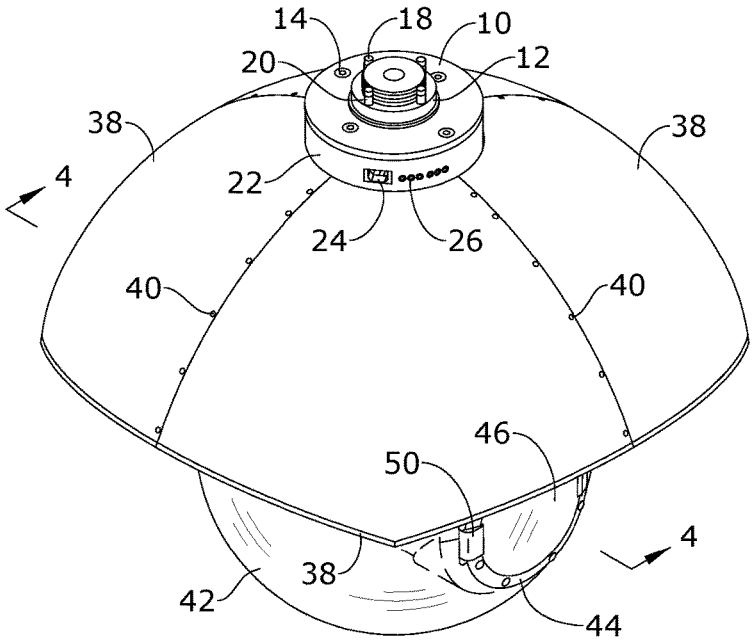
14
18
10
20
12
38
38
4
22
24
26
40
40
46
50
4
38
42
44

FIG.1

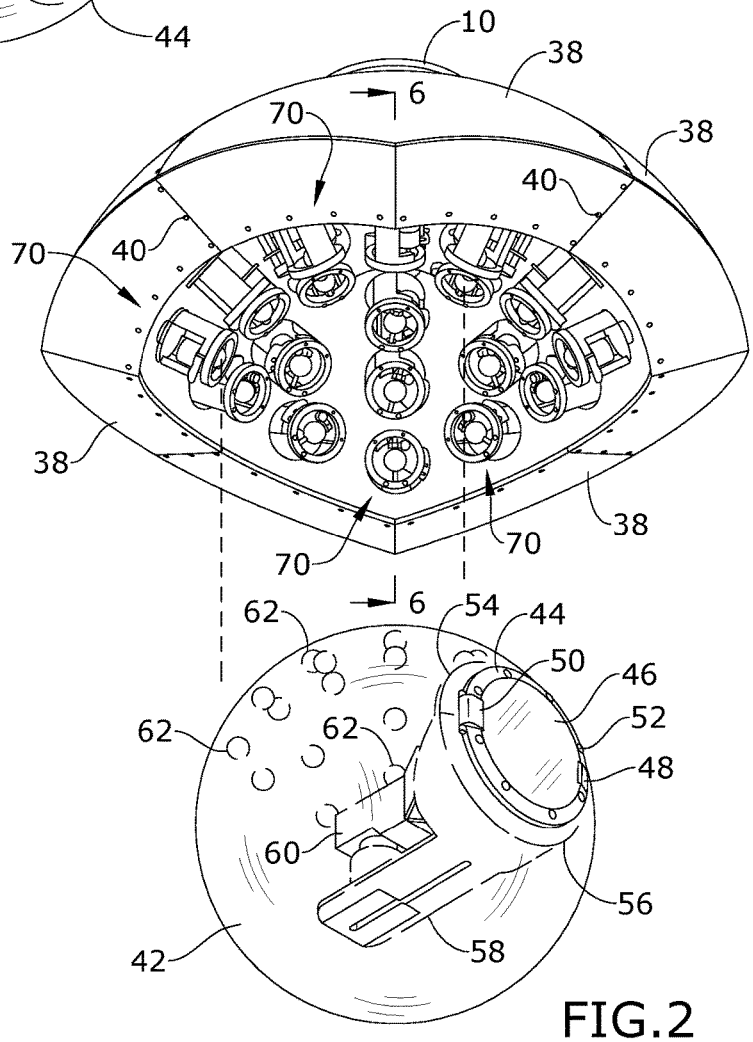
10
38
6
70
38
40
40
70
38
38
70
70
6
62
54
44
50
46
62
62
52
48
60
56
42
58

FIG.2

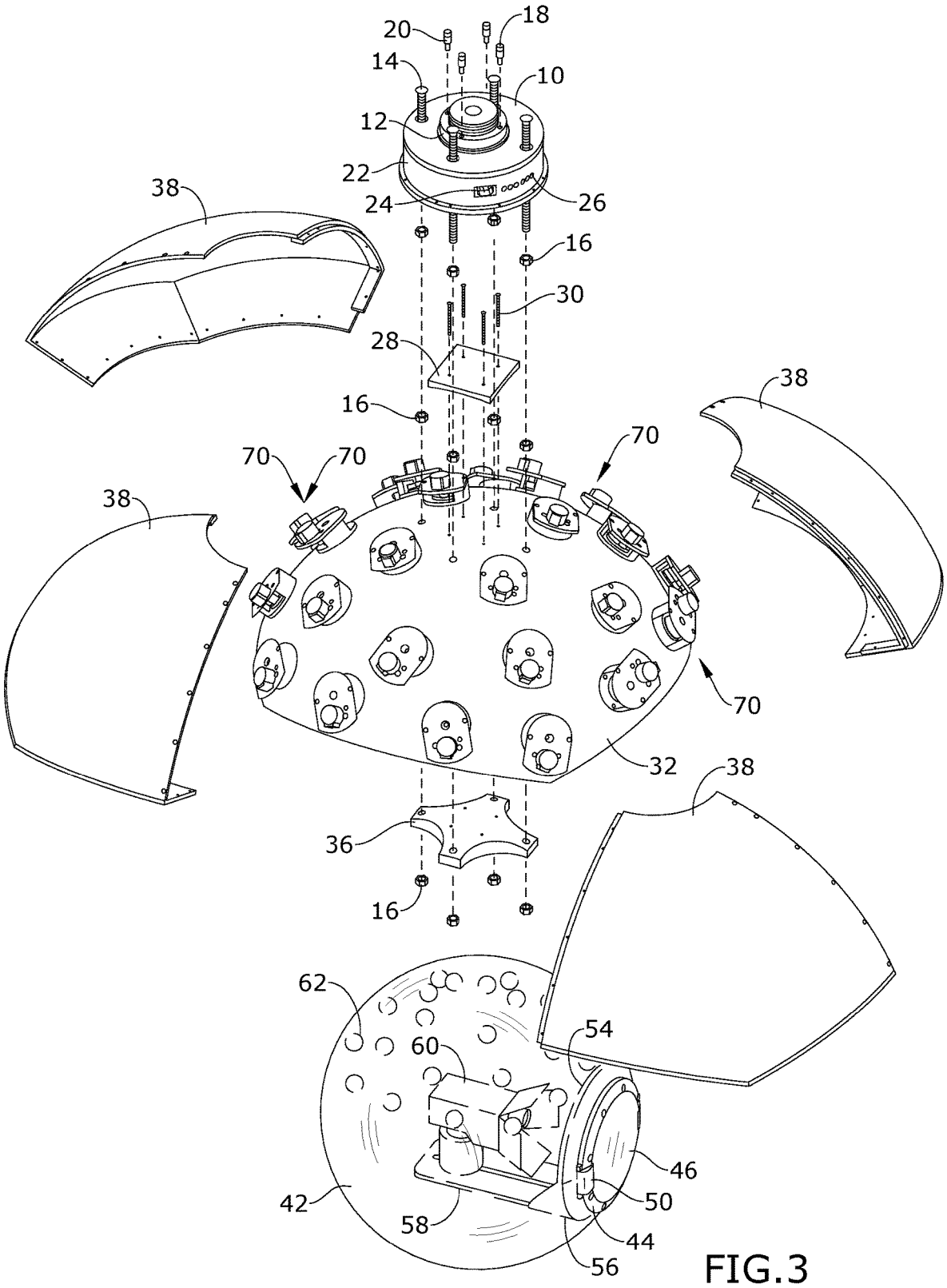
20
18
14
10
12
22
24
26
38
16
30
28
16
38
70
70
70
38
70
32
38
36
16
62
54
60
46
42
50
58
44
56

FIG.3

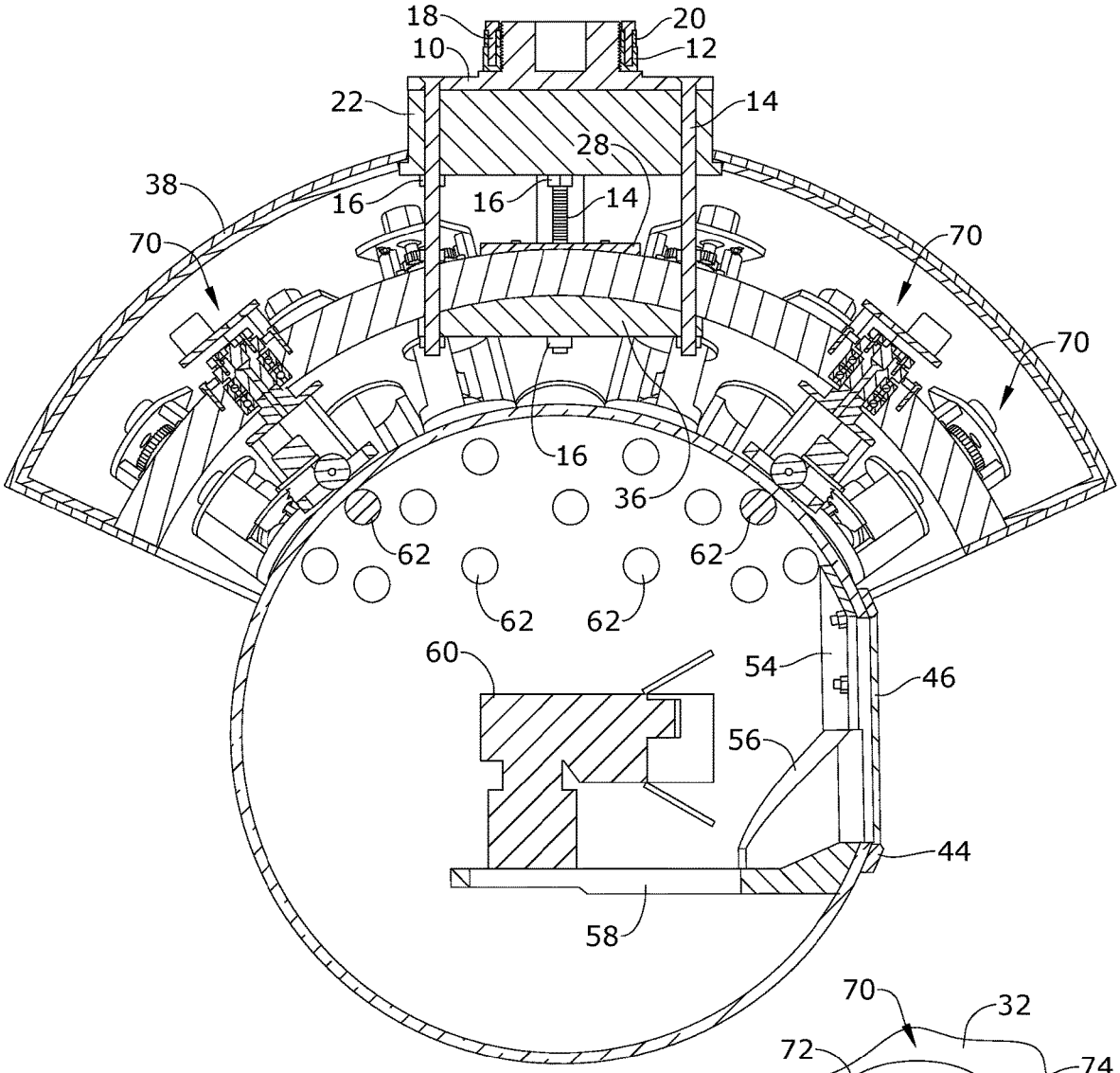
18
20
10
12
22
14
28
38
16
16
14
70
70
70
16
36
62
62
62
62
60
54
46
56
44
58

FIG.4

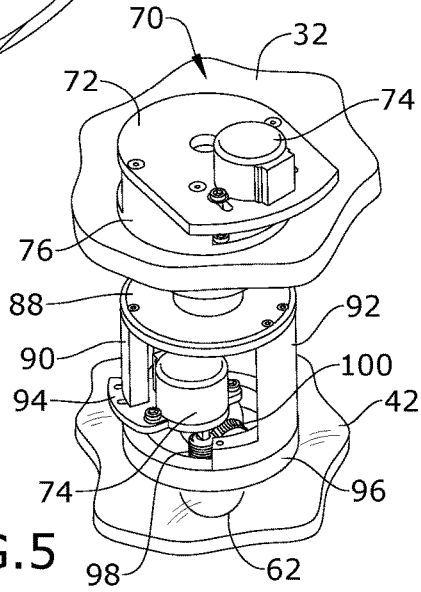
70
32
72
74
76
88
92
90
100
94
42
74
96
98
62

FIG.5

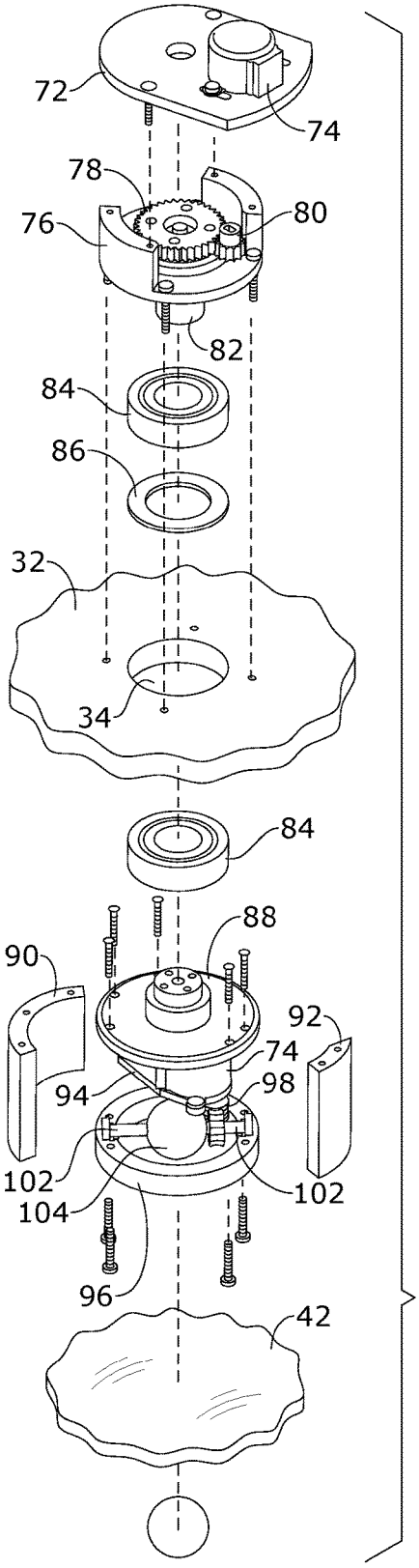
72
74
78
76
80
82
84
86
32
34
84
88
90
92
74
94
98
102
104
102
96
42

FIG.6

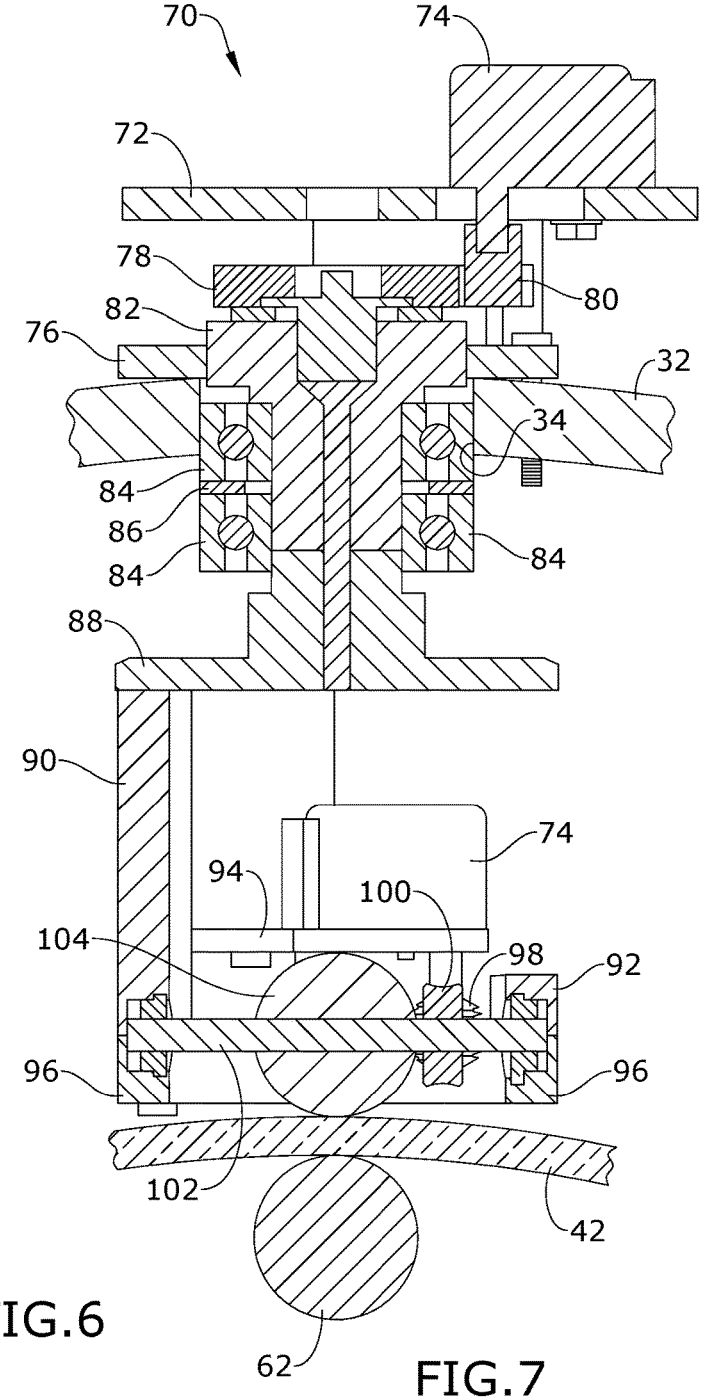
70
74
72
78
80
82
76
32
34
84
86
84
84
88
90
74
94
100
104
98
92
96
96
102
42
62

FIG.7

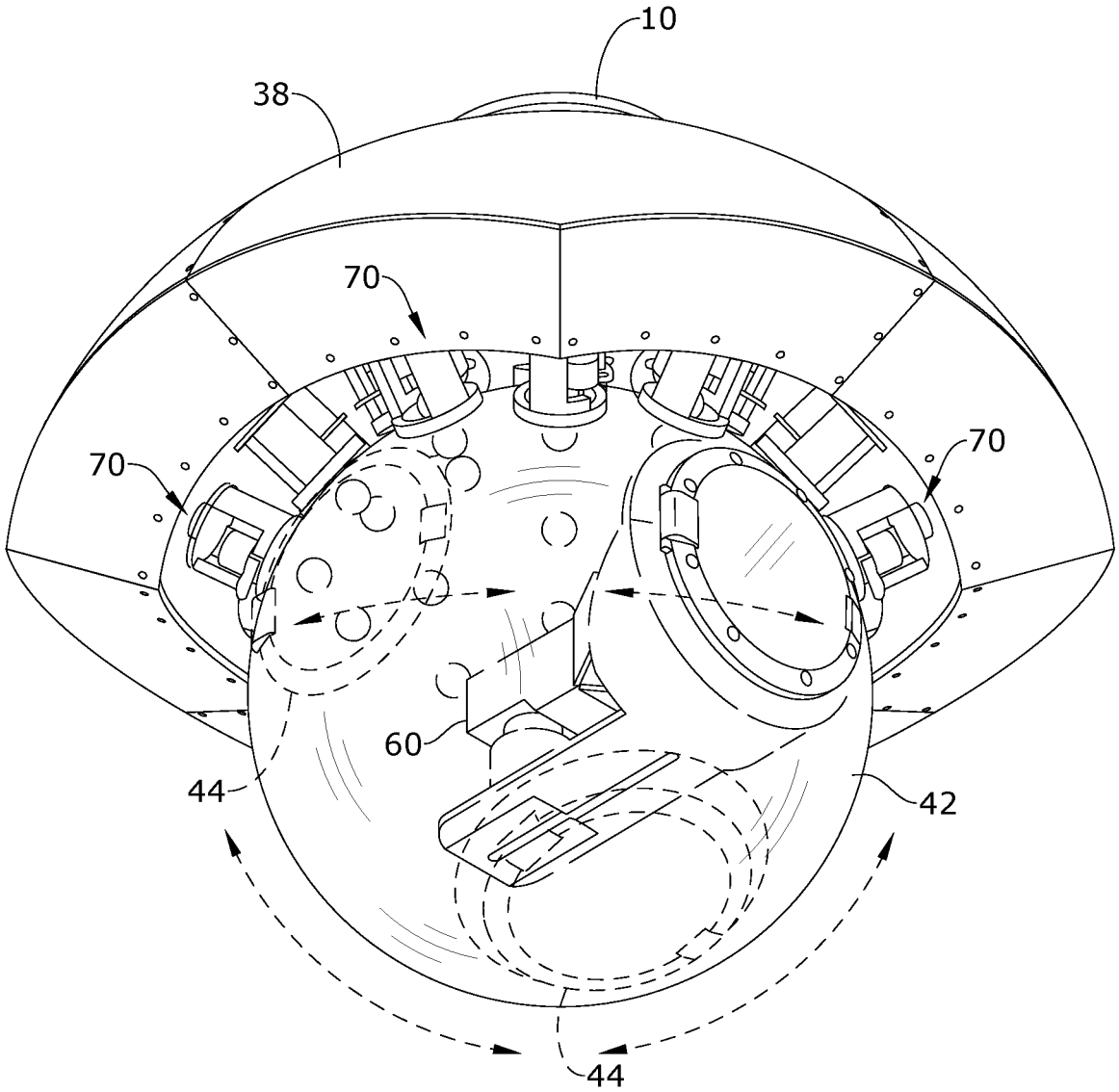

FIG.8

ROTATING CAMERA HEAD

RELATED APPLICATION

This application claims priority to provisional patent application U.S. Ser. No. 62/975,553 ("the '553 application") filed on Feb. 12, 2020.

This application is a continuation-in-part of non-provisional patent application U.S. Ser. No. 16/877,183 ("the '183 application") filed on May 18, 2020. The '183 application claims priority to provisional patent application U.S. Ser. No. 62/820,331 ("the '331 application") filed on Mar. 19, 2019.

The entire contents of the '553 application, the '183 application, and the '331 application are herein incorporated by reference.

BACKGROUND

The embodiments herein relate generally to camera technology.

Prior to embodiments of the disclosed invention, motion cameras were often outside in the elements. They were exposed to harsh weather that effects the camera parts and the footage that was taken. There was no protective covering for camera heads. Embodiments of the disclosed invention that solve that problem.

SUMMARY

A rotating camera head is configured to protect cameras during inclement weather. The rotating camera head has a top plate joined to an inner semisphere outer surface and a camera mount. A bottom plate is joined to an inner semisphere inner surface and the camera mount with a plurality of long mount plate bolts and nuts. A rotator assembly is joined to an opening in the inner semisphere. A transparent sphere first side is arranged against a first metallic ball in the rotator assembly. A transparent sphere second side is arrange against a second metallic ball. A waterproof door is arranged on the transparent sphere. A camera is arranged within the transparent sphere. A plurality of cover panels is joined to the camera mount spacer and covering the rotator assembly. The plurality of cover panels protect the rotator assembly and the camera from inclement weather.

BRIEF DESCRIPTION OF THE FIGURES

The detailed description of some embodiments of the invention is made below with reference to the accompanying figures, wherein like numerals represent corresponding parts of the figures.

FIG. **1** shows a top perspective view of one embodiment of the present invention;

FIG. **2** shows a bottom exploded perspective view of one embodiment of the present invention;

FIG. **3** shows a top exploded perspective view of one embodiment of the present invention;

FIG. **4** shows a section view of one embodiment of the present invention taken along line **4-4** in FIG. **1**;

FIG. **5** shows a detail view of one embodiment of the rotator assembly of the present invention;

FIG. **6** shows a detail exploded view of one embodiment of the rotator assembly of the present invention;

FIG. **7** shows a section view of one embodiment of the present invention taken along line **6-6** in FIG. **2**; and

FIG. **8** shows a perspective view of one embodiment of the present invention.

DETAILED DESCRIPTION OF CERTAIN EMBODIMENTS

By way of example, and referring to FIG. **1**, one embodiment of a rotating camera head comprises a camera mount plate **10** joined to a brass ring **12** with a plurality of long mount plate bolts **14**, nuts **16**, brass ring screws **18** and brass ring spacers **20**. A camera mount spacer **22** is adjacent to the brass ring **12** and further comprises an electrical plug **24** and data ports **26**.

A top plate **28** is attached to an inner semisphere **32** with a plurality of top plate bolts **30**. The camera mount spacer **22** is attached to the inner semisphere **32** with the plurality of long mount plate bolts **14** and nuts **16**. The inner semisphere **32** further comprises a plurality of rotator mounting holes **34**. A bottom plate **36** is attached to the inner semisphere **32** with the plurality of long mount plate bolts **14** and nuts **16**.

A plurality of quarter cover panels **38** is arranged immediately against the camera mount spacer **22** such that the plurality of quarter cover panels **38** cover the inner semisphere **32**. The plurality of quarter cover panels **38** is internally connected with quarter panel screws **40**.

A transparent sphere **42** is attached to a door **44** having a window **46** with a hinge **48** and a latch **50**. The door **44** is watertight and has an outer door ring attached to the transparent sphere **42** with a plurality of door ring bolts **52**. The door **44** further comprises an inner ring top **54** and an inner ring bottom **56**. The transparent sphere **42** is attached to a camera plate **58** that accommodates a camera **60**. A plurality of transparent surface magnetic balls **62** are arranged against an interior surface of the transparent sphere **42**.

A rotator assembly **70** is arranged through one of the plurality of rotator mounting holes **34**. The rotator assembly **70** further comprises a motor plate **72** joined to a motor **74** and a spacer ring **76**. The motor **74** has a shaft that mates with a pinion **80**. The pinion **80** turns a coupling **82**. The coupling **82** passes through a plurality of bearings **84** and a bearing ring **86**.

The plurality of bearings **84** is operatively coupled to a bearing assembly having a base plate **88** joined to a first bearing wall **90**, a second bearing wall **92** and a second motor **74**. The second motor is held in plate with a second motor bracket **94** and an end cap **96**. The second motor **74** has a shaft joined to a worm **98**. The worm **98** is mated to a worm gear **100** that is attached to a shaft **102**. The shaft **102** moves a ball **104**.

As used in this application, the term "a" or "an" means "at least one" or "one or more."

As used in this application, the term "about" or "approximately" refers to a range of values within plus or minus 10% of the specified number.

As used in this application, the term "substantially" means that the actual value is within about 10% of the actual desired value, particularly within about 5% of the actual desired value and especially within about 1% of the actual desired value of any variable, element or limit set forth herein.

All references throughout this application, for example patent documents including issued or granted patents or equivalents, patent application publications, and non-patent literature documents or other source material, are hereby incorporated by reference herein in their entireties, as though individually incorporated by reference, to the extent each reference is at least partially not inconsistent with the

disclosure in the present application (for example, a reference that is partially inconsistent is incorporated by reference except for the partially inconsistent portion of the reference).

A portion of the disclosure of this patent document contains material which is subject to copyright protection. The copyright owner has no objection to the facsimile reproduction by anyone of the patent document or the patent disclosure, as it appears in the Patent and Trademark Office patent file or records, but otherwise reserves all copyright rights whatsoever.

Any element in a claim that does not explicitly state "means for" performing a specified function, or "step for" performing a specified function, is not to be interpreted as a "means" or "step" clause as specified in 35 U.S.C. § 112, ¶6. In particular, any use of "step of" in the claims is not intended to invoke the provision of 35 U.S.C. § 112, ¶6.

Persons of ordinary skill in the art may appreciate that numerous design configurations may be possible to enjoy the functional benefits of the inventive systems. Thus, given the wide variety of configurations and arrangements of embodiments of the present invention the scope of the invention is reflected by the breadth of the claims below rather than narrowed by the embodiments described above.

What is claimed is:

1. A rotating camera head, configured to protect cameras during inclement weather; the rotating camera head comprising:

a top plate, joined to an inner semisphere outer surface and a camera mount with a plurality of top plate bolts;

a bottom plate, joined to an inner semisphere inner surface and the camera mount with a plurality of mount plate bolts and nuts;

a rotator assembly, joined to an opening in the inner semisphere;

a transparent sphere first side, arranged against a first magnetic ball in the rotator assembly;

a transparent sphere second side opposite the transparent sphere first side;

a second magnetic ball arranged against the transparent sphere second side opposite from the first magnetic ball;

a waterproof door arranged on the transparent sphere;

a camera arranged within the transparent sphere;

a plurality of cover panels, joined to the camera mount spacer and covering the rotator assembly;

wherein the plurality of cover panels protect the rotator assembly and the camera from inclement weather.

2. The rotating camera head of claim **1**, wherein the camera mount further comprises:

a camera mounting plate, joined to a brass ring with a plurality of brass ring screws and brass ring spacers;

a camera mount spacer, joined to the camera mounting place,

a plurality of ports and a plug arranged on the camera mount.

3. The rotating camera head of claim **2**, wherein the rotator assembly further comprises:

a motor plate joined to a motor,

a gear assembly joined to the motor plate with a spacer ring; the gear assembly further comprising a spur gear joined to a pinion; a coupling joined to a base ring with a first bearing, a second bearing and a bearing washer;

a base ring joined to a motor assembly, the motor assembly further comprising a first motor housing wall and a second motor housing wall; a bottom motor plate, joined to the first motor housing wall; an end cap, joined to the first motor housing wall and the second motor housing wall; a worm joined to a motor in the motor assembly, a worm gear, joined to a shaft passing through a first magnetic ball.

4. The rotating camera head of claim **2**, wherein the waterproof door further comprising: a waterproof door ring attached to the transparent sphere with a hinge and latch.

5. The rotating camera head of claim **2**, further comprising:

a camera plate arranged within the transparent sphere proximate the waterproof door.

6. The rotating camera head of claim **1**, wherein at least one of the first magnetic ball and the second magnetic ball is initially magnetically energized.

7. The rotating camera head of claim **1**, wherein at both of the first magnetic ball and the second magnetic ball are initially magnetically energized.

* * * * *