US 20120038901A1

(19) United States

(12) Patent Application Publication

McKaughan et al.

(10) Pub. No.: US 2012/0038901 A1

(43) Pub. Date: Feb. 16, 2012

(54) **OPTICAL PAYLOAD WITH INTEGRATED LASER RANGEFINDER AND TARGET DESIGNATOR**

(75) Inventors: **Stephen V. McKaughan**, Arlington, MA (US); **Philip A. Rombult**, Boxford, MA (US); **Robert J. Campbell, JR.**, Manchester, NH (US)

(73) Assignee: **FLIR Systems, Inc.**, Wilsonville, OR (US)

(21) Appl. No.: **12/463,882**

(22) Filed: **May 11, 2009**

Related U.S. Application Data

(60) Provisional application No. 61/127,320, filed on May 12, 2008.

Publication Classification

(51) **Int. Cl.**
G01C 3/08 (2006.01)

(52) **U.S. Cl.** **356/4.01**

(57) **ABSTRACT**

A compact optical payload for an unmanned aircraft includes two infrared cameras for wide and narrow field viewing, a daylight color camera, a laser pointer and a laser range finder.

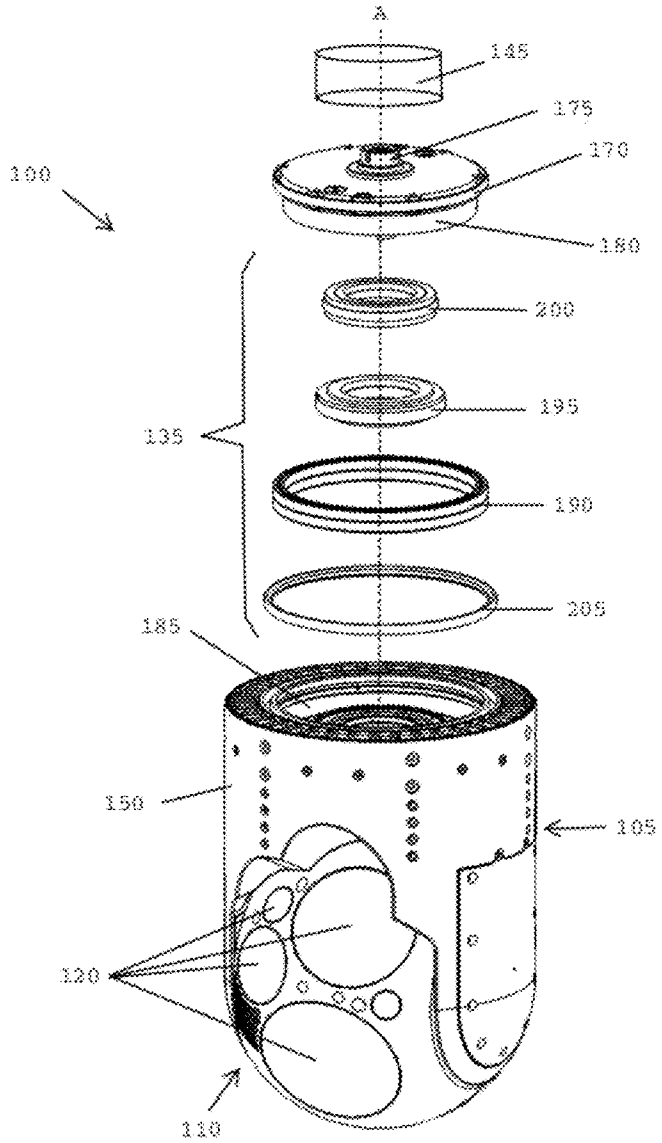

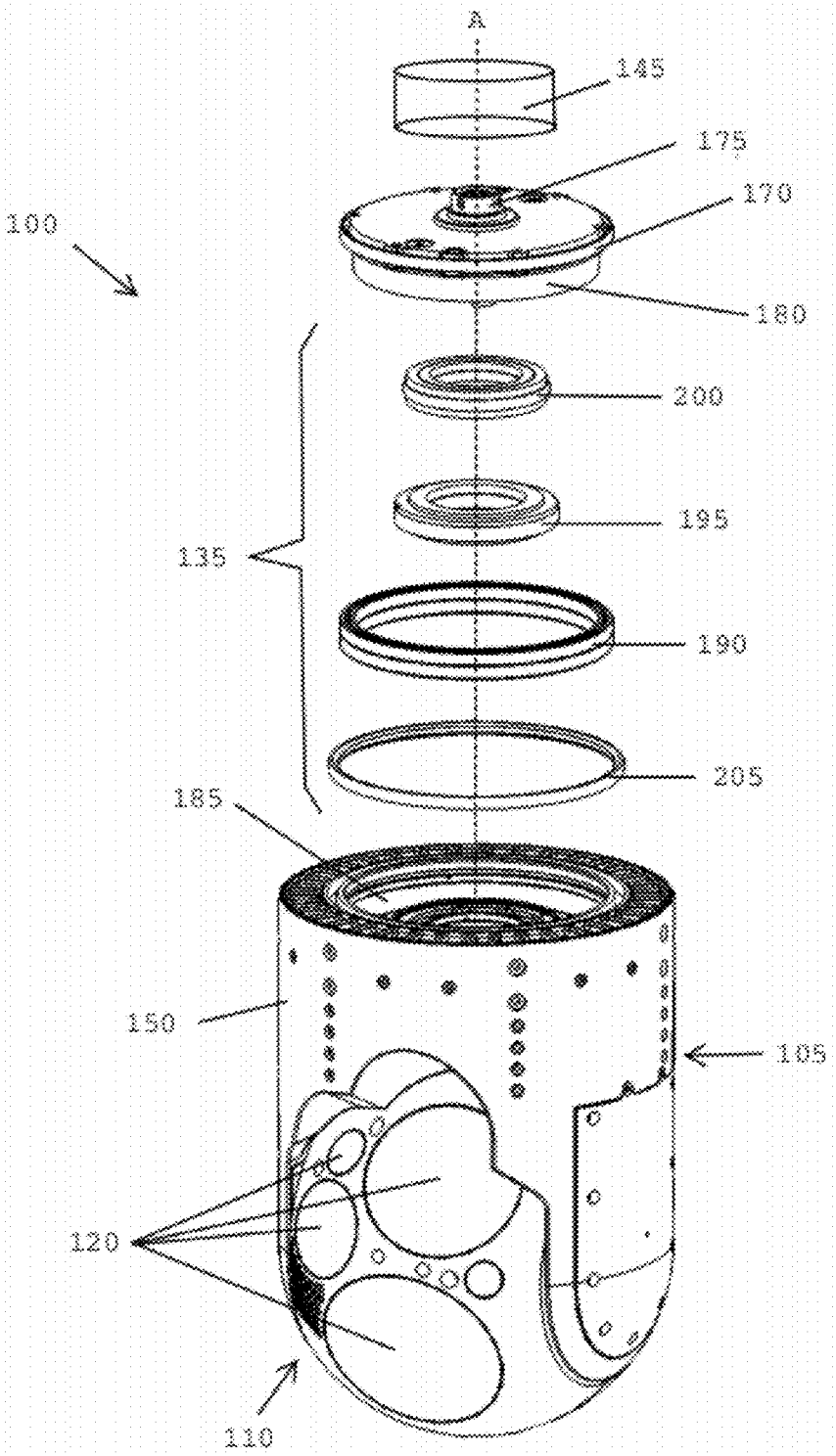

FIGURE 1

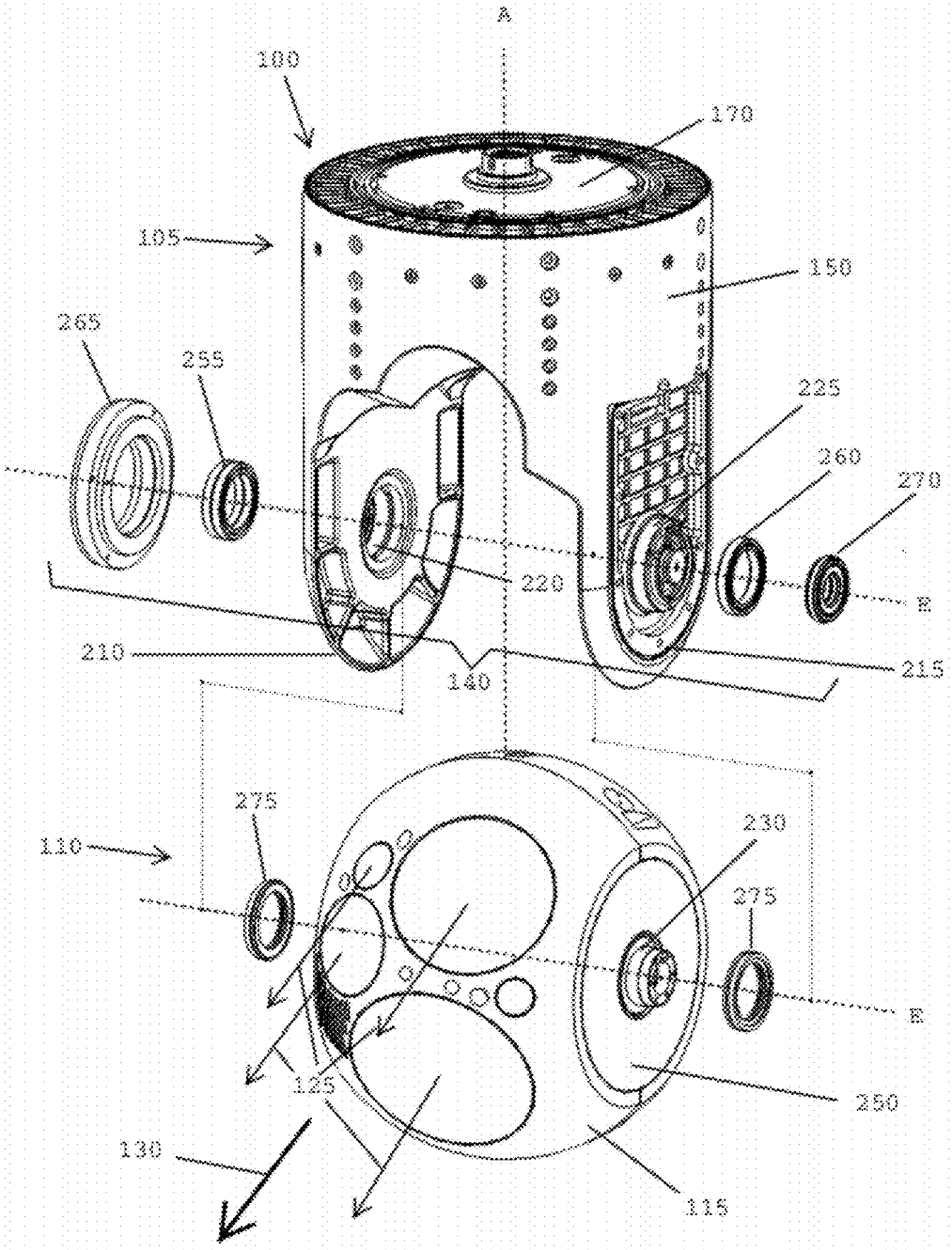
A
100
170
105
150
265
255
225
260
270
220
B
210
215
140
275
230
110
275
B
125
250
130
115

FIGURE 2

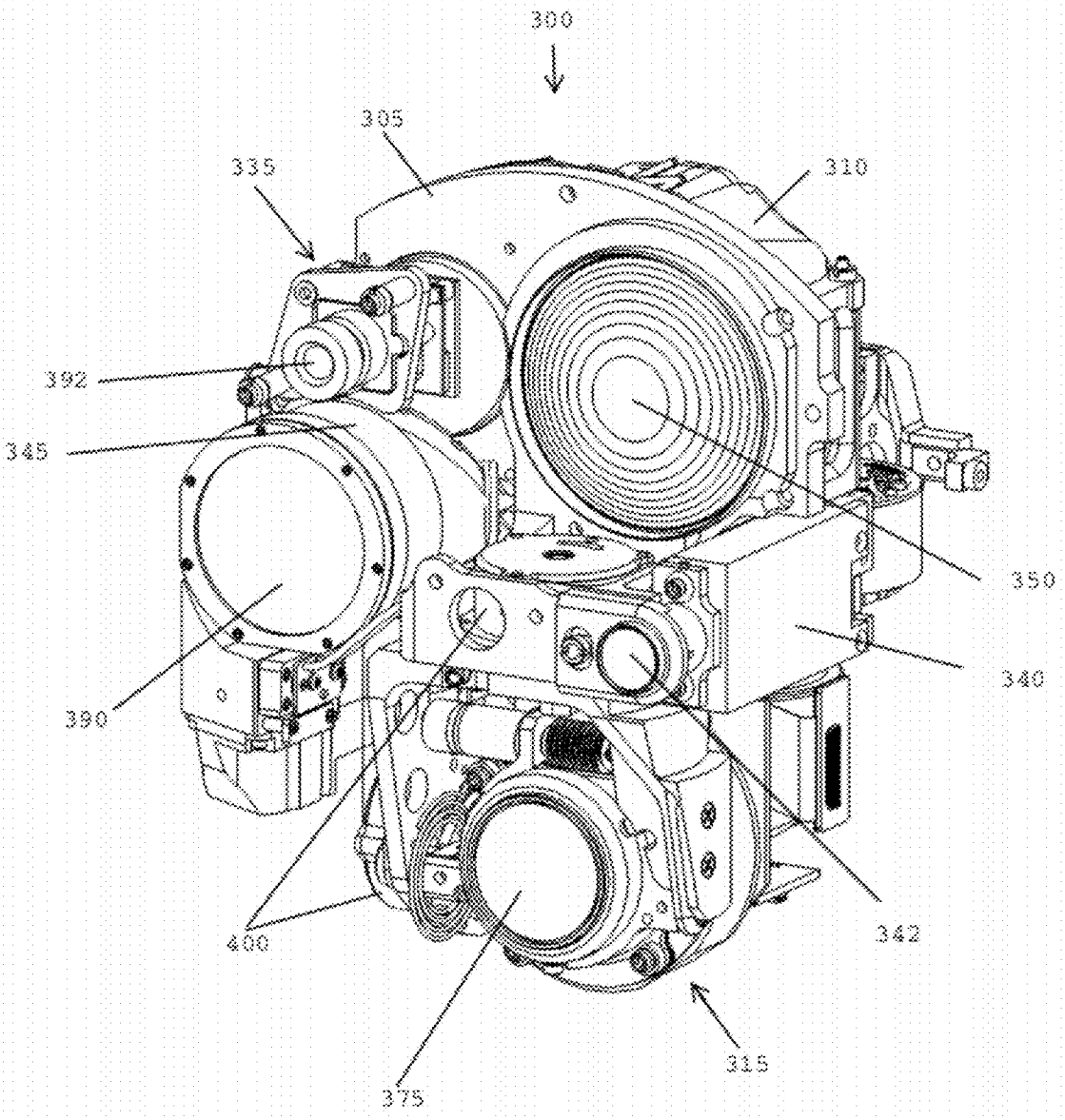

FIGURE 3

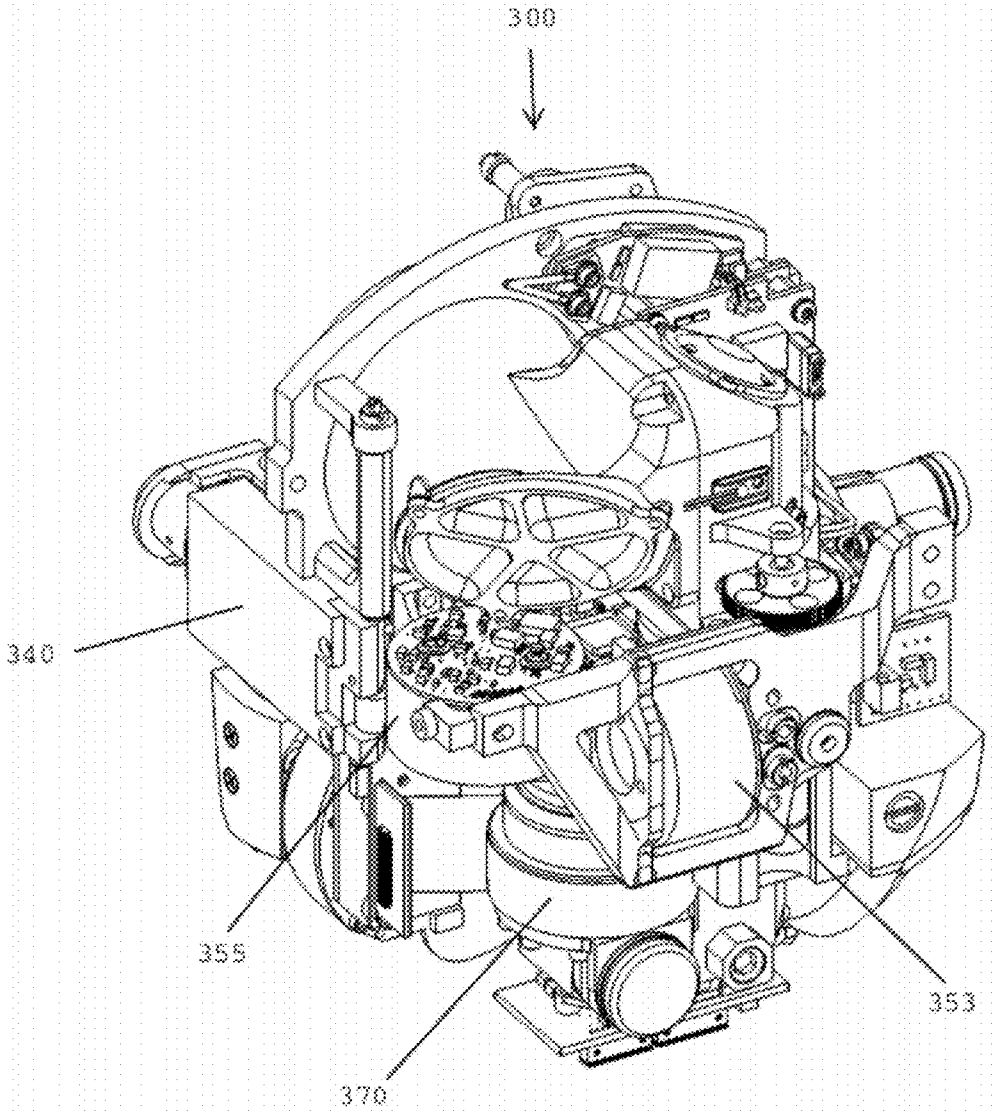

FIGURE 4

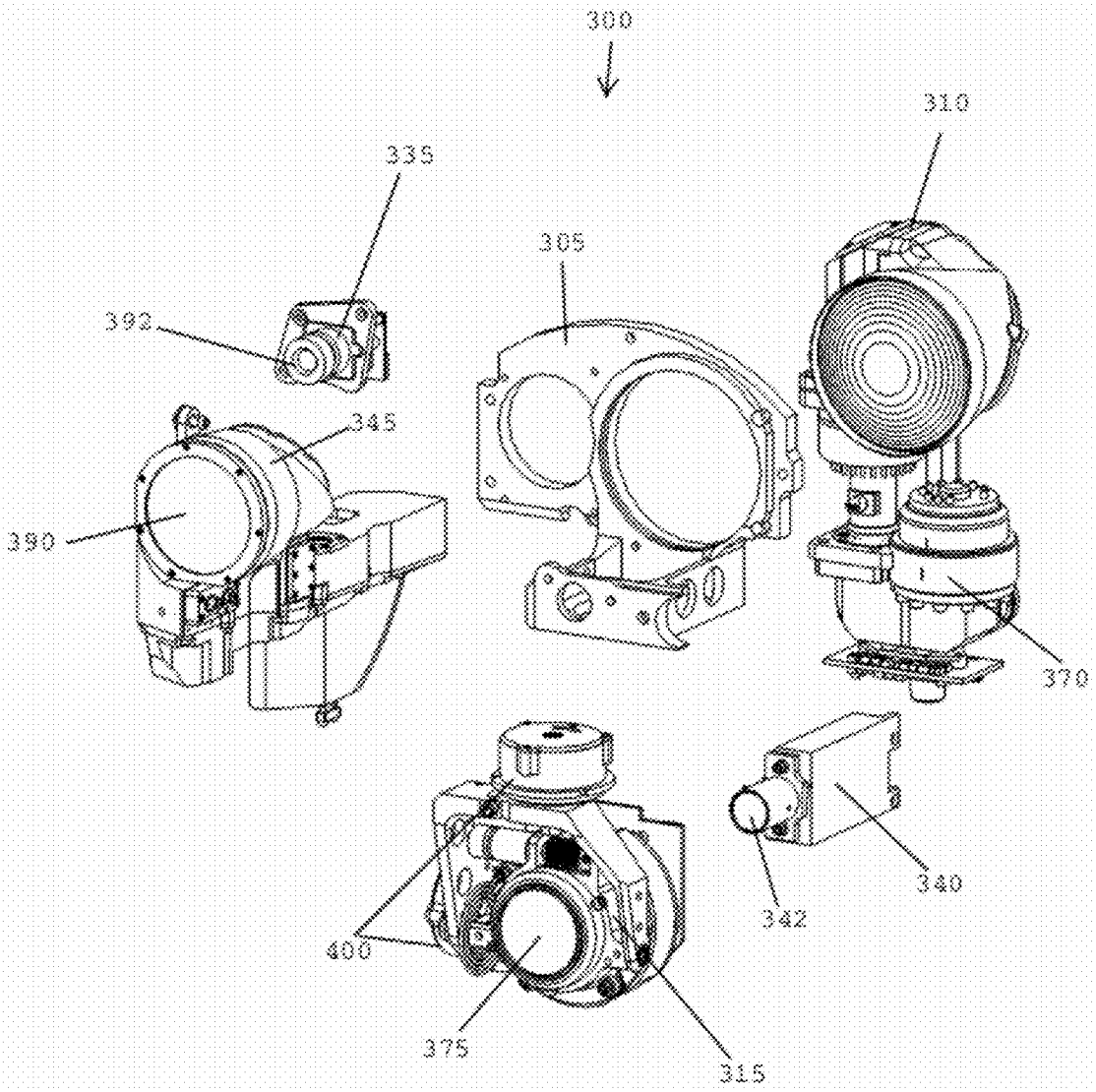

FIGURE 5

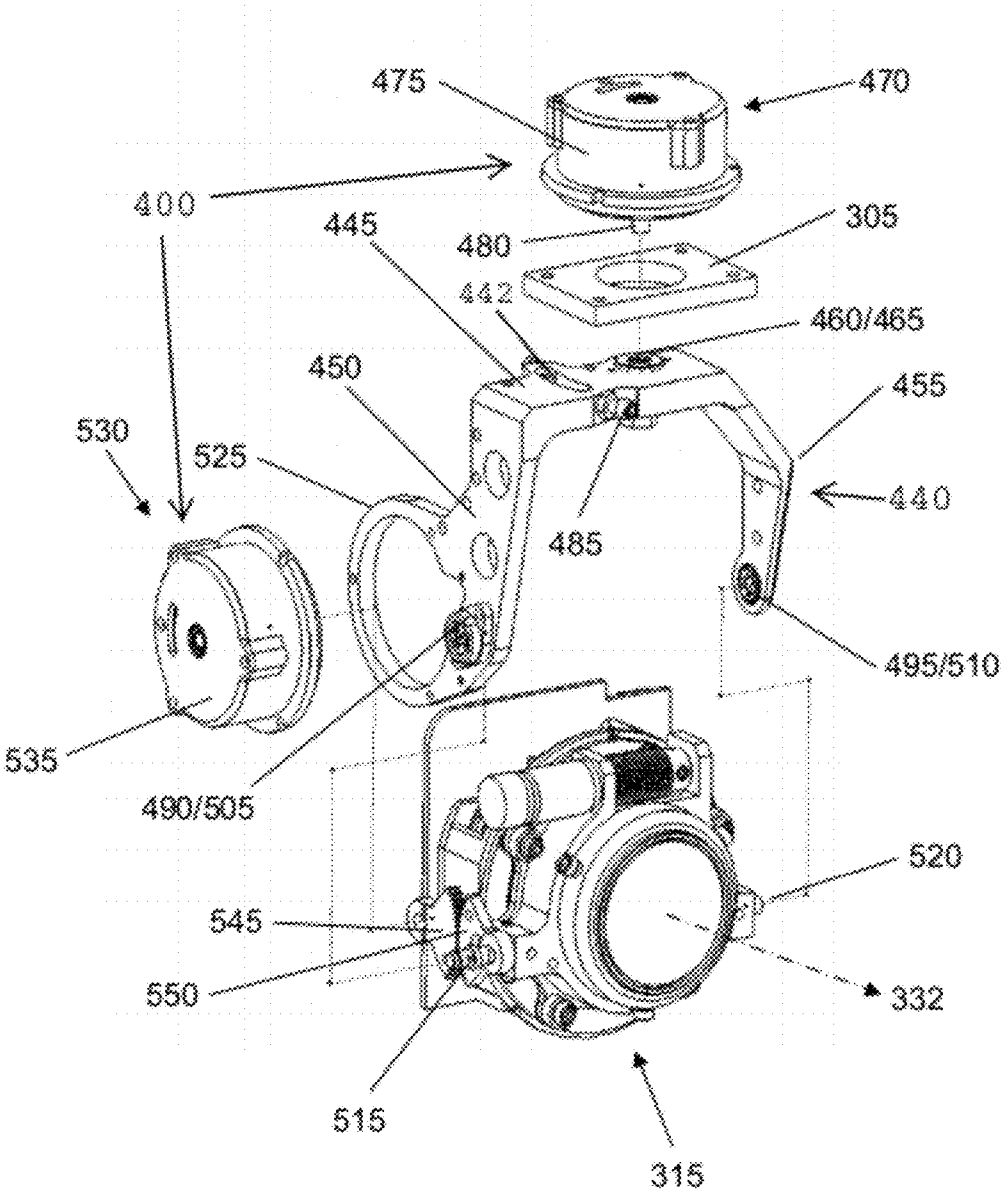
475
470
400
445
480
305
442
460/465
450
455
530
525
440
485
495/510
535
490/505
520
545
550
332
515
315

FIGURE 6

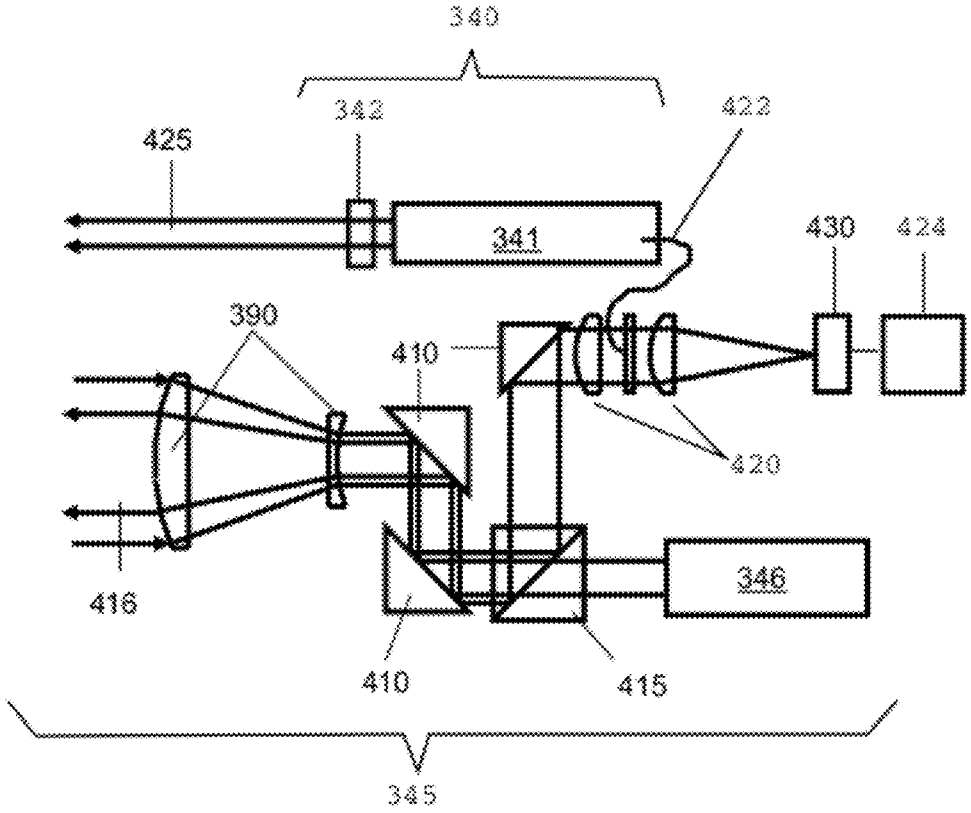

FIGURE 7

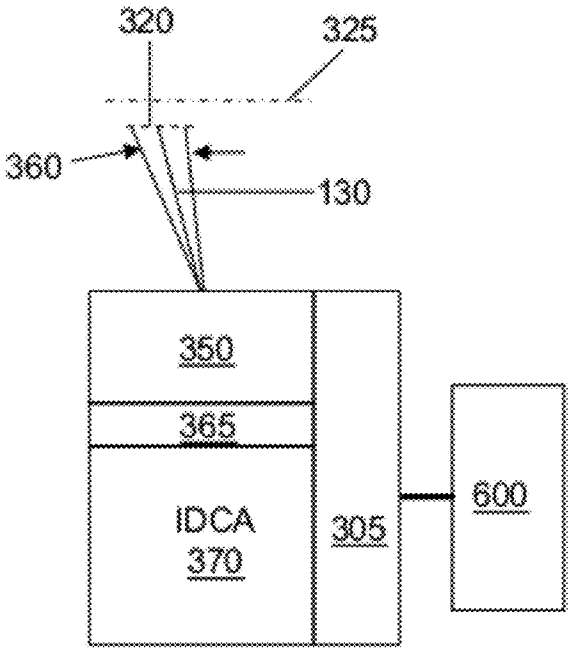

FIGURE 8

PRIMARY CAMERA

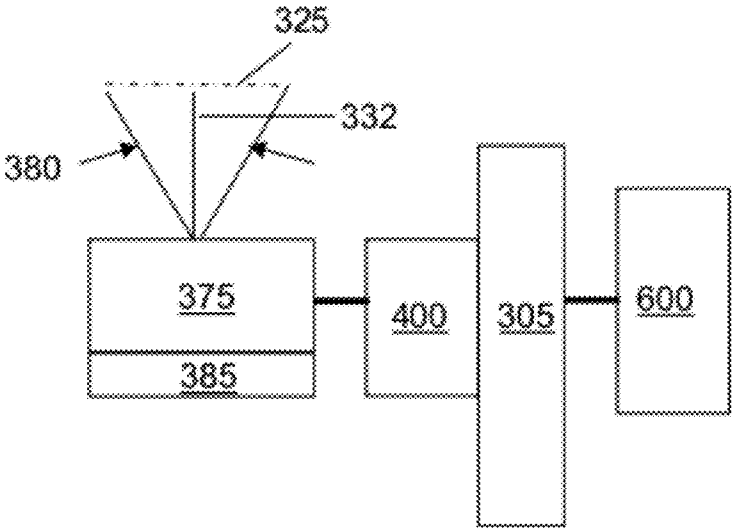

FIGURE 9

SECONDARY CAMERA

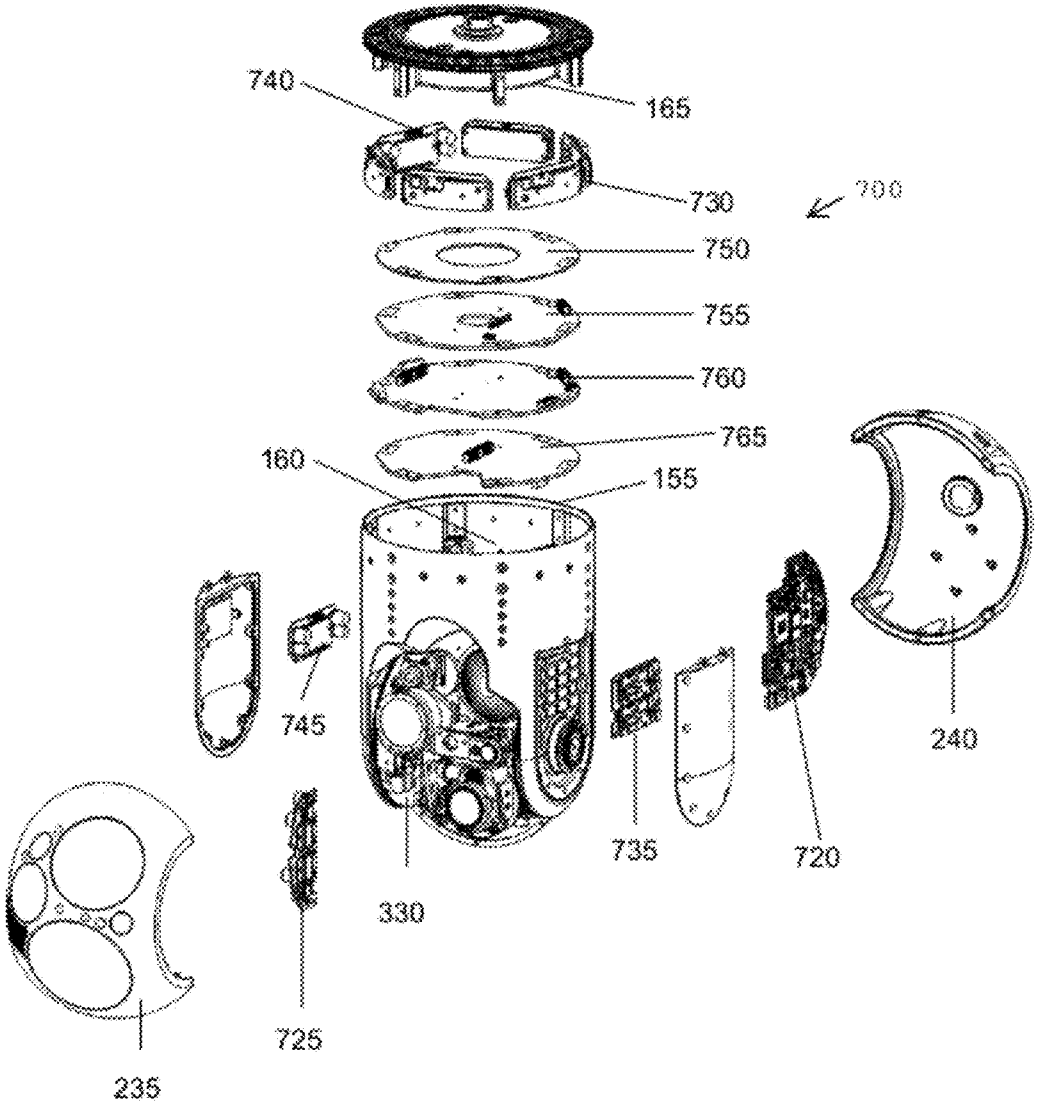
740
165
730
700
750
755
760
765
160
155
745
240
735
720
330
725
235

FIGURE 10

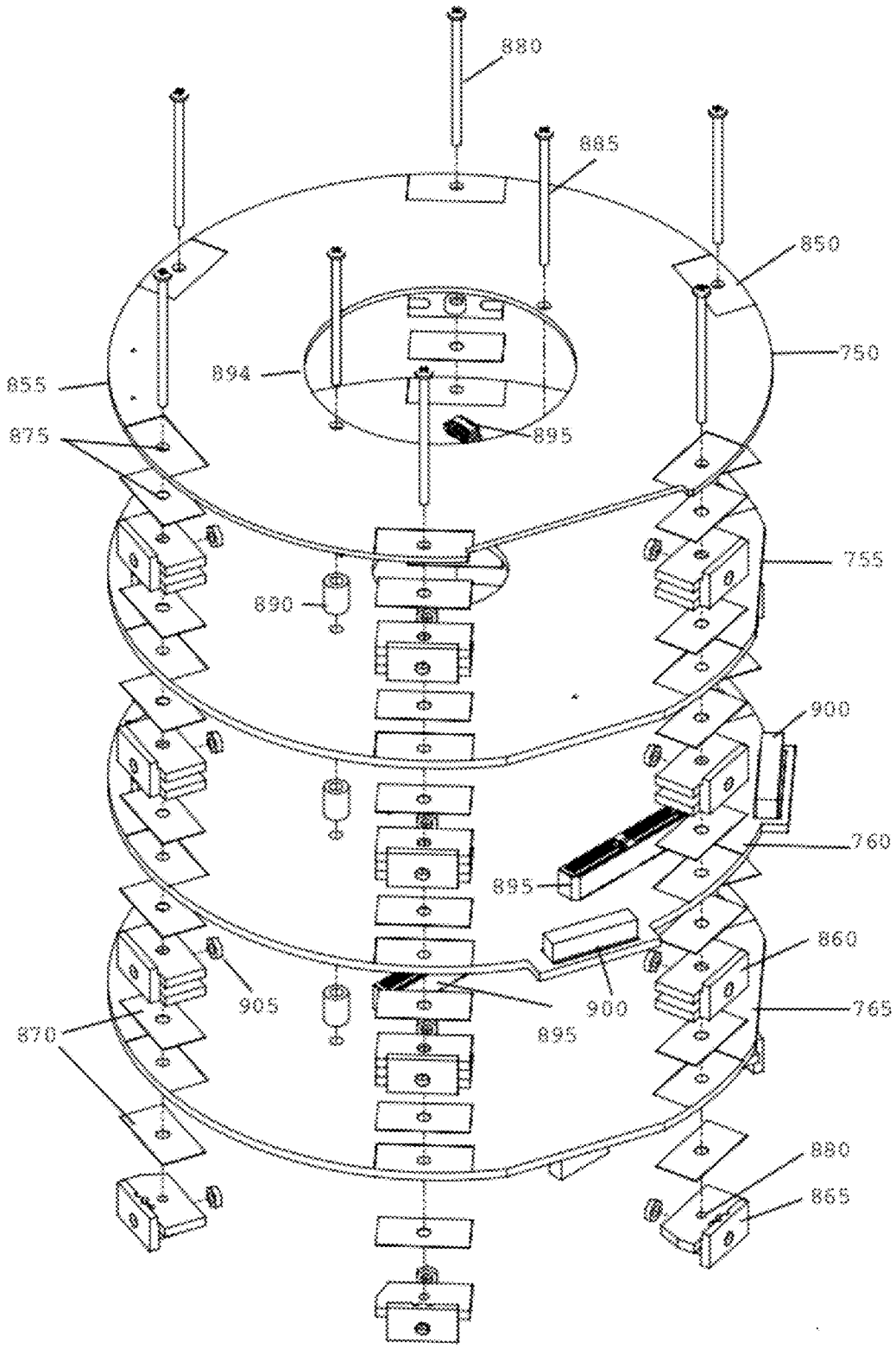
880
885
850
750
855
894
895
875
755
890
900
760
895
860
905
900
895
765
870
880
865

FIGURE 11

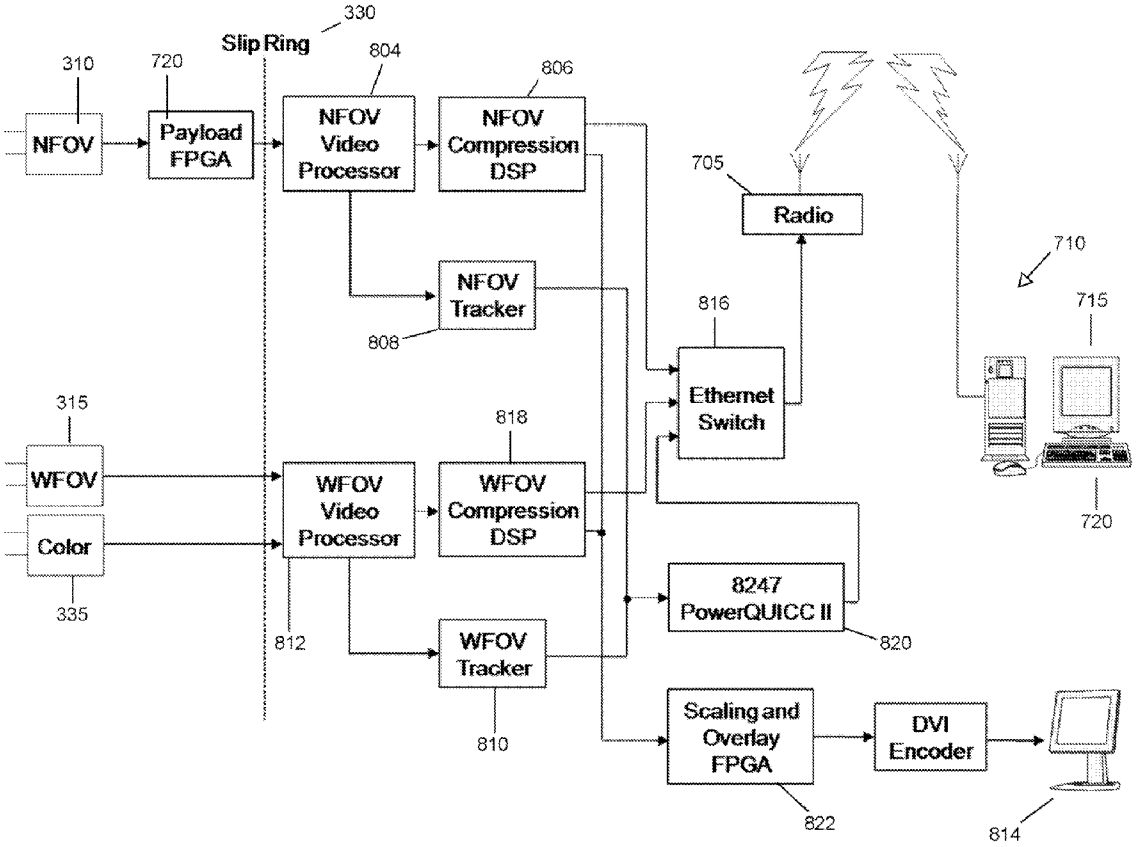
330
Slip Ring
310
720
804
806
NFOV
Payload FPGA
NFOV Video Processor
NFOV Compression DSP
705
Radio
710
NFOV Tracker
808
816
715
Ethernet Switch
315
818
WFOV
WFOV Video Processor
WFOV Compression DSP
720
Color
335
8247 PowerQUICC II
812
820
WFOV Tracker
810
Scaling and Overlay FPGA
DVI Encoder
822
814

FIGURE 12

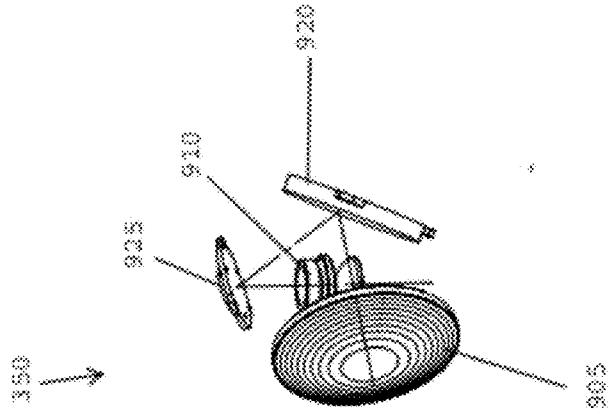

FIGURE 14

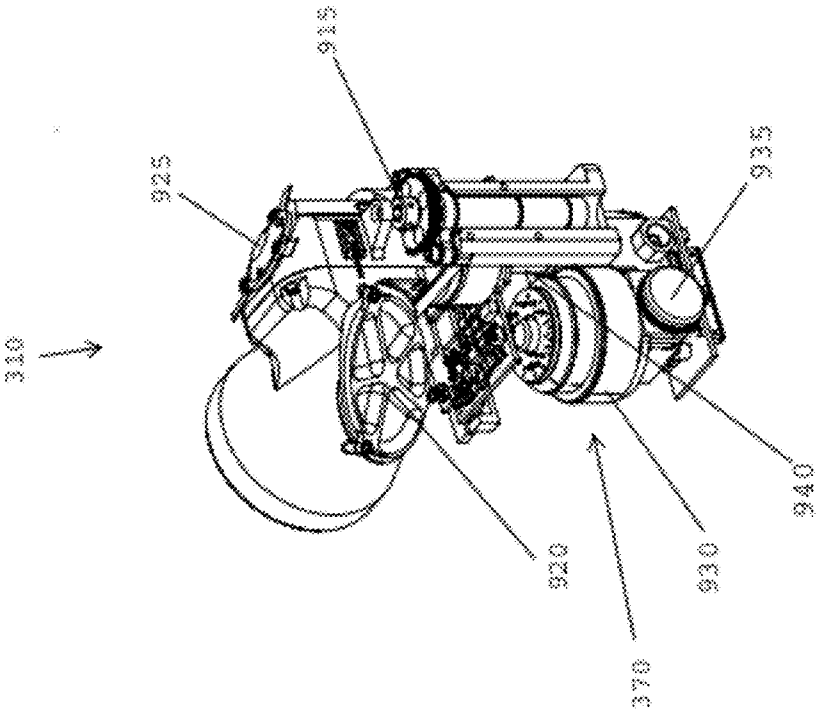

FIGURE 13

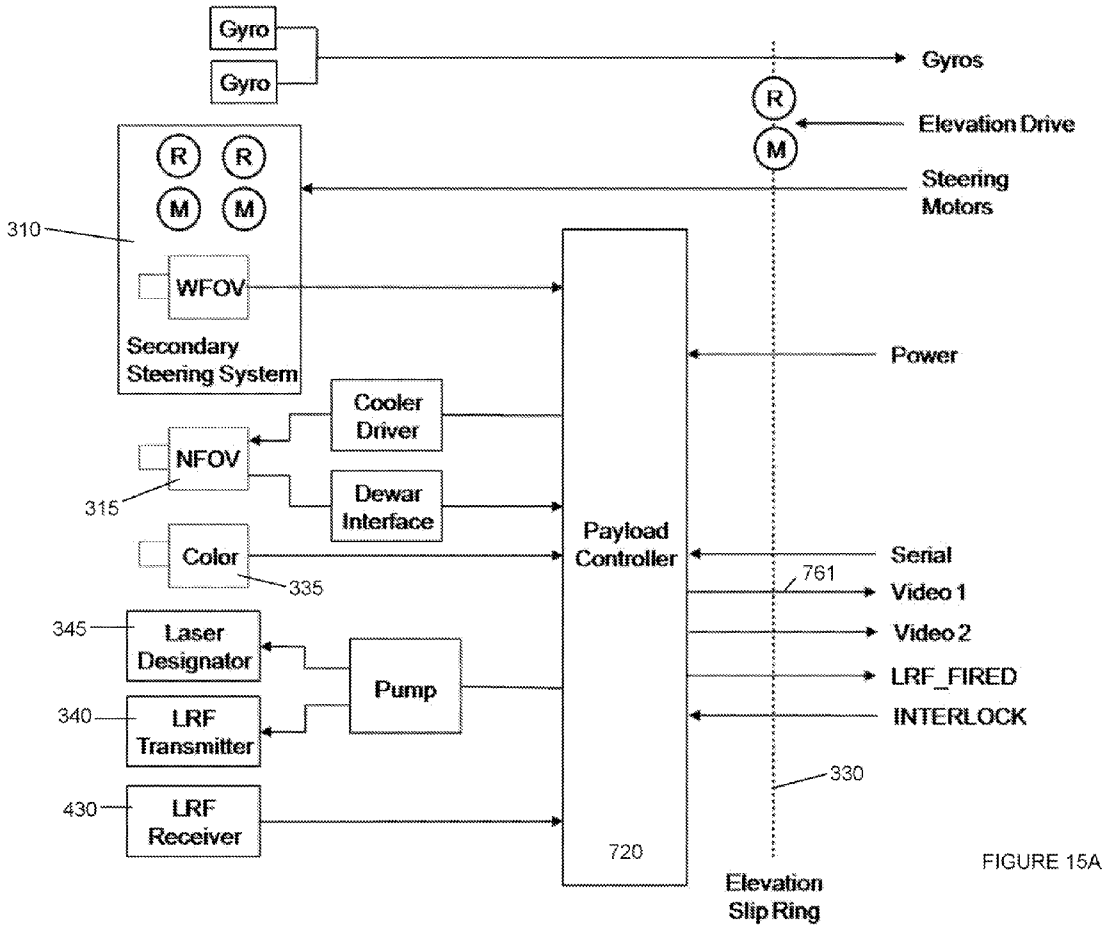
Gyro
Gyro
Gyros
R
M
Elevation Drive
R
R
M
M
Steering Motors
310
WFOV
Secondary Steering System
Power
Cooler Driver
NFOV
315
Dewar Interface
Color
335
Payload Controller
Serial
761
Video 1
Video 2
345
Laser Designator
Pump
LRF_FIRED
340
LRF Transmitter
INTERLOCK
330
430
LRF Receiver
720
Elevation Slip Ring

FIGURE 15A

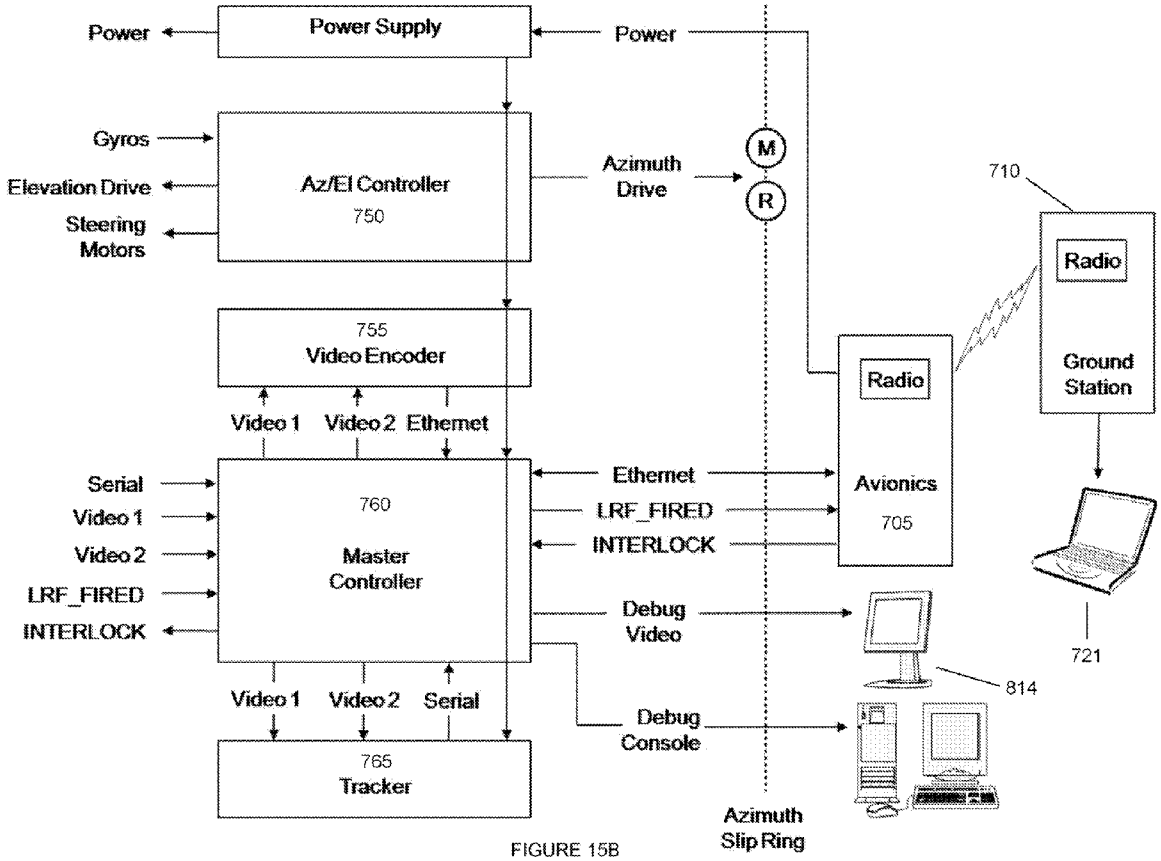
Power
Power Supply
Power
Gyros
Elevation Drive
Steering Motors
Az/El Controller
750
Azimuth Drive
M
R
710
Radio
Ground Station
755
Video Encoder
Radio
Avionics
705
Video 1
Video 2
Ethernet
Serial
Video 1
Video 2
LRF_FIRED
INTERLOCK
760
Master Controller
Ethernet
LRF_FIRED
INTERLOCK
Debug Video
721
814
Video 1
Video 2
Serial
Debug Console
765
Tracker
Azimuth Slip Ring

FIGURE 15B

OPTICAL PAYLOAD WITH INTEGRATED LASER RANGEFINDER AND TARGET DESIGNATOR

CROSS REFERENCE TO PRIOR APPLICATIONS

[0001] This application claims priority under 35 U.S.C. 119(e) to Provisional Application Ser. No. 61/127,320 by McKaughan et al, filed on May 12, 2008, which is incorporated herein by reference in its entirety.

BACKGROUND OF THE INVENTION

[0002] 1. Field of the Invention

[0003] The present invention relates to an optical payload configured to be carried by an Unmanned Airborne Vehicle (UAV) conforming to Class II UAV standards. In particular, the payload includes two or more video cameras and electrical systems suitable for combining video images from two cameras into a single network packeted data stream. A primary video camera includes a folded telescope and a folded cryocooler to reduce a volume footprint of the optical payload. A laser rangefinder and laser target designator share a large aperture telescopic lens system to further reduce a volume footprint of the optical payload. A hollow cylindrical yoke assembly houses circular PC boards to further reduce a volume footprint of the optical payload.

[0004] 2. Description of the Related Art

[0005] Optical payloads for airborne reconnaissance are described in the patent literature. One example system is disclosed in U.S. Pat. No. 5,005,083 by Grage et al. which describes a dual channel camera having wide and narrow fields of view and electrical systems suitable for tracking a target and for combining full image information from both fields of view in a single picture using a mixing device. However, Grage et al. is silent as to whether the two cameras have different spectral ranges, as to the specific camera or pointing platform designs, or as to whether the system includes an incorporated laser range finder or laser target designator.

[0006] Another optical payload system is disclosed in U.S. Pat. No. 6,410,987 by O'Neil which describes a video imaging system that includes wide and narrow field of view lens systems each forming an image of a target area onto the same infrared sensitive focal plane array. The system includes a movable mirror disposed to direct either the wide field of view or the narrow field image of the target area onto the infrared sensitive focal plane array, but not both. The infrared sensor is a two-color sensor having two regions with a first region sensitive to a first infrared wavelength range and a second region sensitive to a second infrared wavelength range. The system includes a dichroic beam splitter disposed between the movable mirror and the two-color focal plane array for dividing the image of the target area into two color images. The dichroic beam splitter splits the image of the target image area into two color images and directs a first color image onto the first focal plane array region sensitive to the first infrared wavelength range and directs the second color image onto the second focal plane array region sensitive to the second infrared wavelength range. However, O'Neil does not teach an optical payload that utilizes a plurality of focal plane arrays with different spectral sensitivity ranges or an optical payload that is capable of rendering and simultaneously displaying video images of the target area over two different fields of view and over two different spectral ranges.

[0007] One example of an optical payload that incorporates a laser rangefinder and a laser target designator and uses a single large aperture optical system to perform multiple tasks is described in U.S. Pat. No. 6,903,343 by Amon et al. which describes a payload having a wide field of view small aperture optical system and a narrow field of view large aperture optical system wherein the large aperture optical system is used to collect energy from a target area to provide a narrow field of view image of a target area focused on a first detector, and an image of a laser designator spot formed on the target area also focused onto a first detector. However, the Amon et al. disclosure does not teach incorporating laser range finder and laser target designator emitters into the optical payload.

[0008] There is a need to reduce the size and weight of camera systems used on Unmanned Airborne Vehicle (UAV). More generally, there is a need to further integrate optical payloads to provide increased functionality, reduced weight and improved aerodynamic performance without sacrificing image quality or decreasing the useful range of the device. It is also useful to allow a user to view two images simultaneously such as a low magnification image of the target area to provide situational awareness and a high magnification image of a selected target within the target area. Moreover UAV payloads may require a visible camera to provide color day image in daylight so that target areas are more recognizable to a remote operator. This is not usually required in a manned aircraft since the aviators are able to see the target area in daylight. the present invention remedies the problems encountered in the prior art.

BRIEF SUMMARY OF THE INVENTION

[0009] An embodiment of the present invention is directed to an optical payload comprising a laser rangefinder transmitter module and a laser target designator module. The laser rangefinder transmitter module comprises a rangefinder laser for emitting a pulsed laser rangefinder beam and a small aperture telescopic lens system configured to substantially collimate and point the laser rangefinder beam at a target area. The laser target designator module comprises a designator laser for emitting a pulsed laser target designator beam, a large aperture telescopic lens system configured to substantially collimate and point the designator beam at the target area, a laser rangefinder receiver module, first optical elements disposed along a first optical path between the large aperture telescopic lens system and the designator laser for directing the pulsed laser target designator beam from the designator laser to the large aperture telescopic lens system. The inventive optical payload further comprises second optical elements disposed along a second optical path between the large aperture telescopic lens system and the laser rangefinder receiver module for directing energy of the a pulsed laser rangefinder beam reflected by the target area and collected by the large aperture telescopic lens system onto the laser rangefinder receiver module.

[0010] Another embodiment of the present invention is directed to a method for operating an optical payload. The inventive method comprises the steps of: (i) emitting a pulsed laser rangefinder beam from a laser rangefinder transmitter module; (ii) collimating the pulsed laser rangefinder beam and directing the collimated pulsed laser rangefinder beam onto a target area using a small aperture telescopic lens system attached to the laser rangefinder transmitter module; (iii) collecting energy of the collimated pulsed laser rangefinder beam reflected by the target area using a large aperture tele-

scopic lens system and (iv) directing energy collected thereby onto a laser rangefinder receiver module. The large aperture telescopic lens system and laser rangefinder receiver module are housed in a laser target designator module, the laser rangefinder transmitter module and the laser target designator module are mechanically independent modules.

BRIEF DESCRIPTION OF THE DRAWINGS

[0011] The features of the present invention will best be understood from a detailed description of the invention and a preferred embodiment thereof selected for the purposes of illustration and shown in the accompanying drawing in which:

[0012] FIG. **1** is an exploded isometric view depicting elements of an optical payload according to the present invention.

[0013] FIG. **2** is an exploded isometric view depicting further elements of an optical payload according to the present invention.

[0014] FIG. **3** is a front isometric view depicting an optical bench assembly according to the present invention.

[0015] FIG. **4** is a rear isometric view depicting an optical bench assembly according to the present invention.

[0016] FIG. **5** is an exploded isometric view of an optical bench assembly according to the present invention.

[0017] FIG. **6** is an exploded isometric view depicting a secondary drive and secondary camera according to the present invention.

[0018] FIG. **7** is a schematic view depicting a combined laser rangefinder and laser target designator according to the present invention.

[0019] FIG. **8** is a schematic plan view depicting a primary video camera for rendering an image of a target area according to the present invention.

[0020] FIG. **9** is a schematic plan view depicting a secondary video camera for rendering an image of a scene area according to the present invention.

[0021] FIG. **10** is an exploded isometric view depicting electrical subsystems of an optical payload according to the present invention.

[0022] FIG. **11** is an exploded isometric view depicting a plurality of circular PC boards and related mounting elements according to the present invention.

[0023] FIG. **12** is a schematic view of video data paths through the optical payload according to the present invention.

[0024] FIG. **13** depicts a rear isometric view of a primary video camera that includes a folded large aperture telescopic lens system and a folded cryocooler for cooling a primary focal plane array according to the present invention.

[0025] FIG. **14** depicts an optical schematic view of a folded large aperture telescopic lens system according to the present invention.

[0026] FIG. **15** depicts a schematic view of an optical payload electrical system according to the present invention.

DETAILED DESCRIPTION OF THE INVENTION

[0027] Referring to FIGS. **1-5** and **10** an optical payload **100** is shown in various views. FIGS. **1** and **2** depict exploded external isometric views of the optical payload **100** which includes a yoke assembly **105**, configured to rotate about an azimuth axis A, and a spherical payload assembly **110**, supported by the yoke assembly **105** and configured to rotate about an elevation axis E. The spherical payload assembly **110** comprises an optical bench assembly **300**, shown in FIGS. **3-5**, housed within a spherical housing **115**. The spherical housing **115** includes optical apertures passing therethrough and aperture windows **120** installed within each optical aperture.

[0028] The optical bench assembly **300** includes a plurality of optical systems, detailed below, for collecting or emitting radiation through aperture windows **120**. Each optical system collects or emits radiation over a field of view defined by a solid angle centered by a central ray or window pointing axis **125**. Some or all of the window pointing axes **125** may be co-aligned along a common or primary pointing axis **130**.

[0029] Referring to FIGS. **1-2** and **89** the optical payload **100** includes a primary drive system that includes a first or azimuth drive and rotary joint assembly, generally referred to by reference numeral **135**, and a second or elevation drive and rotary joint assembly, generally referred to by reference numeral **140**. The primary drive system operates to point the primary pointing axis **130** at a target area of interest. The primary drive system, collectively **600**, includes separate and independent servo controllers for separately controlling the azimuth drive and joint assembly **135** and the elevation drive and joint assembly **140**.

[0030] The primary drive system **600** is operable in various modes such as a "search mode" to continuously scan the primary pointing axis **130** over a region, a "manual mode" wherein a remote user can point the primary pointing axis **130** manually using a joy stick or the like, in a "scene tracking mode" wherein the primary pointing axis **130** tracks a moving target, in a "geo-pointing mode" wherein the primary pointing axis **130** is continuously pointed at specific geographic coordinates, and may operate in other pointing modes.

[0031] The azimuth drive and rotary joint assembly **135** is installed within the yoke assembly to rotate the yoke assembly **105** and the attached spherical payload assembly **110** about a substantially vertical azimuth axis A. The elevation drive and rotary joint assembly **140** is disposed between the yoke assembly **105** and the spherical payload assembly **110** and serves to rotate the spherical payload **110** about a substantially horizontal elevation axis E. The spherical payload **110** rotates with respect to the yoke assembly **105** and with respect to a support structure **145**. Each of the rotary joints and drives is capable of 360 degree rotation, however, in some orientations the aperture windows are vignetted by the yoke assembly **105**.

[0032] The optical payload **100** is attached to the support structure **145**, and the primary drive system **600**, using the azimuth and the elevation drives, rotates the yoke assembly **105** and the spherical payload **110** to point the primary pointing axis **130** at a scene of interest. The optical payload **100** includes an electrical power source and power distribution systems, optical systems, electrical control and feedback systems, and communications systems as required to point the primary pointing axis **130** at a target area, to render video images of the target area and to transmit the video images to a remote station for display and viewing by a user. In particular, the optical payload **100** is configured to simultaneously transmit two video images of the scene of interest with each video image being rendered over a different spectral range. Moreover, the communications systems may receive user generated operating commands from the remote station to control various modes of operation of the optical payload **100**.

[0033] In a preferred embodiment, the support structure **145** comprises an airborne vehicle and especially an Unmanned Airborne Vehicle (UAV) conforming to Class II UAV standards. Accordingly, the preferred optical payload **100** is constructed with weight, volumetric footprint, and aerodynamic drag properties suitably optimized for being carried as a payload on a Class II UAV. In particular, the preferred optical payload **100**, excluding the support structure **145**, has a design weight of less than 16 pounds and the preferred spherical payload assembly **110** has a spherical diameter of less than 190.0 mm and with the present example having a spherical diameter of 184.0 mm, (7.25 inches).

[0034] Referring now to FIGS. **1**, **2** **10**, **12** and **15**, the yoke assembly **105** comprises a cylindrical top section **150** formed by a thin annular wall **155** surrounding a hollow electronics cavity **160**. The hollow electronics cavity **160** houses a plurality of circular printed circuit boards, (PCB's), (**750**, **755**, **760**, **765**), shown in FIGS. **10** and **11**, populated with surface mounted digital and analog electrical components, electrical connectors, forming subsystems for video processing, motor and servo control, target tracking, gyro stabilization, communications, camera operation, and the like. The hollow electronics cavity **160** also includes an upper bracket **165** that installs into a top circular opening of the cylindrical top section **150** and is attached to the thin annular wall **155** for sealing the hollow electronics cavity **160**, for providing structural stiffness to the top end of the annular wall **155** and for supporting a rotary interface with an azimuth hub **170**.

[0035] The yoke assembly **105** includes a disk shaped azimuth hub **170** that mechanically attaches to a support structure **145** and includes mounting features, not shown, for orienting the payload assembly primary pointing axis **130** with respect to the support structure **145**. The azimuth hub further includes an electrical connector **175** extending upward from the mounting flange to connect electrical systems housed in the payload assembly **100** with an electrical system carried by the support structure and especially to communicate with a radio **705** shown in FIGS. **12** and **15**. The azimuth hub **170** includes an external seal diameter **180** sized to mate with the upper bracket **165** at a corresponding internal seal diameter **185** thereof. The azimuth hub **170** is fixedly attached to the support structure **145** by the azimuth hub **170** and the upper bracket **165** is fixedly attached to the cylindrical top section **150** through the thin annular wall **155** The azimuth drive and rotary joint **135** form a rotary joint disposed between the azimuth hub **170** and the upper bracket **165**. In particular, the azimuth drive and rotary joint **135** includes a rotary bearing, such as a duplex bearing set **190**, for providing a rotary joint between the upper bracket **165** and the azimuth hub **170**.

[0036] The azimuth drive includes an azimuth drive motor **195**, such as a flat or pancake style motor, and a first rotary position resolver **200** suitable for sensing a rotary position or rotation angle. The rotary position resolver **200** may comprise an optical encoder, Hall Effect sensors, or other suitable rotary angle position transducer. In addition, the azimuth drive and rotary joint assembly **135** includes a cavity seal **205** disposed between the seal diameters **180** and **185** for sealing the hollow electronics cavity **160** from moisture and contamination. Alternately, the cavity seal **205** may be configured as a pressure seal and the hollow electronics cavity may be filled with a pressurized gas or may be evacuated to a vacuum pressure.

[0037] The yoke assembly **105** includes opposing left and right yoke arms **210**, **215** extending downwardly from the top section **150**. Each yoke arm **210**, **215** includes a hub support feature **220**, **225** such as a through or blind bore, formed coaxial with the elevation axis E. The hub support features **220**, **225** mate with opposing left and right cylindrical mounting hubs **230**, (only the right hub mounting feature is shown), that extend out from the payload assembly **110**. Referring now to FIGS. **2-6** and **10**, the payload assembly **110** comprises a substantially spherical outer housing **115** sized to enclose an optical bench assembly **300**, shown in front isometric view in FIG. **3** and in rear isometric view in FIG. **4**. The spherical housing **115** comprises a front section **235** that includes the apertures and optical windows **120** and a rear section **240** that mates with the front section **235**. In addition, a pair of opposing left and right disk-shaped side sections, **250**, only one is shown in FIG. **2**, are formed to mate with the front section **235** and rear section **240** to enclose and seal the optical bench assembly **300** from moisture and contaminates. Accordingly, mating surfaces of the front section **235**, the rear section **240** and the left and right disk-shaped side sections **250** may be sealed by gaskets or other sealing elements or compounds applied thereon at assembly.

[0038] Preferably the yoke assembly top section **150** and left and right yoke arms **210**, **215** comprise a unitary machined part to increase stiffness and to meet stringent tolerance required. However, other embodiments such as a metal casting or composite structure may be used. The spherical housing front and rear sections **235** and **240** preferably comprise metal castings while the left and right side section **250** are preferably machined parts, however other embodiments are usable without deviating from the present invention. Additionally, any metal casting may be further modified by machining and other metal-forming steps to fabricate machined features such as holes, precision mating surfaces, bearing journals and other features as may be required. In particular, the metal castings are formed with thin walls using lightweight, high-stiffness materials comprising aluminum and/or titanium or other metals as required to reduce part weight without compromising structural integrity. Alternately, some or all of the cast elements may comprise cast or molded plastic materials such as polycarbonate, or the like, or may comprise composite materials such as wound carbon or glass fibers, in a base of epoxy and or other bonding agents.

[0039] The disk-shaped side sections **250** support the left and right mounting hubs **230** and define the elevation axis E on the optical bench assembly **300**. The elevation drive and rotary joint **140** includes opposing left and right bearings **255**, **260** disposed between the left and right mounting hubs **230**, only one shown, and the left and right hub support features **220**, **225** for providing a rotary joint between the yoke arms **210**, **215** and the spherical payload assembly **110**. The left bearing **255** may comprise a duplex bearing set to reduce longitudinal and axial play in the rotary joint.

[0040] A rotary elevation drive motor **265**, such as a flat or pancake style motor, attaches to the left yoke arm **210** and the left mounting hub, not shown, to provide a rotary drive force for rotating the payload assembly **110** about the elevation axis E and with respect to the yoke assembly **105** and support structure **145**. A second rotary position resolver **270** suitable sensing rotary position or rotation angle, such as an optical encoder, Hall effect sensors or other suitable angular position transducer, interfaces with the right mounting hub **230** and the right hub support feature **225** to provide an electrical signal in proposition to the angular position of the spherical payload assembly **110** with respect to a reference angular position or

orientation. A pair of cavity seals **275** are disposed over the left and right mounting hubs **230** between the disk-shaped side sections **250** and the left and right hub support features **220**, **225** to seal the spherical housing **115** and the elevation drive and rotary joint **145** from contaminates and moisture. It is a particularly advantageous feature of each of the azimuth and elevation drives of the present invention that both drives are rotatable over a full 360 degree angle. This is in part due to the construction of conductive slip rings **330** for exchanging electrical signals including electrical power signals between electrical systems housed inside the hollow cavity **160** and electrical systems housed inside the spherical housing **115**. The slip rings are shown in FIG. **10** disposed between the yoke arm **210** and the optical bench assembly **300**. The slip rings **330** include a first conductive ring fixedly attached to the yoke assembly **105** and a second conductive ring fixedly attached to the payload assembly **110**. The first and second rings remain in electrical contact with each other as the payload assembly **110** rotates about the elevation axis E with respect to the yoke assembly **105**. As shown in FIG. **15**, power and electrical signals pass from electrical systems housed in the yoke assembly **105** through the slip rings **330** to the payload controller **720**, which is housed in the payload assembly **110** and in electrical communication with electrical elements of the optical payload. Similarly, electrical signals including video data pass from electrical elements of the optical payload to the payload controller **720** through the slip rings **330** to electrical systems housed in the yoke assembly **105**.

Optical Bench Assembly

[0041] Referring now to FIGS. **3-9**, the optical bench assembly **300** is shown in a front isometric view in FIG. **3** and in a back isometric view in FIG. **4**. The optical bench assembly **300** installs inside the spherical housing **115** and comprises a rigid optical bench **305** configured to structurally support a plurality of optical systems thereon. Preferably the optical bench **305** comprises a metal casting, or the like, formed with cast structural sections machined to add features such as holes and precision interface surfaces usable as attaching and locating features for optical systems. A primary video camera **310** attaches directly to the optical bench **305**. The primary video camera **310** is configured to render a video image of a primary target area **320** shown in FIG. **8**, over a mid-infrared spectral range and a central ray of the primary camera field of view defines the primary pointing axis **130**.

[0042] A secondary video camera **315** is mounted on a secondary drive system **400**, shown in detail in FIG. **6**. The secondary drive system **400** is rigidly attached to the optical bench **305** and configured to movably support the secondary video camera **315** for rotation with respect to the optical bench **305** about two rotational axes. The secondary video camera **315** is configured to generate a video image of a target area **325** shown in FIG. **9**, over a long-infrared spectral range and a central ray of the secondary camera field of view defines a secondary pointing axis **332**.

[0043] The preferred optical bench assembly **300** includes a third video camera **335**, a laser range finder transmitter module **340** and small aperture telescopic lens system **342** for collimating a laser transmitter beam, a laser target designator module **345** and associated large aperture telescopic lens system **390** for collimating a laser designator beam. Each of the third video camera **335**, laser rangefinder transmitter module **340** and laser target designator module **345** have a field of view and an individual pointing axis **125**, which is preferably aligned or bore sighted coaxially with the primary pointing axis **130**. Preferably the third video camera **335** is configured to generate a video image of the secondary target area **325** shown in FIG. **9**, over a visible spectral range.

[0044] Referring now to FIGS. **8** and **9**, the primary video camera **310** comprises a high resolution, narrow field of view, (NFOV) video camera usable to render a mid-range infrared image of a primary target area **320** within a larger target area **325**. More specifically, the primary video camera **310** is configured to render a magnified image of a portion of the target area **325** and the magnified image has sufficient optical resolution to identify a primary target from a specific range. The primary video camera **310** includes a primary telescopic lens system **350** having an effective focal length of approximately 200 mm and a stop aperture, or the like, defining the NFOV, e.g. approximately encompassing a solid angle of 2.7 degrees horizontal, **360**, by 2.0 degree vertical. The central ray of the NFOV may define the primary pointing axis **130**. Alternately, the laser target designator beam **416** may define the primary pointing axis **130**, in which case other elements of the optical payload are bore-sighted to co-align with the designator beam **416**. The primary video camera **310** rigidly attaches to the optical bench **305** and is therefore pointed at a desired primary target area **320** by movement of the primary drive system **600**. Referring now to FIGS. **5**, **13** and **14**, the primary telescopic lens system **350** is folded by two fold mirrors **920** and **925** each disposed at a compound angle with respect to the telescope optical axis. In addition, an integrated Dewar and cryogenic cooler module, (IDCA) **370** is coupled to the primary video camera **310** and supported by the optical bench **305**. The IDCA **370** cools a primary focal plane array and other local support structure of the primary video camera to an operating temperature of approximately 77° K to reduce signal noise in the focal plane array. More specifically the IDCA **370** comprises a folded compact cryocooler design such as the one disclosed in co-pending and commonly assigned U.S. patent application Ser. No. 11/433,697, entitled COOLED INFRARED SENSOR ASSEMBLY WITH COMPACT CONFIGURATION, filed on May 12, 2006, the entirety of which is incorporated herein by reference. The cryocooler **370** comprises a rotary DC motor **930** driving a gas compressor. The gas compressor is housed in a crankcase **935**. The rotary DC motor **930** is also connected to a regenerator piston **940** through a folded linkage that is also housed in the crankcase **935**. Rotation of a shaft of the DC motor **930** is coupled to the regenerator piston **940** through the folded linkage which reciprocally drives the regenerator piston **940** along a linear axis that is substantially parallel with the rotation axis of the DC motor **930**. Thus, the folded cryocooler design reduces its longitudinal length. According to the present invention, both the primary telescope **350** and the IDCA **370** are folded in order to reduce the volume foot print of the primary video camera **310** and more specifically, to reduce the spherical diameter of the payload assembly **110**.

[0045] As shown in FIG. **14**, the primary telescope **350** includes a large aperture objective lens **905** and a plurality of focus elements **910** with some of the focus elements being movable along the telescope optical axis to adjust the focal plane location of the lens system **350**. The lens system **350** further includes a conventional automated lens actuator **915** configured to axially displace one or more of the focus elements **910** as required to adjust the position of a focal plane of the lens systems **350**.

[0046] The primary video camera **310** includes a conventional focal plane array **365**, shown schematically in FIG. **8**, comprising a plurality of active image sensors disposed over an active area which is positioned in a focal plane of the primary telescopic lens system **350** such that the primary telescopic lens system **350** forms a focused image of the primary target area **320** that substantially fills the active area of the focal plane array **365**. As stated above, at least one of the focus elements **910** is movable by an actuator to change the position of the lens system focal plane with respect to the position of the focal plane array **365**. The primary video camera **310** may also include an automated shutter adjusting system for varying the stop aperture size or other characteristics of the primary video camera **310** in order to maintain irradiance levels at the primary focal plane array **365** to within usable limits.

[0047] The primary focal plane array **365** is configured to generate a photo current in response to mid-range infrared radiation falling thereon, e.g. radiation with a wavelength of 3-5 microns. More specifically, the primary focal plane array comprises an array of 640×480 indium antimonide (InSb) detector elements and the entire array and local support structure is cooled by the IDCA **370** to an operating temperature of approximately 77° K to reduce signal noise in the focal plane array.

Secondary Camera

[0048] The secondary video camera **315** comprises a wide field of view, (WFOV) video camera usable to render a long-range infrared image of the target area **325**. More specifically, the secondary video camera **315** is configured to render an image of the target area **325** with sufficient optical resolution to detect the presence of a target from a specific range. The secondary video camera **315** includes a secondary telescopic lens system **375** having a fixed magnification and an effective focal length of approximately 25.0 mm and a stop aperture, or the like, defining the wide field of view, e.g. approximately encompassing a solid angle **380** of 35 degrees horizontally and a solid angle of 27 degrees vertically. The central ray of the WFOV defines the secondary pointing axis **332**. The secondary drive system **400** is disposed between the optical bench **305** and the secondary video camera **315** for rotating the secondary video camera **315** with respect the optical bench **305**.

[0049] The secondary telescopic lens system **375** comprises a two germanium element fixed field of view lens system. A secondary focal plane array **385** shown in FIG. **9**, comprising a plurality of active image sensors disposed over an active area and is positioned in a focal plane of the secondary telescopic lens system **375** such that the secondary telescopic lens system **375** forms a focused image of the target area **325** that fills the active area. The secondary video camera **315** may also include an automated shutter adjusting system for varying the stop aperture size in order maintain irradiance levels at the secondary focal plane array within usable limits as well as for closing the shutter to perform a focal plane array response uniformity calibration.

[0050] The secondary focal plane array **385** is a microbolometer resistance change device configured to generate a photo current in response to long-range infrared radiation falling thereon, e.g. radiation with a wavelength of 8-12 microns. More specifically, the secondary focal plane array comprises an array of 640×480 silicon detector elements operating at ambient temperature.

Color Day Camera

[0051] The third video camera **335** comprises a visible wavelength video camera or color day camera usable to render a color image of the target area **325** in the visible spectrum, e.g. radiation with a wavelength range of 400-700 nanometers. The color day camera **335** includes a fixed magnification visible lens system **392** having an 8 mm effective focal length and a field of view approximately encompasses a solid angle **380** of 35 degrees horizontally and 27 vertically. The visible lens system **392** is a fixed focal length lens system and is positioned to form a substantially focused image of the target area **325** onto a color day focal plane array, not shown, such as a conventional visible color sensitive charged coupled device (CCD). The color day camera **335** also includes automated systems for varying its configuration and operating mode according to irradiance levels at the CCD in order to generate a useful image over a wide range of daylight light levels. In particular, the third video camera **335** may comprise a camera model 20K155DIG sold by VIDEOLOGY of Greenville R.I., USA, or a camera model KPC-520C sold by KT&C of Seoul, South Korea.

LR/D

[0052] Referring now to FIGS. **3**, **5** and **7**, a laser rangefinder system comprises two elements separately disposed within the payload assembly. A first element comprises a laser rangefinder transmitter **340** for transmitting a laser rangefinder beam **425**. A second element comprises a laser rangefinder receiver **430** disposed inside a laser designator module **345**. The laser rangefinder receiver **430** is disposed inside the laser designator module **345** to utilize its large aperture telescopic lens system **390** which it shares with the designator laser **346**.

[0053] The laser target designator module **345** comprises a designator laser **346** and laser pumping elements, not shown. Preferably, the designator laser **346** is configured as a pumped neodymium YAG solid state laser operating to emit radiation pulses at a radiation wavelength of approximately 1064 nanometers. Preferably the designator laser **346** generates pulses having a minimum duration of 10 nanoseconds modulated at a frequency of 10-20 pulses per second with a pulse energy of greater than 30 mJ. Preferably the designator laser **346** is pumped by a laser diode; however, other pumping sources such as flash lamps are usable. Pulses emitted by the designator laser **346** pass through a beam splitter **415** and are directed by mirrors **410** through the large aperture telescopic lens system **390** to generate a substantially collimated designator beam **416**. Preferably the beam splitter **415** is a dichroic filter configured with a high spectral transmittance substantially centered at the output wavelength of the designator laser which is approximately centered at 1064 nanometers. In the present example embodiment, the laser target designator module **345** is fixedly mounted to the disk shaped side section **250**. Optionally, the laser target designator module **345** may be mounted to the optical bench **305**. In either case, the orientation of the laser target designator module **345** is adjusted to coaxially align a pointing axis of the designator beam **416** with the primary pointing axis **130**. Alternately, the designator beam **416** may be used as the primary pointing axis **130** with other elements of the optical payload being bore-

sighted to co-align with the designator beam **416**. Accordingly, the laser designator beam **416** may be used to illuminate target areas being imaged by the primary video camera **310**. The large aperture telescopic lens system **390** is configured with a large aperture, e.g. 50-90 mm, to produce a designator beam **416** having a large enough diameter to produce a desired low beam divergence angle while the designator laser **346** is designed with laser radiation energy output levels as required to illuminate a desired target size at a desired target range.

[0054] The laser rangefinder transmitter module **340** comprises a compact pulsed rangefinder laser **341** such as an Erbium (Er) glass laser pumped by a laser diode and operating to emit radiation pulses at an eye-safe radiation wavelength, i.e. a range of 1500 to 1800 nanometers. Preferably the laser **341** generates laser pulses having a wavelength approximately centered at 1535 nm with pulse durations ranging from 5 to 25 nanoseconds and with a pulse energy ranging from 2 to 8 mJ. The laser rangefinder transmitter module **340** further includes a small aperture telescopic lens system **342** suitable for generating a substantially collimated rangefinder beam **425**. The rangefinder laser transmitter module **340** is fixedly attached to the optical bench **305** and adjusted to coaxially align a central ray of the collimated rangefinder beam **425** with the primary pointing axis **130** such that the laser rangefinder beam **425** is directed at the target area **320** and is pointed by the primary drive system **600**.

[0055] After reflecting from a target area, a portion of the energy of the laser rangefinder beam **425** is reflected back to the optical payload **100** and collected by the large aperture telescopic lens system **390**. The reflected energy is directed onto a laser rangefinder receiver module **430**, by the mirrors **410** and the beam splitter **415**. Accordingly the beam splitter dichroic filter is further configured with a high spectral reflectance substantially centered at the output wavelength of the rangefinder laser **341**, which is approximately centered at 1535 nanometers. The collection optics further include a focusing lens set **420** that focuses the collected energy onto an active area of the rangefinder receiving module **430**. The rangefinder receiving module **430** comprises a pin diode or the like, which generates a photocurrent in response to radiation falling thereon. The photocurrent is communicated to a signal process **424** for digital signal processing.

[0056] The combined laser rangefinder module **340** laser target designator module **345** further includes a fiber optic element **422** that extends between the rangefinder laser **341** and the laser target designator module **345**. A first end of the fiber optic element **422** is disposed inside the rangefinder laser **341** at a location that couples a portion of the energy of each rangefinder laser output pulse into the first end of the fiber optic element **422**. A second end of the fiber optic element **422** is disposed inside the laser target designator module **345** at a location that directs energy being emitted from the second end of the fiber optic element **422** onto receiver module **430** and particularly at the active area thereof. Accordingly, the fiber optic element **422** directs rangefinder laser output pulse energy onto the receiver module **430** and the photo diode generates a photocurrent responsive to each rangefinder laser output pulse. The photocurrent is communicated to a signal processor **424** for digital signal processing. The processor **424** is included on the payload controller **720**.

[0057] Accordingly, the signal processor **424** processes first signals responsive to each output pulse of the rangefinder laser **341** and second signals responsive to each rangefinder laser pulse that is reflected back from the target area. Generally the signal processor **424** calculates a range from the target area to the optical payload **100** according to a temporal separation between output pulses of the rangefinder laser **341** and rangefinder laser pulses that are reflected back from the target area. The calculation may be made using clock signals generated by the signal processor **424** or by another signal processor to determine the temporal separation.

[0058] Specifically according to the present invention, by sharing the large aperture telescopic lens system **390** between the laser target designator module **345** and the laser rangefinder transmitter module **340**, the volume footprint of the combined laser target designator and laser rangefinder is reduced in order to reduce the spherical diameter of the payload assembly **110**. Moreover, a second benefit is gained by sharing the large aperture telescopic lens system **390** between the laser target designator and the laser rangefinder. Specifically, the large aperture telescopic lens system **390** collects more radiation energy from the target area than can be collected by a smaller aperture telescope, e.g. the small aperture telescopic lens system **342**, such that by collecting laser rangefinder beam energy reflected back from the target area with the large aperture telescopic lens system **390** the useful range of the laser rangefinder is increased. According to the invention, the aperture diameter of the large aperture telescopic lens system **390** is selected as required to collimate the target designator beam **425** with a divergence angle that is small enough to illuminate a target of a specific size at a specific maximum range. However, since the large aperture telescopic lens system **390** is used to collect reflected laser rangefinder energy, the maximum range of the laser rangefinder is increased as well.

Secondary Drive.

[0059] Referring now to FIG. **6**, the secondary video camera **315** and elements of the secondary drive system **400** are shown in exploded isometric view. The secondary drive **400** comprises a pivot bracket **440**. The pivot bracket **440** is a solid unitary structural member, such as a metal cast element, having a top arm **445**, and a pair of opposing side arms **450**, **455** extending substantially orthogonally from the top arm **445**.

[0060] The top arm **445** includes a mechanical coupling **460** fixedly installed therein such as by a press fit. The mechanical coupling **460** is formed by an annular wall surrounding a longitudinal bore **465**. The bore **465** is oriented substantially parallel with the azimuth axis A. A secondary azimuth motor **470** comprises a motor body **475** and a rotatable drive shaft **480** extending out there from. The rotatable drive shaft **480** installs into the bore **465** and is fixedly coupled to the mechanical coupling **460**. The motor body **475** is fixedly attached to the optical bench **305**. A drive current applied to the secondary azimuth motor **470** causes the rotatable shaft **480** and the pivot bracket **440** to rotate with respect to the optical bench **305**. The rotation is about an axis that is substantially parallel with the azimuth axis A. The top arm **442** may include a curved slot **442** with adjustable end stops, such as may be provided by the threaded fasteners **485**, for setting rotation end stops.

[0061] The side arms **450** and **455** each include a rotary bearing or bushing **490** and **495** fixedly installed therein. Each bearing **490**, **495** includes an annular wall surrounding a longitudinal bore **505** and **510**. The bores **505** and **510** are oriented coaxially along an axis that is substantially parallel

with the elevation axis E when the pivot bracket **440** is at the center of its rotational range. The secondary video camera **315** includes pivot pins **515** and **520** extending out therefrom and fixedly attached thereto for installing into the coaxial bores **505** and **510** to thereby pivotally support the secondary video camera **315** with respect to the pivot arm **440**. The rotation is about an axis that is substantially parallel with the elevation axis E when pivot bracket **440** is at the center of its rotational range.

[0062] The side arm **450** is formed with a circular mounting flange **525**. The flange **525** is configured to support a secondary elevation motor **530**. The secondary elevation motor **530** comprises a motor housing **535** and a rotatable drive shaft, not shown, extending out from the motor housing. The rotatable drive shaft installs into a drive gear **545** and is fixedly attached thereto so that rotation of the drive shaft **540** rotates a drive gear **545**. The drive gear **545** meshes with a driven gear **550** which is fixedly attached to the pivot pin **515**. A drive current applied to the secondary elevation motor **530** causes the elevation motor **530** and its rotatable shaft to rotate the drive gear **545** with respect to the side arm **450**. Rotation of the drive gear **545** drives the driven gear **550** which causes the secondary video camera **315** to rotate about an axis that is substantially parallel with the elevation axis E when the pivot bracket **440** is at the center of its rotational range.

[0063] The above-described rotations of the secondary video camera **315** allow the secondary pointing axis **332** to be pointed independently from the primary pointing axis **130**. Preferably the secondary video camera **315** is rotated over rotation angles approximately limited to plus or minus one half the solid angle fields of view of the secondary video camera **315**. More specifically, the secondary drive system **400** is initially assembled and aligned to point the secondary pointing axis **332** substantially coaxial with the pointing direction of the primary pointing axis **130**. The secondary drive **400** is configured to rotate the pivot bracket **440** and secondary video camera **315** approximately over plus or minus 20 degrees using the secondary azimuth motor **470** in order to change the azimuth angle of the secondary pointing axis **332** with respect to the azimuth angle of the primary pointing axis **130**. The secondary drive system **400** is further configured to rotate the secondary video camera **315** approximately over plus or minus 15 degrees using the secondary elevation motor **530** in order to change the elevation angle of the secondary pointing axis **332** with respect to the elevation angle of the primary pointing axis **130**. In addition, each of the secondary azimuth motor **470** and secondary elevation motor **530** includes an angular position resolver included therein or otherwise associated therewith for providing electrical signals in proportion to angular orientation of the secondary video camera **315** or the pointing axis **332**.

[0064] Referring to FIGS. **4**, **9** and **10**, a top view of the payload assembly **110** is shown schematically to demonstrate rotation of the primary and secondary cameras about the azimuth axis A. The description is substantially identical for rotation about the elevation axis E except that vertical fields of view may be slightly narrower for each camera. According to the present invention, the primary drive **600** operates to rotate the spherical payload **110** in two axes to rotate the primary pointing axis **130** and every other pointing axis of the payload system simultaneously. Meanwhile, each of the three video cameras is rendering video images with the primary video camera **310** rendering a video image of the primary target area **320** and the second video camera **315** and the third video camera **335** are each rendering a video image of the target area **325**. Thus an operator viewing the video image of the secondary target area **325** can detect smaller target areas **320** that may be of interest and direct the primary pointing axis **320** at a selected smaller primary target area **320**. Meanwhile, the secondary drive **400** may be operated in a counter slew mode in which the secondary drive system **400** is operated to offset small rotations by the primary drive system **600** by applying equal and opposite rotations to the secondary video camera **315**. The equal and opposite rotations cause the secondary pointing axis **332** to remain substantially centered on the secondary target area **325** thereby causing the image of the secondary target area **325** to remain substantially unchanged as the primary camera **310** is rotated to render an image of the selected target area **320**. In addition, the optical bench assembly **300** includes gyroscopic stabilizing elements **353**, **355** operating in cooperation with the primary drive system **600** to simultaneously stabilize the pointing direction of the primary pointing axis **130**.

Electrical Control System and FIGS. 10-12

[0065] Referring now to FIGS. **4**, **10-12**, and **15**, elements of a payload electrical control system **700** are shown in an exploded isometric view in FIGS. **10** and **11** and in schematic views in FIGS. **12** and **15**. The electrical control system **700** includes all the electrical systems required to operate the optical payload **100** autonomously and to output video and other signals to a radio **705**, carried by the UAV or other support structure **145**. The radio **705** broadcasts the output signals to one or more remote radio stations **710** and receives command and control signals from the one or more remote radio stations **710**. As shown in FIGS. **12** and **15**, the radio **705** and remote stations **710** operate to exchange command and control signals and the radio **705** delivers appropriate command and control signals to the payload electrical control system **700**. In addition, each remote radio station **710** may include a video display device **715** and user interface controls **721** operable to view live video images received from the optical payload **100** and specifically to view images from two of the three payload cameras **310**, **315** and **335** simultaneously. In addition, a user operating the interface controls **721** can command the optical payload **100** remotely to point either of the pointing axes **130** or **332** at a target area **325** or a selected target **320** and to select which two live camera images to receive from the payload assembly and display on the video display device.

[0066] The electrical system **700** is configured to continuously operate the primary video camera **310** and to continuously deliver images rendered by the primary video camera **310** to the radio **705** a wireless network protocol such as wireless Ethernet. Moreover, the images rendered by the primary video camera are network packeted for delivery to a first network IP address associated with which ever remote radio station **710** is sending command and control signals to the optical payload and more specifically the first IP address is exclusively associated with the primary video images.

[0067] The electrical system **700** includes a switch or multiplexer, not shown, mounted on the optical payload controller **720**. The switch or multiplexer is in communication with each of the secondary video camera **315** and the tertiary video camera **335**. Using the multiplexer, a user at the remote radio station **710** can command the optical payload to operate and transmit video images rendered by either the secondary or tertiary video camera but not both. Once one of the secondary

or tertiary cameras is selected, the selected camera is operated and the system **700** is configured to operate the selected video camera **315** or **335** and to continuously deliver images rendered by the secondary video camera **315** or **335** to the radio **705** using a wireless network protocol such as wireless Ethernet. Moreover, the images rendered by the selected video camera **315** or **335** are network packeted for delivery to a second network IP address associated with whichever remote radio station **710** is sending command and control signals to the optical payload and more specifically the second IP address is exclusively associated with the video images of the selected camera.

[0068] The electrical system **700** is further configured to track video targets in both video images being transmitted to the remote radio station **710**, to determine target ranges, target geo-locations, target temperatures and other data about the target area as may be required and to generate target meta data. The target meta data may comprise video overlays such as a cursor text box and or graphical data display that is updated in each video frame. Accordingly, the electrical system **700** is further configured to network packetize the target meta data for delivery to a third network IP address associated with whichever remote radio station **710** is sending command and control signals to the optical payload. Specifically the third IP address may be used as the IP address for all target meta data as well as any command and control signals that are exchanged between the optical payload and remote radio station **710** is sending command and control signals to the optical payload.

[0069] Generally, the electrical system **700** includes various digital processors configured or programmed for video image signal processing as may be required to correct the video signals, to make signal value offsets and gain adjustments for reducing signal noise, to adjust brightness and contrast to desired levels, to replace dead pixels with data values predicted from surrounding pixel data values, and to enhance image detail such as by sharpening edges or the like. In addition, the video image rendered by each camera is scaled to a desired display format size prior to transmission or at the remote radio station. In the preferred embodiment, target meta data in the form of text and graphics overlay data is not combined with the video image data in the payload but sent to the third IP address at remote station for remote combination with the video images. However, the meta data can be combined with the video images by the electrical system **700**. In addition, the electrical control system **700** operates to compress the video data of the primary video image and the selected video image and to merge the two compressed images into a single wireless network packeted data stream. The electrical system **700** further includes an Ethernet switch **816**, which operates cooperatively with a communication processor **820** and the radio **705**. The communications processor **820** configures and routes network data packets exiting the payload to the intended IP address as well as receives incoming network data packets and routes the data to a master controller PC board **760**, described below.

[0070] The electrical system **700** further operates the primary drive system **600** in a manner that directs the primary pointing axis **130** at a target area **325** and at selected targets **320** and steers the primary pointing axis **130** in order to keep the target area within the field of view of the primary video camera **310** even as the optical payload **100** is being carried by a moving aircraft or vehicle. In addition, the electrical system **700** includes gyro stabilizing elements **353** and **355**, housed inside the spherical payload assembly **110**, for providing gyro stabilizing signals usable to stabilize the pointing direction of the primary pointing axis **130**.

[0071] The electrical system **700** further operates the secondary drive system **400** in a manner that directs the secondary pointing axis **332** at a target area and steers the secondary pointing axis **332** in order keep the target area within the field of view of the secondary video camera **315** even as the primary pointing axis is being actively pointed by the primary drive system **600**.

[0072] As shown in FIGS. **10** and **11**, the electrical control system **700** comprises a plurality of interconnected electrical sub modules, and individual electrical components disposed within the spherical payload assembly **110** and or within the yoke assembly **105**. The electrical control system **700** can be mechanically divided into two portions, namely electrical sub systems housed within the spherical payload assembly **110** and electrical sub systems housed within the yoke assembly **105**. The two portions are electrically interconnected by a conventional slip ring assembly **330**. The slip ring assembly **330** is included as a component of the elevation drive and rotary joint **140** and provides opposing conductive rings with one fixed to the yoke assembly and the other rotating with the spherical payload. The rings remain in electrical contact with each other as the elevation drive and rotary joint **140** is rotated and provide an uninterrupted electrical interconnection between elements housed inside the spherical payload assembly **110** and elements housed inside the yoke assembly **105**. In addition, the elements inside the yoke assembly **105** are in communication with the radio transceiver **705** which is carried by the UAV or other support structure **145**.

[0073] Referring to FIG. **10**, the electrical subsystems housed inside the spherical payload assembly **110** include a payload controller **720**; a secondary drive system controller **725**, and additional electrical components and or sub systems that are associated with the three video cameras **310**, **315**, **335**, and with the laser target designator and laser rangefinder systems. The payload controller **720** interfaces with all of the electrical components and sub systems housed inside the spherical payload assembly **110** to control the operation of the spherical payload assembly **110** and communicate with electrical subsystems not housed inside the payload assembly **110** through the slip ring assembly **330**. In particular, payload controller **720** includes a first microprocessor for controlling the primary camera and for reading out video data from the primary focal plane array. The payload controller **720** also controls operations of and data processing and communication related to the laser target designator module **345** and laser rangefinder transmitter module **340**.

[0074] Referring to FIGS. **10** and **11**, the electrical subsystems housed inside the yoke assembly **105** included four circular PCB's **750**, **755**, **760**, **765** configured to fit within the electronics cavity **160** stacked one above another and electrically and mechanically interconnected. In addition, the electrical subsystems housed inside the yoke assembly **105** include a plurality of power supplies **730** disposed around the upper bracket **165** and a power supply **735** disposed in the yoke arm **215**. The electrical subsystems housed inside the yoke assembly **105** also include an azimuth motor driver **740** which is disposed inside the electrical cavity **160** attached to the thin annular wall **155** proximate to the upper bracket **165** and an elevation motor driver **745** disposed in the yoke arm **210**.

[0075] The four circular PCB's include a primary servo controller **750**, for controlling the pointing direction of the primary pointing axis **130**, a video encoder **755**, for compressing video data from all three camera systems, a master controller **760**, for receiving video data from all three camera systems and communicating the video data from two images at a time to an Ethernet switch **816** and associated communication processor **820**, and a dual channel tracker **765**, which includes a primary channel for tracking the primary pointing axis **130** and a secondary channel for tracking the secondary pointing axis **332**.

[0076] The payload controller **720** includes a commercially available field programmable gate array (FPGA), not shown, e.g. manufactured by XILINIX Inc. of San Jose Calif., USA. In addition, the payload controller **720** includes a digital microprocessor, e.g. a Power PC 405, memory components, at least comprising short term memory registers, a clock signal or timing generator, and other components as may be required to perform operations according to program steps operating on the FPGA. The payload controller **720** further includes additional non-volatile memory devices such as flash memory and electrically erasable programmable memory (EEPROM) for storing the program steps and other data which may be loaded into the FPGA on power up and used to manage the operation of elements housed inside the spherical payload assembly **110** and to exchange data and commands with the master controller **760** through the slip ring assembly **330**. The payload controller **705** further includes a universal asynchronous receiver/transmitter (UART) used to serialize data exchanged between the payload controller **720** and the master controller **760**, as well as other input and output serial communication channels such as a joint test action group JTAG connector interfaced with the Power PC 405 for outputting test and raw data to a test device **814**, and a state machine operating on the FPGA for controlling each of the laser target designator module **345** and laser rangefinder transmitter module **340**.

[0077] The payload controller **720** operates to generate clock signals which are communicated to the primary camera **310** in order to initiate readouts of primary focal plane array according to a frame rate. The second and third cameras **315** and **335** include clock signal generators and readout electronics within the camera systems. The primary video camera **310** and third video camera **335** are operated with a frame rate of approximately 60 Hz and the secondary video camera **315** is operated with a frame rate of approximately 30 Hz. Video data from the video camera **310** is read out and serialized by the payload controller FPGA before being sent to the master controller **760** in RS 422 format.

[0078] The payload controller **720** further operates to exchange commands and state data with each of the three video cameras **310**, **315**, **335**. The commands and state data may comprise on/off commands, camera system mode or state change commands, camera system status updates, and other conditions of the camera systems such as temperature, power usage, illumination levels, etc. In addition, the payload controller **720** communicates with the IDCA **370** and the telescope **350** to control and monitor their operating states.

[0079] Referring to FIGS. **12** and **15**, the flow of video data through the payload electrical control system **700** is shown in schematic view. Starting with the primary video camera **310** video, primary camera data frames are read out directly to the payload controller **720** which serializes the primary data frames and delivers them to the master controller **760** over a first video channel **761**. The master controller **760** includes a first digital processor **804** such as a field programmable gate array, (FPGA) that receives the serialized primary data frames from the payload controller **720** and makes offset/gain and dead pixel replacement corrections and then outputs the corrected serialized primary data frames to the video encoder PC board **755** for data compression and to the tracker PC board **765** for tracking and meta data generation. The video encoder PC board **755** includes a third digital processor such as a digital signal processor, (DSP) or application specific integrated circuit (ASIC) **806** mounted thereon. The third digital processor **806** compresses the corrected serialized primary data frames and delivers compressed corrected primary data frames to the Ethernet switch **816** which operates in cooperation with the specialized communications processor **820** to packetize the primary data frames with each data packet being addressed to the first IP address associated with the remote station **710** before communicating packetized data to the radio transceiver **705**. Alternately, the FPGA **804** may communicate uncompressed video data directly to the Ethernet switch **816** e.g. by disabling video data compression programs running on the third digital process **806**. A second output channel from the FPGA **804** delivers the serialized primary data frames to a primary tracker **808** mounted on the dual channel tracker PC board **765**. The primary tracker **808** generates tracking meta data related to the primary data frames and delivers the primary tracking meta data to the communications process **820** which packetizes the primary tracking meta data with each data packet being addressed to the third IP address associated with the remote station **710** before communicating packetized primary tracking meta data to the radio transceiver **705**.

[0080] With respect to the secondary video camera **315** and the tertiary video camera **335**, data frames from the selected camera **315** or **335** are passed through multiplexor mounted on the payload controller **720** to the master controller **760** which includes a second digital processor **812** such as an FPGA that receives the serialized data frames from the payload controller **720** and, if necessary, makes video corrections and then outputs corrected serialized secondary data frames to the video encoder PC board **755** for data compression and to the tracker PC board **765** for tracking and meta data generation. The video encoder PC board includes a fourth digital processor **818**, such as a DSP or ASIC, mounted on the video encoder PC board **755**. The fourth digital processor **818** compresses the corrected serialized data frames of the selected camera and delivers the compressed data frames from the selected camera to the Ethernet switch **816**, which operates in cooperation with a specialized communications processor **820** to packetize the selected camera data frames with each selected camera data packet being addressed to the second IP address associated with the remote station **710** before communicating packetized data to the radio transceiver **705**. Alternately, the FPGA **812** may communicate uncompressed video data directly to the Ethernet switch **816** e.g. by disabling video data compression programs running on the fourth digital processor **818**. A second output channel from the second digital process **818** delivers the serialized secondary data frames to a secondary tracker **810** mounted on the dual channel tracker PC board **765**. The secondary tracker **810** generates tracking meta data related to the data frames of the selected video camera and delivers the secondary tracking meta data to the communications process **820** which packetizes the secondary tracking meta data with each data packet

being addressed to the third IP address associated with the remote station **710** before communicating packetized primary tracking meta data to the radio transceiver **705**.

[0081] While the master controller PC board **760** described above includes first and second digital signal processor **804** and **812** for separately processing two separate video images, a preferred embodiment utilizes a single digital video image processor **805** configured to receive video image data from the primary video camera **310** and the selected video camera **315** and **335** and to operate in a multiplex mode to process both the primary video image and the selected video image and to deliver the primary video data to the third digital processor **806** for compression and the primary tracker **808** for tracking and to deliver the selected video image to the fourth digital processor **818** for compression and to the secondary tracker **810** for tracking.

[0082] Accordingly, when the primary and secondary video cameras are selected for viewing the Ethernet switch **816** in cooperation with the communications process **820** merges the primary video image addressed to the first IP address, the secondary video image, from the second video camera **315** addressed to the second IP address, and the tracking meta data addressed to the third IP address into a single packetized network data stream such that the payload system **100** simultaneously communicates two display formatted video images and a meta data file to the radio **705** for transmission to the remote station **710** associated with the first second and third IP addresses.

[0083] Similarly, when the primary and tertiary video camera are selected for viewing the Ethernet switch **816** in cooperation with the communications process **820** merges the primary video image, addressed to the first IP address, the tertiary video image from the third video camera **335**, addressed to the second IP address, and the tracking meta data addressed to the third IP address into a single packetized network data stream such that the payload system **100** simultaneously communicates two display formatted video images and a meta data file to the radio **705** for transmission to the remote station **710** associated with the first, second, and third IP addresses.

[0084] Preferably, the network packetized data stream is configured with a wireless Ethernet network protocol, however, any other wireless protocol suitable for transmission over the onboard radio **705** is usable without deviating from the present invention. In addition, each of the DSP's **806** and **818** delivers compressed video data to a scaling and overlay processor **822** operating on the master controller **760**. The scaling and overlay processor **822** prepares the video data for local display, e.g. when the UAV is on the ground and or being used in evaluation in test mode e.g. on the test station **814**. Alternately, uncompressed video can be delivered to the local display.

[0085] The communication processor **820** may include a specialized data communications processor such as a MPC8247: Power QUICC II Integrated Communication Process manufactured by Freescale Semiconductor of Austin Tex., USA. The data communications processor combines a core digital data processor, such as a PowerPC **603**, and a RISC based communication processor with internal memory elements, a clock signal generator, and various interface and control modules and is programmed to operate in cooperation with the Ethernet switch **816** or another network switch. Each of the video compression DSP's **806** and **818** communicates video data to the Ethernet switch **816** and each of the trackers **808** and **810** communicates tracking meta data to the communication processor **820** and the data from both sources is merged in the network packetized data stream described above. In an alternate embodiment, a fourth IP address can be used to deliver tracking meta data associated with each of the video images to separate a IP address.

[0086] Referring now to FIG. **11**, the circular PC boards **750**, **755**, **760** and **765** are shown in exploded view with electrical and mechanical interface hardware shown in detail. Each circular PC board has an outsider diameter defined by a circular peripheral edge **855** and opposing top and bottom opposing surfaces. The outside diameter is sized to substantially fill the inside diameter of the thin annular wall **155** and the circular PC boards are assembled together as a stack and installed into the hollow electrical cavity **160** with the top and bottom surfaces of each PC board substantially normal to the azimuth axis A.

[0087] Each circular PC board includes a plurality of thermally conductive pads **850**, such as an exposed copper layer of the PC board, disposed equally spaced around its peripheral edge **855** on top and bottom surfaces thereof. More specifically each. PC board includes an internal layer of copper or other thermally conductive material substantially over its entire area and the conductive pads **850** are exposed portions of the conductive internal layer. A plurality mounting blocks **860** are disposed between opposing PC boards at locations corresponding with the conductive pad **850**. In addition, a plurality of bottom mounting blocks **865** are disposed at locations corresponding with conductive pads **850** formed on the bottom surface of the bottom PC board **765**. Each mounting block comprises a thermally conductive material or otherwise provides a thermally conductive path through the mounting block. In addition, a plurality of thermally conductive and electrically insulating spacers may be disposed between the conductive pads **850** and the mounting blocks **860** and **865** between the PC boards and the mounting blocks.

[0088] Each mounting block **860** as well as each conductive pad **850** and each spacer **870** includes a through hole **875** passing through the block, conductive pad or spacer. The through holes are substantially parallel with the azimuth axis A, or longitudinal, and a plurality of longitudinal mounting screws **880**, one corresponding with each conductive pad location, installs through the aligned holes **875** and engages with a threaded hole **880** formed in each bottom mounting block **865** such that the longitudinal mounting screws **880** align the PC boards with the mounting blocks **860** and **865** and providing a longitudinal clamping force that claims the PC boards between opposing mounting blocks into a stack separated by mounting blocks **860** and spacers **870** so that a substantially continuous thermally conductive path extends longitudinally along each longitudinal mounting screw **880** to allow thermal energy to be conducted between PC boards to prevent local overheating. In addition some of the PC boards may include a center through hole defined by an inner diameter **894** as may be required to avoid contact with other elements such as components of the azimuth drive and other longitudinal mounting screws **885** may pass through the PC boards and through hollow spacers **890** disposed between PC boards to further secure the PC boards in place and increase mechanical stiffness of the PC board stack.

[0089] In addition to assembling the plurality of PC boards **750**, **755**, **760**, **765** into a stack using mounting longitudinal screws **880** and **885**, the PC boards are electrically interconnected with each other using a plurality of multi-pin connec-

tors **895** and electrically connected with other electrical systems using one or more edge connectors **900**. Thereafter, the entire stack may be lowered into the hollow electrical cavity **160** and a plurality of threaded nuts **905** disposed to mate with each of the mounting blocks **860** and **865** are aligned with corresponding through holes **910**, shown in FIG. **10**, formed to pass through the thin annular wall **155** such that mounting screws, not shown, can be installed through each hole **910** and each mounting block **860** and **865** to engage with each threaded nuts **905** to support the stack of PC boards **750**, **755**, **760**, **765** inside the hollow electrical cavity **160**.

[0090] According to the present invention, thermal energy generated by each of the PC boards **750**, **755**, **760**, **765** is thermally conducted by the conductive internal layer along radial paths to each of the conductive pads **850** to each of the mounting blocks **860**/**865** and then to the thin annular wall **155** which is exposed to external airflow. The excess thermal energy is then dissipated by the convective and radiant heat transfer between the thin annular wall **155** and the external airflow.

[0091] It will also be recognized by those skilled in the art that, while the invention has been described above in terms of preferred embodiments, it is not limited thereto. Various features and aspects of the above-described invention may be used individually or jointly. Further, although the invention has been described in the context of its implementation in a particular environment, and for particular applications, those skilled in the art will recognize that its usefulness is not limited thereto and that the present invention can be beneficially utilized in any number of environments and implementations including but not limited to payload systems that include fewer or more electro-optical systems or combinations thereof. Accordingly, the claims set forth below should be construed in view of the full breadth and spirit of the invention as disclosed herein.

1. An optical payload, comprising:

a laser rangefinder transmitter module comprising a rangefinder laser configured to emit a pulsed laser rangefinder beam and a small aperture telescopic lens system configured to substantially collimate and point the laser rangefinder beam at a target area;

a laser target designator module comprising a designator laser configured to emit a pulsed laser target designator beam, a large aperture telescopic lens system configured to substantially collimate and point the designator beam at the target area, a laser rangefinder receiver module, first optical elements disposed along a first optical path between the large aperture telescopic lens system and the designator laser configured to direct the pulsed laser target designator beam from the designator laser to the large aperture telescopic lens system; and,

second optical elements disposed along a second optical path between the large aperture telescopic lens system and the laser rangefinder receiver module configured to direct energy of the pulsed laser rangefinder beam that is reflected by the target area and collected by the large aperture telescopic lens system onto the laser rangefinder receiver module;

wherein both the first optical elements and the second optical elements include a beam splitter, wherein the beam splitter and the first and second optical elements are configured to direct the laser target designator beam from the laser target designator module to the large aperture telescopic lens system and to direct the energy of the pulsed laser rangefinder beam that is reflected by the target area and collected by the large aperture telescopic lens system to the laser rangefinder receiver module, and wherein the beam splitter comprises a dichroic filter configured with a maximum spectral transmission substantially matched with a spectral emission of the designator laser and further configured with a maximum spectral reflectance substantially matched with the spectral emission of the rangefinder laser.

2. The optical payload of claim **1** wherein the rangefinder laser has a spectral output in the range of 1500 to 1800 nanometers.

3. The optical payload of claim **2** wherein the rangefinder laser has a spectral output substantially centered at 1535 nanometers.

4. The optical payload of claim **3** wherein the rangefinder laser comprises an Erbium glass rod pumped by one or more pumping sources.

5. The optical payload of claim **4** wherein the rangefinder laser is configured to generate laser pulses having pulse durations ranging from 5 to 25 nanoseconds with pulse energies ranging from 2 to 8 mJ.

6. The optical payload of claim **1** wherein the designator laser has a spectral output substantially centered at 1064 nanometers.

7. The optical payload of claim **6** wherein the designator laser comprises a neodymium-doped yttrium aluminum garnet laser crystal pumped by one or more pumping sources.

8. The optical payload of claim **7** wherein the designator laser is configured to generate laser pulses having a minimum pulse duration of 10 nanoseconds and a minimum pulse energy of 30 mJ.

9. The optical payload of claim **8** wherein the designator laser is modulated to emit laser pulses at a frequency ranging from 8 to 20 pulses per second.

10. The optical payload of claim **1** wherein the laser rangefinder transmitter module and the laser target designator module are mechanically independent modules.

11. The optical payload of claim **1** wherein the beam splitter is configured to transmit the laser target designator beam and to reflect the energy of the pulsed laser rangefinder beam that is reflected by the target area.

12. The optical payload of claim **11** wherein the first optical elements further comprise two mirrors disposed between the beam splitter and the large aperture telescopic lens system.

13. The optical payload of claim **11** wherein the second optical elements further comprise a mirror and a focusing lens set for focusing the energy of the pulsed laser rangefinder beam that is reflected by the target area onto an active area of the laser rangefinder receiver module.

14. (canceled)

15. The optical payload of claim **1** further comprising a fiber optic element extending between the laser rangefinder transmitter module and the laser designator module for directing at least a portion of the energy of each pulse of the laser rangefinder beam onto an active area of the laser rangefinder receiver module.

16. The optical payload of claim **15** further comprising a signal processor in communication with the laser rangefinder receiver module for processing photo current signals generated thereby.

17. A method for operating an optical payload, the method comprising:

emitting a pulsed laser rangefinder beam from a laser rangefinder transmitter module;

collimating the pulsed laser rangefinder beam and directing the collimated pulsed laser rangefinder beam onto a target area using a small aperture telescopic lens system attached to the laser rangefinder transmitter module;

collecting energy of the collimated pulsed laser rangefinder beam that is reflected by the target area using a large aperture telescopic lens system and directing energy collected thereby onto a laser rangefinder receiver module;

emitting a pulsed laser target designator beam from a designator laser housed within a laser target designator module;

collimating the laser target designator beam and directing the collimated laser target designator beam onto the target area using the large aperture telescopic lens system;

coupling energy from the laser rangefinder beam into a first end of a fiber optic element and directing a second end of the fiber optic element onto an active area of the laser rangefinder receiver module to generate a first photocurrent in response to laser rangefinder beam pulses;

generating a second photocurrent response to the laser rangefinder beam energy that is reflected by the target area and collected by the large aperture telescopic optical system;

communicating each of the first and second photocurrent responses to a signal processor;

calculating a range from the payload to the target area according to a temporal separation between the first and second photocurrent responses;

wherein the large aperture telescopic lens system and laser rangefinder receiver module are housed in the laser target designator module; and,

wherein the laser rangefinder transmitter module and the laser target designator module are mechanically independent modules.

18. (canceled)

19. (canceled)

20. The method of claim **17**, further comprising:

capturing first images, with a narrow field of view, at a first infrared wavelength range of the target area;

capturing second images, with a wide field of view, at a second infrared wavelength range of the target area, wherein the first and second infrared wavelength ranges are substantially different, and wherein the narrow field of view and the wide field of view may be independently pointed to the target area; and

capturing third images at a visible wavelength range of the target area.

21. The method of claim **17**, wherein the directing the energy onto the laser rangefinder receiver module and the directing the collimated laser target designator beam comprises using a dichroic filter configured with a maximum spectral transmission substantially matched with a spectral emission of the designator laser and further configured with a maximum spectral reflectance substantially matched with the spectral emission of the pulsed laser rangefinder beam.

22. An optical payload, comprising:

a laser rangefinder transmitter module comprising a rangefinder laser configured to emit a pulsed laser rangefinder beam and a small aperture telescopic lens system configured to substantially collimate and point the laser rangefinder beam at a target area;

a laser target designator module comprising a designator laser configured to emit a pulsed laser target designator beam, a large aperture telescopic lens system configured to substantially collimate and point the designator beam at the target area, a laser rangefinder receiver module, first optical elements disposed along a first optical path between the large aperture telescopic lens system and the designator laser configured to direct the pulsed laser target designator beam from the designator laser to the large aperture telescopic lens system;

second optical elements disposed along a second optical path between the large aperture telescopic lens system and the laser rangefinder receiver module configured to direct energy of the pulsed laser rangefinder beam that is reflected by the target area and collected by the large aperture telescopic lens system onto the laser rangefinder receiver module; and

a fiber optic element extending between the laser rangefinder transmitter module and the laser designator module configured to direct at least a portion of the energy of each pulse of the laser rangefinder beam onto an active area of the laser rangefinder receiver module.

23. The optical payload of claim **22**, further comprising:

a signal processor in communication with the laser rangefinder receiver module and configured to determine a range from the optical payload to the target area based on the energy directed by the fiber optic element to the laser rangefinder receiver module; and

a beam splitter, wherein the beam splitter and the first and second optical elements are configured to direct the laser target designator beam from the laser target designator module to the large aperture telescopic lens system and to direct the energy of the pulsed laser rangefinder beam that is reflected by the target area and collected by the large aperture telescopic lens system to the laser rangefinder receiver module, and wherein the beam splitter comprises a dichroic filter configured with a maximum spectral transmission substantially matched with a spectral emission of the designator laser and further configured with a maximum spectral reflectance substantially matched with the spectral emission of the rangefinder laser.

24. The optical payload of claim **23**, wherein the rangefinder laser comprises an Erbium glass rod having a spectral output in the range of 1500 to 1800 nanometers, wherein the designator laser comprises a neodymium-doped yttrium aluminum garnet laser crystal having a spectral output substantially centered at 1064 nanometers, and wherein the laser rangefinder transmitter module and the laser target designator module are mechanically independent modules.

* * * * *