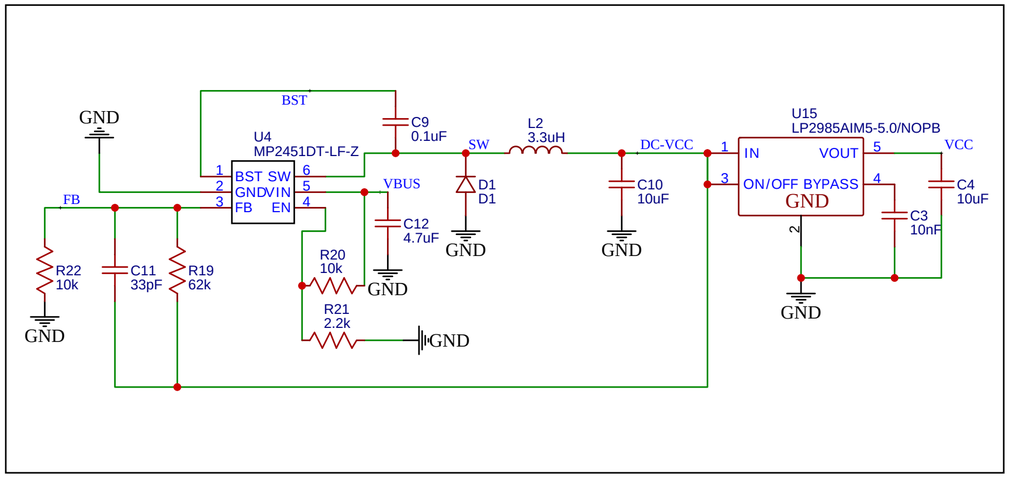

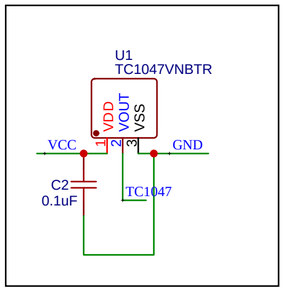

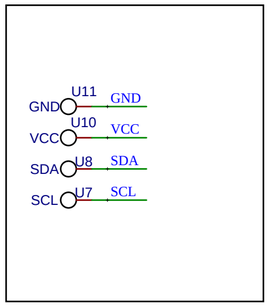

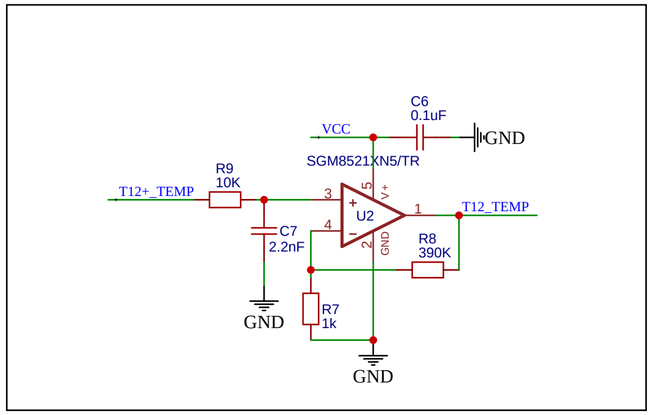

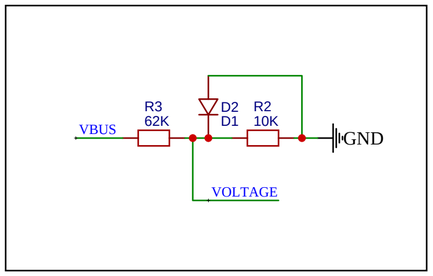

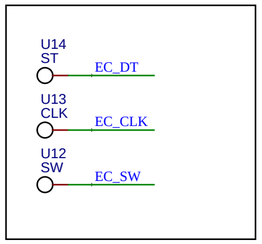

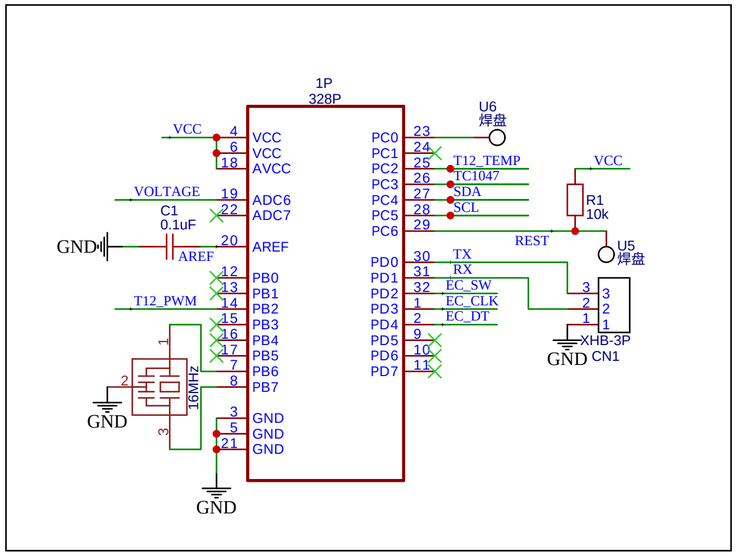

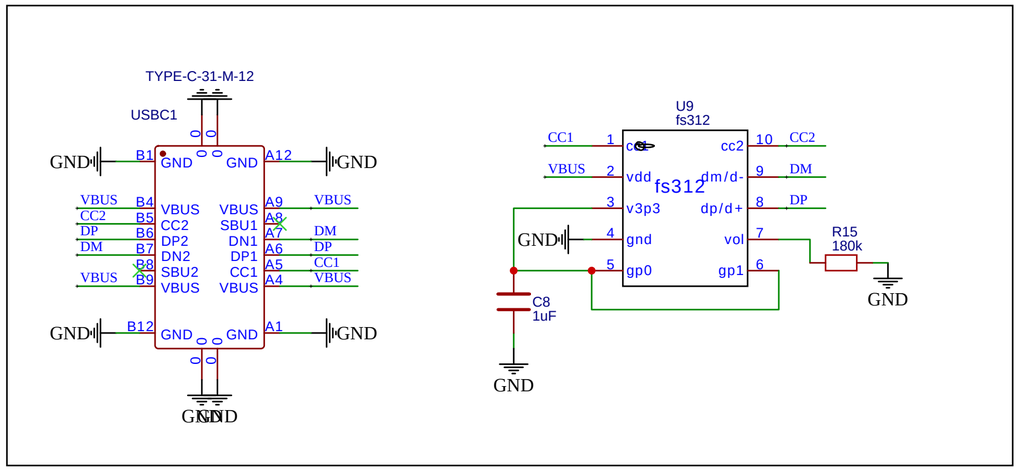

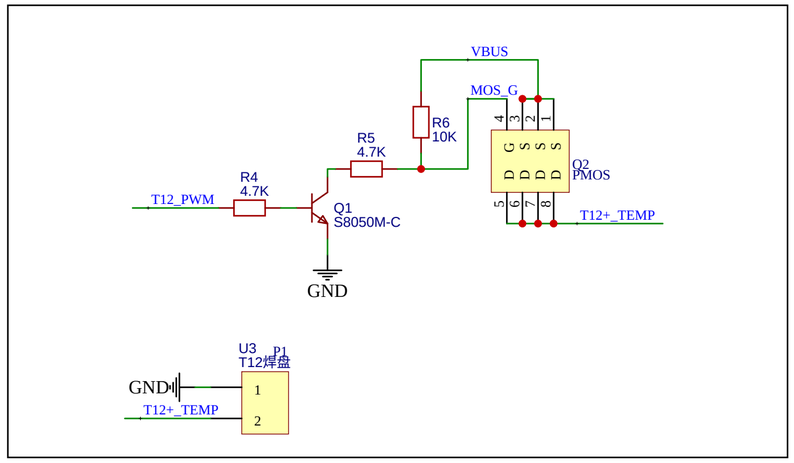

TITLE: Sheet_1		REV: 1.0
立创EDA	Company: _樱下小渚花田汐_	Sheet: 1/1
	Date: 2020-11-30 Drawn By: _樱下小渚花田汐_	